BARTOW COUNTY FIRE STATION NO. 9
BATTALION HEADQUARTERS

Bartow County Government

RE-BID DOCUMENTS
AUGUST 6, 2015

CODE INFORMATION:

The following Building Codes, along with all reference Codes, are currently applicable to all Commercial Projects in Georgia:

IBC - International Building Code - 2012 Edition, with Georgia Amendments
IFC - International Fire Code - 2012 Edition, with Georgia Amendments
IMC - International Mechanical Code - 2012 Edition, with Georgia Amendments
IPC - International Plumbing Code - 2012 Edition, with Georgia Amendments
IFGC - International Fuel Gas Code - 2012 Edition, with Georgia Amendments
NEC - National Electric Code - 2011 Edition, with Georgia Amendments

IECC - International Energy Conservation Code, 2009 Edition, with Georgia Amendments
Georgia Accessibility Code - 120-3-20, June 25, 1997
Americans with Disabilities Act - 2010

NFPA 101 - Life Safety Code - 2012 Edition, with Georgia Amendments

FIRE STATION - BARTOW COUNTY NO. 9

Structure is a one-story load-bearing exterior masonry wall structure with slab-on-grade construction and metal truss framing system. The building is approximately 8,615 gross square feet.

OCCUPANCY: Business (IBC Section 304), Storage Group S-1 - Apparatus Bay (IBC Section 311.2)

Construction Type: IIB
IBC T503 - Allowable height and area for Type IIB Construction is as follows:

Business -	4 Story, 23,000 s.f.
Storage S-1 -	3 Story, 17,500 s.f.

Occupancy Separations are 1-hour between all occupancies (IBC T508.3.3). Building is sprinklered, reduced from 2hr requirement.

Occupant Load Calculations - (IBC 1004)

Business Occupancy -	2,845 square feet divided by 100/gross =	29 Occupants
Storage Occupancy -	4,780 square feet divided by 200/gross =	24 Occupants
Accessory spaces (per 508.3.1) - Training:	300 square feet divided by 20 =	15 Occupants
TOTAL OCCUPANT LOAD		68 OCCUPANTS

Occupant Egress Requirements -
68 occupants x .2" = 13.6 inches (32 inches provided)

All Exit Signs, Emergency Lighting, Smoke Detection and other systems to meet all IBC and NFPA Requirements.

Travel Distance (IBC 1016.1) Does not exceed 200 feet.

Corridors meet requirements of IBC Chapter 10.

Portable Fire Extinguishers to be provided per IBC 906
Detection and Fire alarm to be provided per IBC 907

Means of Egress shall be illuminated per IBC 1006
Exit Signs shall be provided per IBC 1011

Common Path of Travel shall not exceed 75 feet.
Travel Distance shall not exceed 200 feet.

NOTE: BUILDING DOES NOT HAVE FIRE ALARM SYSTEM BUT A NOTIFICATION SYSTEM FOR OCCUPANTS ONLY.

PROJECT LOCATION MAP

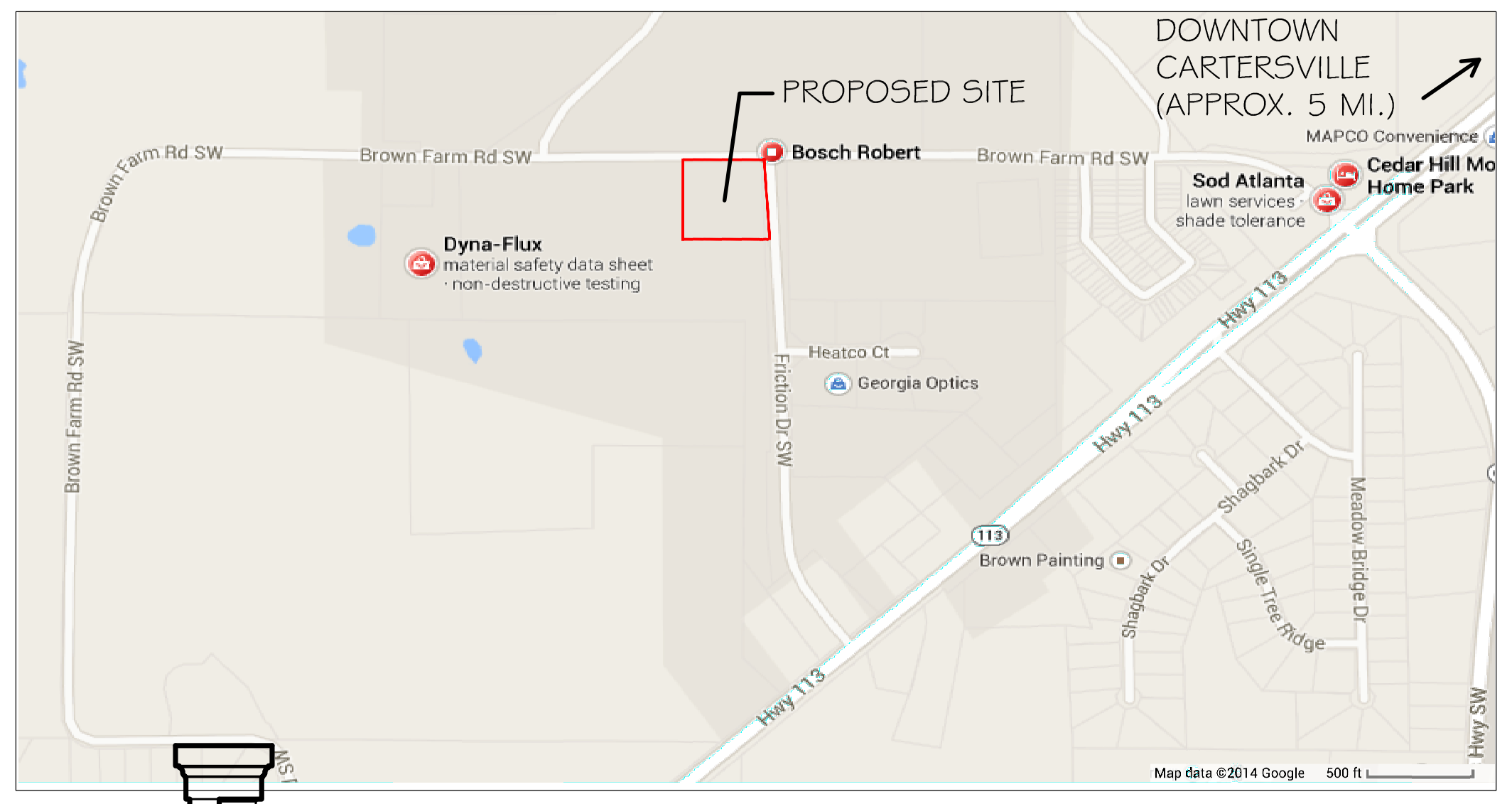

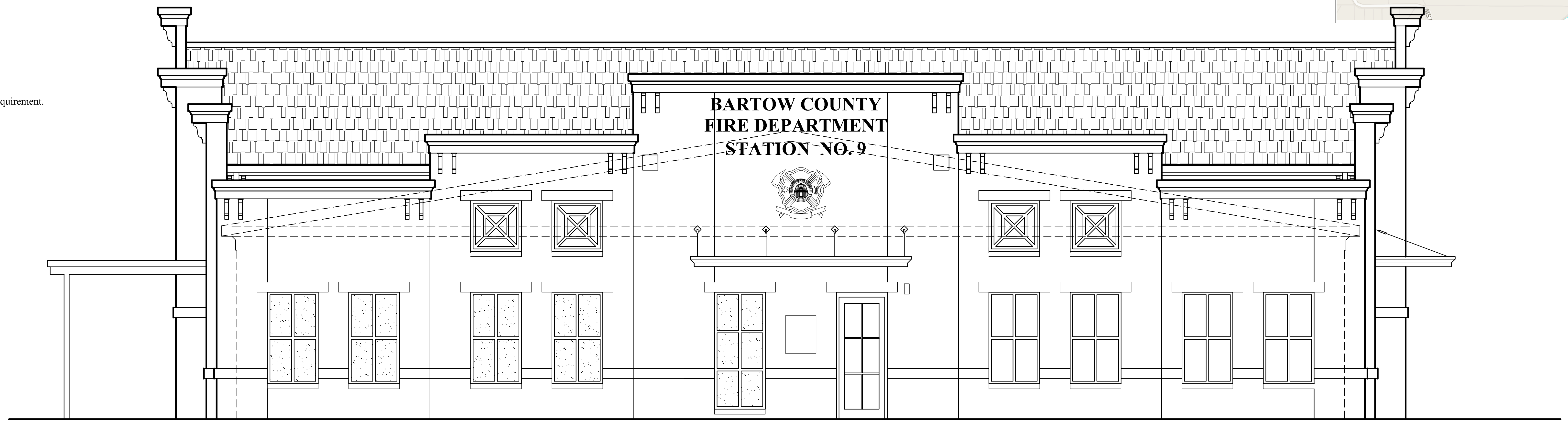

NOTE: SPRINKLER

1. CONTRACTOR TO SUBMIT ENGINEER DESIGNED AUTOMATIC FIRE SPRINKLER SHOP DRAWINGS TO ARCHITECT AND FIRE MARSHAL FOR APPROVAL. CONTRACTOR IS TO PROVIDE COMPLETE SYSTEM PER NFPA 13, INCLUDING IN GROUND CONCRETE VAULT WITH ELECTRONIC MONITORING, DIGITAL CONTROL VALVES, PIV, CHECK VALVES, ETC.. PROVIDE HYDRAULIC CALCULATIONS, DEVICE CUT SHEETS, PUMP SPECIFICATIONS, ETC.

2. CONTRACTOR TO VERIFY AS BUILT CONDITIONS AND MODIFY SYSTEM DURING SHOP DRAWING OR IN-FIELD AS REQUIRED TO MEET FIRE MARSHAL APPROVAL AND INSPECTION.

3. SPRINKLER HEADS ARE TO BE RECESSED HEADS WITH ESCUTCHEON PLATES.

4. SEE SPECIFICATION FOR ADDITIONAL SPRINKLER SYSTEM INFORMATION

LIST OF DRAWINGS:

INFORMATION

A-0	COVER
A-0.1	INFORMATION SHEET

CIVIL :

C-0	COVER
C-1	SITE AND LANDSCAPE PLAN
C-2	GRADING PLAN
C-3	UTILITY PLAN
C-4.1	EROSION CONTROL PLAN - PHASE 1
C-4.2	EROSION CONTROL PLAN - PHASE 2
C-4.3	EROSION CONTROL PLAN - PHASE 3
C-4.4	COMPREHENSIVE MONTORING PLAN
C-5.1	CONSTRUCTION DETAILS
C-5.2	CONSTRUCTION DETAILS

STRUCTURAL

S-1.1	FOUNDATION PLAN
S-1.2	FOUNDATION DETAILS
S-1.3	REINFORCING PLAN AND SPECIFICATIONS

ARCHITECTURAL

A-1.1	FLOOR PLAN
A-2.1	FRONT (NORTH) AND SIDE (EAST) ELEVATIONS
A-2.2	REAR (SOUTH) AND SIDE (WEST) ELEVATIONS
A-3.1	TRANSVERSE SECTION
A-3.2	WALL SECTIONS
A-3.3	APPARATUS BAY WALL SECTIONS
A-3.4	WINDOW AND DOOR SECTIONS
A-3.5	WALL SECTIONS
A-3.6	ALUMINUM CANOPY DETAILS - PORCH DETAILS
A-3.7	INTERIOR DOOR SECTIONS AND SITE SIGN
A-3.8	MECHANICAL AND DUMPSTER SCREENWALL
A-4.1	INTERIORS, MILLWORK AND SHOWER DETAILS
A-5.1	ROOF FRAMING PLAN
A-6.1	REFLECTED CEILNG PLAN
A-7.1	ROOM FINISH AND DOOR SCHEDULES
A-7.2	ROOM FINISH AND DOOR SCHEDULE FLOOR PLAN

MECHANICAL

M-1	HVAC PLAN
M-2	HVAC GENERAL NOTES

PLUMBING

P-1	FLOOR PLAN - SANITARY & SANITARY RISER
P-2	FLOOR PLAN - WATER & WATER RISER
P-3	FLOOR PLAN - GAS
P-4	PLUMBING NOTES

ELECTRICAL

E-1	FLOOR PLAN - LIGHT
E-2	FLOOR PLAN - POWER
E-3	PANEL SCHEDULE, POWER RISER, AND WIRING SCHEDULE
E-4	ELECTRICAL NOTES

PROJECT NOTES:

1. NOTIFY ARCHITECT OF ANY DISCREPANCIES PRIOR TO PROCEEDING WITH AFFECTED WORK.
2. COORDINATE ALL WORK WITH ARCHITECTURAL AND MECHANICAL, ELECTRICAL, PLUMBING, STRUCTURAL, CIVIL, AND ALL DISCIPLINES.
3. STAGING AREA AND CONSTRUCTION ENTRANCE TO BE APPROVED BY OWNER PRIOR TO BEGINNING WORK.
4. ALL WORK TO CONFORM TO ALL LOCAL CODES AND ORDINANCES AS WELL AS SBCCI AND LIFE SAFETY CODE
5. CONTRACTOR TO PROVIDE ALL UTILITY LINES TO STREET AND ALL UTILITY CONNECTIONS AS REQUIRED FOR COMPLETE OPERATION.

   CONTRACTOR TO PROVIDE ALL SOIL AND EROSION CONTROL DURING CONSTRUCTION WORK. SOIL AND EROSION CONTROL TO BE IN ACCORDANCE WITH THE GEORGIA MANUAL FOR EROSION AND SEDIMENT CONTROL.

7. CONTRACTOR TO PROVIDE SOIL POISONING PRIOR TO PLACEMENT OF ANY CONCRETE.
8. SEE PROJECT MANUAL AND SPECIFICATIONS FOR ALL PRODUCT INFORMATION
9. CONTRACTOR TO PROVIDE TORQUE TEST ON ALL STEEL CONNECTIONS
10. CONTRACTOR TO PROVIDE COPY OF ALL LICENSES OF WELDERS WHO ARE TO WORK ON PROJECT PRIOR TO THEM STARTING.
11. PROVIDE GEORGIA PROFESSIONAL ENGINEER SEAL ON ALL TRUSS DRAWINGS AND STRUCTURAL COMPONENTS AND 8½" X 11" SEALED DRAWINGS OF ALL SITE FABRICATED TRUSSES.
12. ALL REQUIRED TESTING TO BE BY THE GENERAL CONTRACTOR INCLUDING STRUCTURAL, SOIL COMPACTION, ETC.
13. ALL CORRESPONDENCE DURING BIDDING AND CONSTRUCTION TO BE IN WRITING – DIRECT ALL QUESTIONS TO ARCHITECTS OFFICE.
14. FIRE EXTINGUISHERS AND CABINETS TO BE:

    LARSEN'S ARCHITECTURAL SERIES – SURFACE MOUNTED SOLID DOOR WITH LARSEN–LOC, #2409–SM (AT ALL CMU WALLS) WITH WHITE FINISH. PROVIDE SEMI–RECESSED SOLID DOOR WITH LARSEN–LOC #2409–R4 WITH ROLLED EDGES (AT ALL STUD WALLS) CABINETS TO BE SUPPLIED WITH MP10 EXTINGUISHERS AND #5535 BRACKETS. PROVIDE RATED CABINET AT ANY RATED WALLS. PROVIDE TYPE "K" EXTINGUISHER AT KITCHEN.
15. ALL CONCRETE BLOCK TO HAVE BLOCK FILLER APPLIED THEN PRIMER AND PAINT.
16. PROVIDE 1 YEAR (MIN.) WARRANTY FOR TERMITE TREATMENT.

GENERAL NOTES

1. ARCHITECTS APPROVAL REQUIRED:
   - REINFORCING SHOP DRAWINGS
   - STRUCTURAL STEEL SHOP DRAWINGS WITH ALL CONNECTIONS
   - HANGERS & EQUIPMENT SUPPORTS
   - CONTRACTOR SHALL COORDINATE ALL MECHANICAL OPENINGS AND ADVISE ARCHITECT OF ANY STRUCTURAL CHANGES REQUIRED.
2. STRUCTURAL FRAMING DETAILS SHALL INCLUDE:
   - ALL FLOOR OPENINGS GREATER THAN 12" SQUARE SHALL BE FRAMED WITH 3 x 3 x 3/16 ANGLE U.N.O. WITH #3 BAR EXTENDING 3'–0" PAST OPENING EACH SIDE AND #3 x 3'–0" LONG AT EACH CORNER.
   - ALL ROOF OPENINGS GREATER THAN 12" SQUARE SHALL BE FRAMED WITH 4 x 3 x 3/16 ANGLE U.N.O.

PROTECTION SYSTEM NOTES:

1. ALL MEP TO CONFORM TO NFPA 75. SEE CHAPTER 10.
2. NFPA 75 - 5.3.2 REQUIRES A FLOOR DRAIN IN THE EQUIPMENT ROOM.
3. AUTOMATIC DETECTION SYSTEM TO PROVIDE EARLY WARNING OF FIRE. NFPA 72.
4. PORTABLE EXTINGUISHERS ARE REQUIRED THROUGHOUT AT EVERY 75 FEET
5. A/C UNITS TO HAVE SHUT DOWN WHEN FIRE SUPPRESSION IS ACTIVATED.
6. ALL ELECTRICAL TO CONFORM TO NFPA 70.

ISSUED FOR CONSTRUCTION. DATE: 7 / 31 / 14

REVISIONS

Number	Date:	Remarks:	Number	Date:	Remarks:
X	00-00-00	N/A			

CONSULTANTS

CARTER WATKINS ASSOCIATES ARCHITECTS, INC.
POST OFFICE BOX 1004
137 EAST WASHINGTON STREET
MONROE, GEORGIA 30655
Fax: 770/267-1064
email@carterwatkins.com www.carterwatkins.com

SEAL
BENJAMIN MERCER CARTER

BARTOW COUNTY FIRE
STATION NO. 9
Battalion Headquarters

SHEET TITLE: COVER

PRINTED:

NUMBER: A-0

ABBREVIATIONS

A.C.T.	ACOUSTICAL CEILING TILE
A.F.F.	ABOVE FINISH FLOOR
ALUM.	ALUMINUM
BD.	BOARD
C J	CONTROL JOINT
C.L.	CENTER LINE
CMU	CONCRETE MASONRY UNIT
COL.	COLUMN
CONC.	CONCRETE
CONT.	CONTINUOUS
CORR.	CORRIDOR
D.F.	DRINKING FOUNTAIN
DIA., DIAM.	DIAMETER
D.S.	DOWNSPOUT
E J	EXPANSION JOINT
ELEC.	ELECTRICAL
EQUIP.	EQUIPMENT
E.W.	EACH WAY
F.D.	FLOOR DRAIN
F.E.	FIRE EXTINGUISHER & CABINET
FIN.	FINISH
FTG.	CONCRETE FOOTING
GALV.	GALVANIZED
GYP.	GYPSUM
H.C.	HANDICAP
H.M.	HOLLOW METAL
HORIZ.	HORIZONTAL
HT.	HEIGHT
INSUL.	INSULATION
JAN.	JANITOR
JT., JTS.	JOINT, JOINTS
LAM.	LAMINATE
LB.	POUND
MAX.	MAXIMUM
MECH.	MECHANICAL
MTL.	METAL
O.C.	ON CENTER
O.H.	OVERHEAD
PR.	PAIR
PT.	PAINTED
R., RAD.	RADIUS
REC.	RECESSED
SCHED.	SCHEDULE
SPEC., SPECS.	SPECIFICATIONS MANUAL
ST.	STEEL
TYP.	TYPICAL CONDITION
VERT.	VERTICAL
W/	WITH

NOTE: DETAILS SHOWN FOR TYPICAL CMU BLOCK CONSTRUCTION - MODIFY FOR QUIK BRIK AT LOCATIONS AS SHOWN ON PLAN.

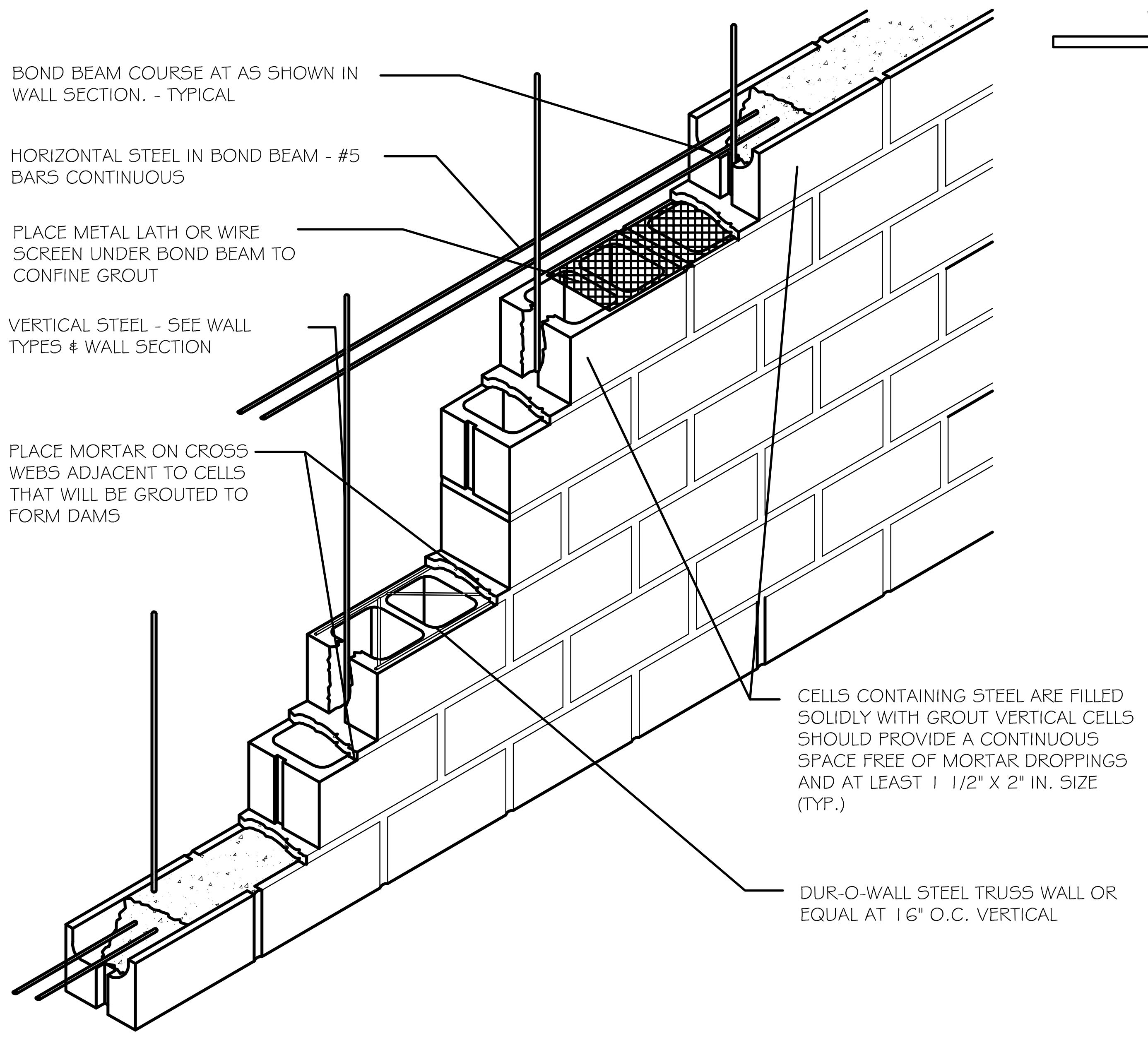
BOND BEAM COURSE AT AS SHOWN IN WALL SECTION. - TYPICAL
HORIZONTAL STEEL IN BOND BEAM - #5 BARS CONTINUOUS
PLACE METAL LATH OR WIRE SCREEN UNDER BOND BEAM TO CONFINE GROUT
VERTICAL STEEL - SEE WALL TYPES & WALL SECTION
PLACE MORTAR ON CROSS WEBS ADJACENT TO CELLS THAT WILL BE GROUTED TO FORM DAMS
CELLS CONTAINING STEEL ARE FILLED SOLIDLY WITH GROUT VERTICAL CELLS SHOULD PROVIDE A CONTINUOUS SPACE FREE OF MORTAR DROPPINGS AND AT LEAST 1 1/2" X 2" IN. SIZE (TYP.)
DUR-O-WALL STEEL TRUSS WALL OR EQUAL AT 16" O.C. VERTICAL

1 / A-0.1 REINFORCING OF MASONRY WALL
SCALE: 1" = 1'-0"

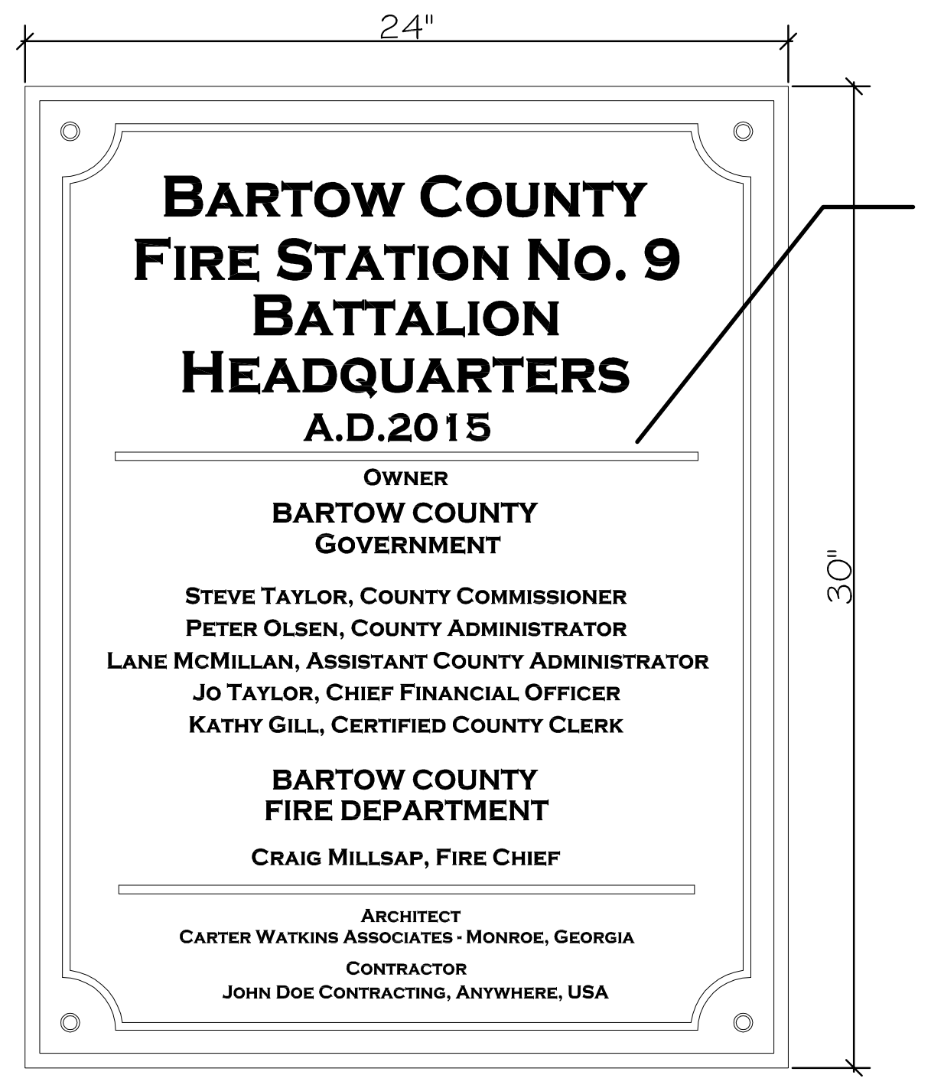

BARTOW COUNTY
FIRE STATION NO. 9
BATTALION
HEADQUARTERS
A.D.2015

OWNER
BARTOW COUNTY
GOVERNMENT

STEVE TAYLOR, COUNTY COMMISSIONER
PETER OLSEN, COUNTY ADMINISTRATOR
LANE MCMILLAN, ASSISTANT COUNTY ADMINISTRATOR
JO TAYLOR, CHIEF FINANCIAL OFFICER
KATHY GILL, CERTIFIED COUNTY CLERK

BARTOW COUNTY
FIRE DEPARTMENT

CRAIG MILLSAP, FIRE CHIEF

ARCHITECT
CARTER WATKINS ASSOCIATES - MONROE, GEORGIA
CONTRACTOR
JOHN DOE CONTRACTING, ANYWHERE, USA

BRASS PLAQUE BY A.R.K. RAMOS ARCHITECTURAL SIGNAGE OR EQUAL. NAMES AND POSITIONS TO BE VERIFIED AFTER BIDDING. FINISH AND TEXTURE TO BE SELECTED.

NOTE: LOCATE PLAQUE OUTSIDE DOOR 101A - LOBBY

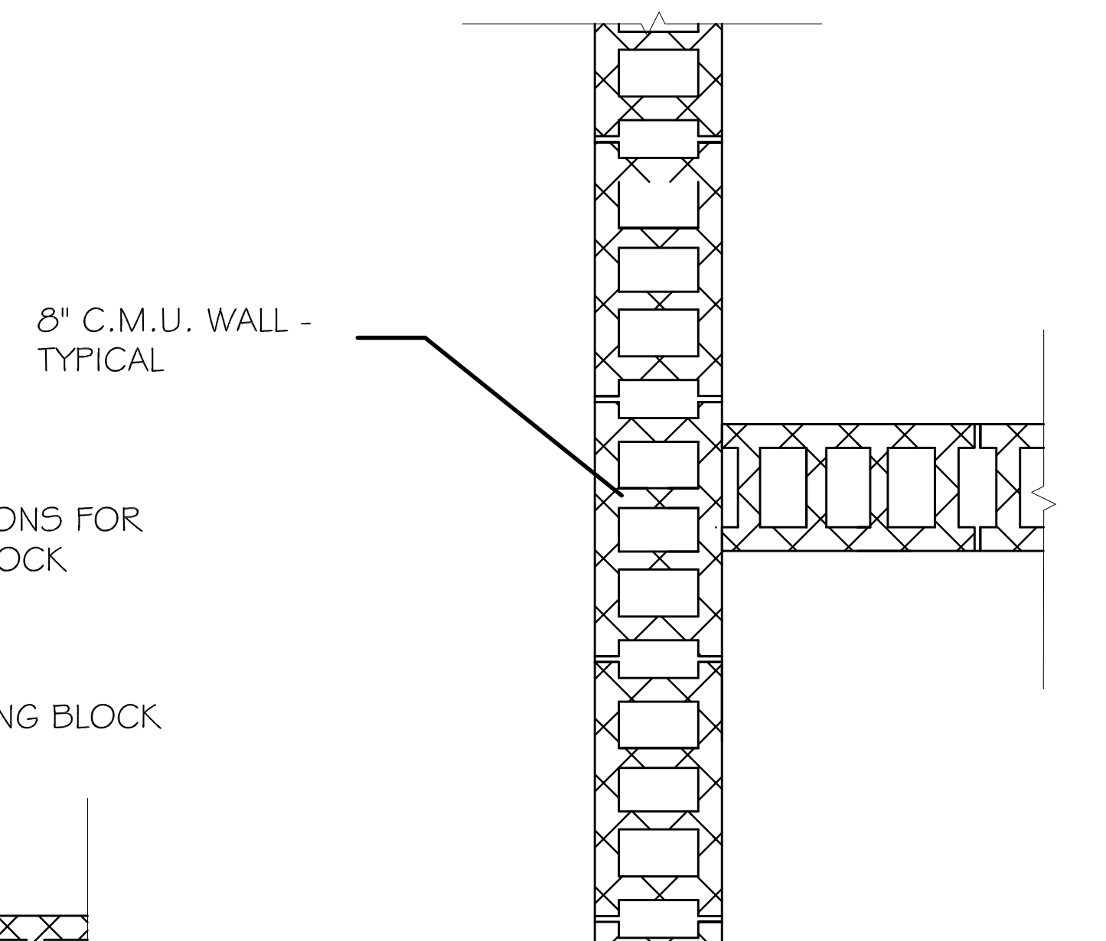
8" C.M.U. WALL - TYPICAL

3 / A-0.1 PLAN DETAIL AT NON-LOAD BEARING WALL INTERSECTION - TYP.
SCALE: 1" = 1'-0"

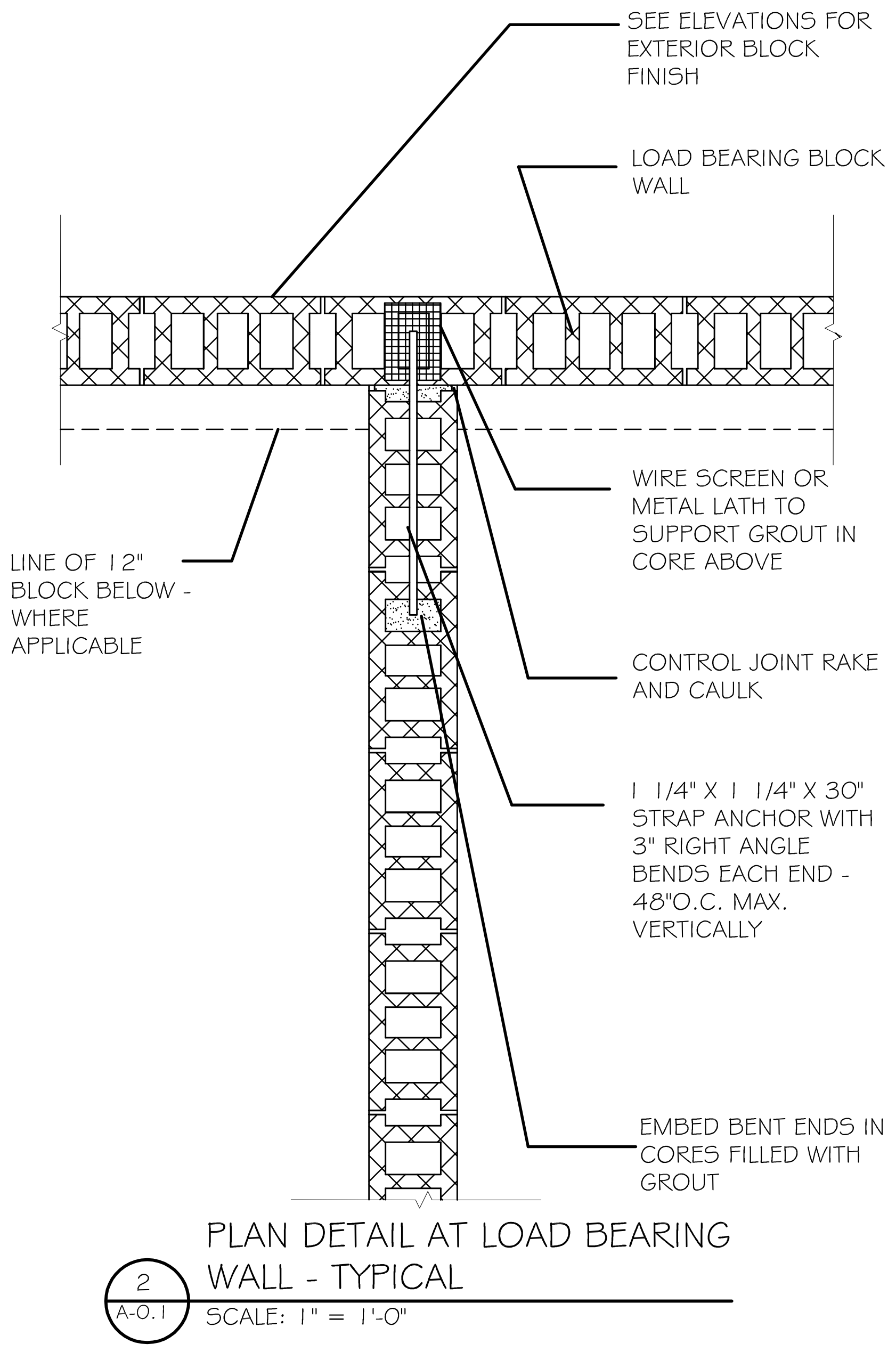
SEE ELEVATIONS FOR EXTERIOR BLOCK FINISH
LOAD BEARING BLOCK WALL
LINE OF 12" BLOCK BELOW - WHERE APPLICABLE
WIRE SCREEN OR METAL LATH TO SUPPORT GROUT IN CORE ABOVE
CONTROL JOINT RAKE AND CAULK
1 1/4" X 1 1/4" X 30" STRAP ANCHOR WITH 3" RIGHT ANGLE BENDS EACH END - 48"O.C. MAX. VERTICALLY
EMBED BENT ENDS IN CORES FILLED WITH GROUT

2 / A-0.1 PLAN DETAIL AT LOAD BEARING WALL - TYPICAL
SCALE: 1" = 1'-0"

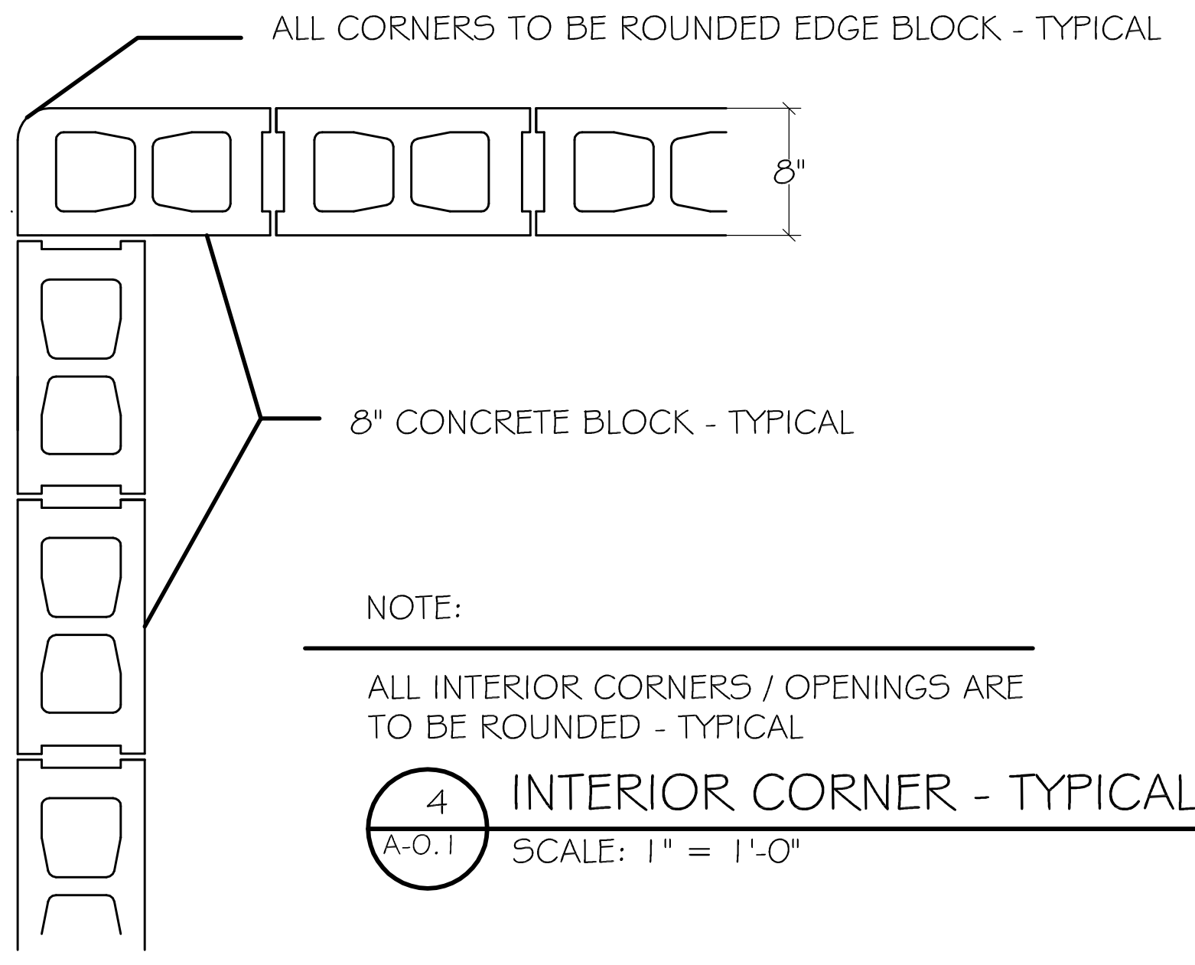
ALL CORNERS TO BE ROUNDED EDGE BLOCK - TYPICAL
8"
8" CONCRETE BLOCK - TYPICAL

NOTE:

ALL INTERIOR CORNERS / OPENINGS ARE TO BE ROUNDED - TYPICAL

4 / A-0.1 INTERIOR CORNER - TYPICAL
SCALE: 1" = 1'-0"

NOTE: DETAILS SHOWN FOR TYPICAL CMU BLOCK CONSTRUCTION - MODIFY FOR QUIK BRIK AT LOCATIONS AS SHOWN ON PLAN.

NOTE: INSTALL PER ACI CONSTRUCTION STANDARDS

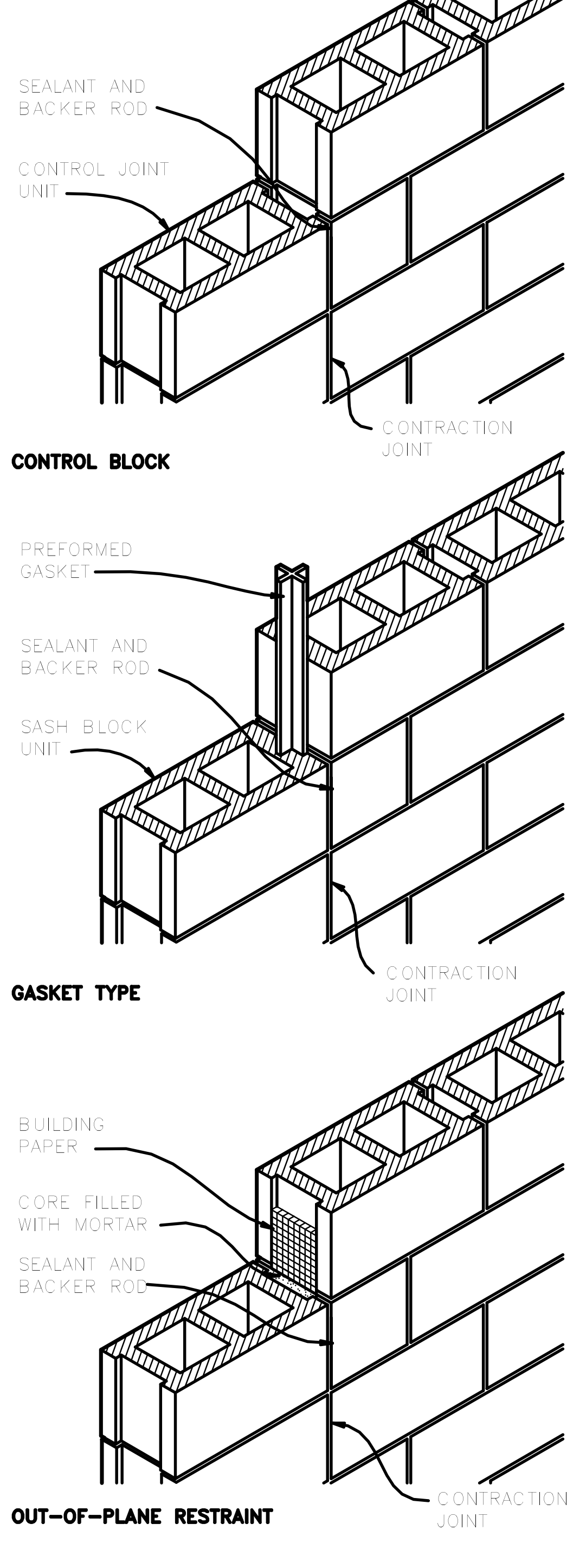
SEALANT AND BACKER ROD
CONTROL JOINT UNIT
CONTRACTION JOINT
CONTROL BLOCK
PREFORMED GASKET
SEALANT AND BACKER ROD
SASH BLOCK UNIT
CONTRACTION JOINT
GASKET TYPE
BUILDING PAPER
CORE FILLED WITH MORTAR
SEALANT AND BACKER ROD
CONTRACTION JOINT
OUT-OF-PLANE RESTRAINT

5 / A-0.1 CONTROL JOINTS IN MASONRY WALL - TYPICAL
SCALE: 1" = 1'-0"

WALL TYPES: SCALE 1" = 1'-0"

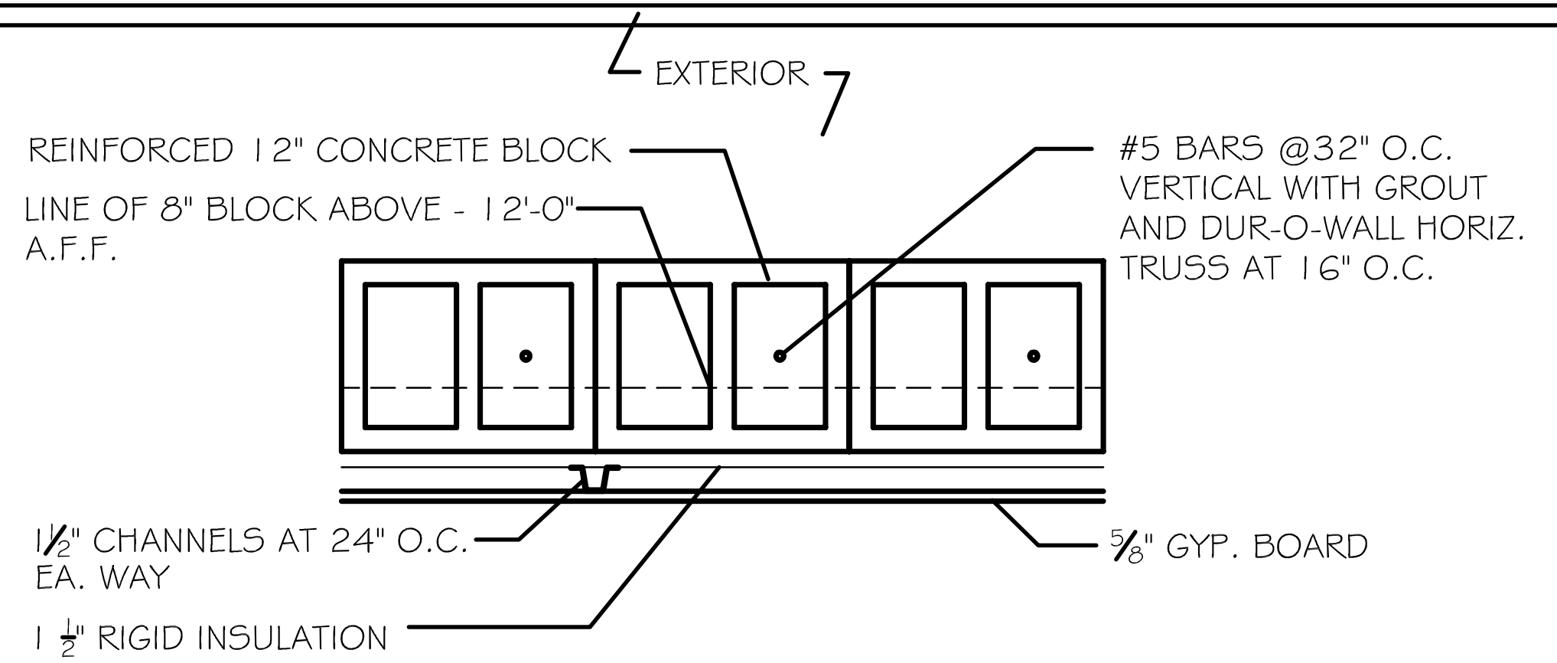
EXTERIOR
REINFORCED 12" CONCRETE BLOCK
LINE OF 8" BLOCK ABOVE - 12'-0" A.F.F.
#5 BARS @32" O.C. VERTICAL WITH GROUT AND DUR-O-WALL HORIZ. TRUSS AT 16" O.C.
1½" CHANNELS AT 24" O.C. EA. WAY
⅝" GYP. BOARD
1 ½" RIGID INSULATION

WALL TYPE 1 ⟨1⟩
EXTERIOR WALL

NOTE: ALL EXTERIOR WALLS (VISIBLE WALLS) TO BE QUIK BRIK OR EQUAL. INTERIOR WALLS TO BE STANDARD CMU.

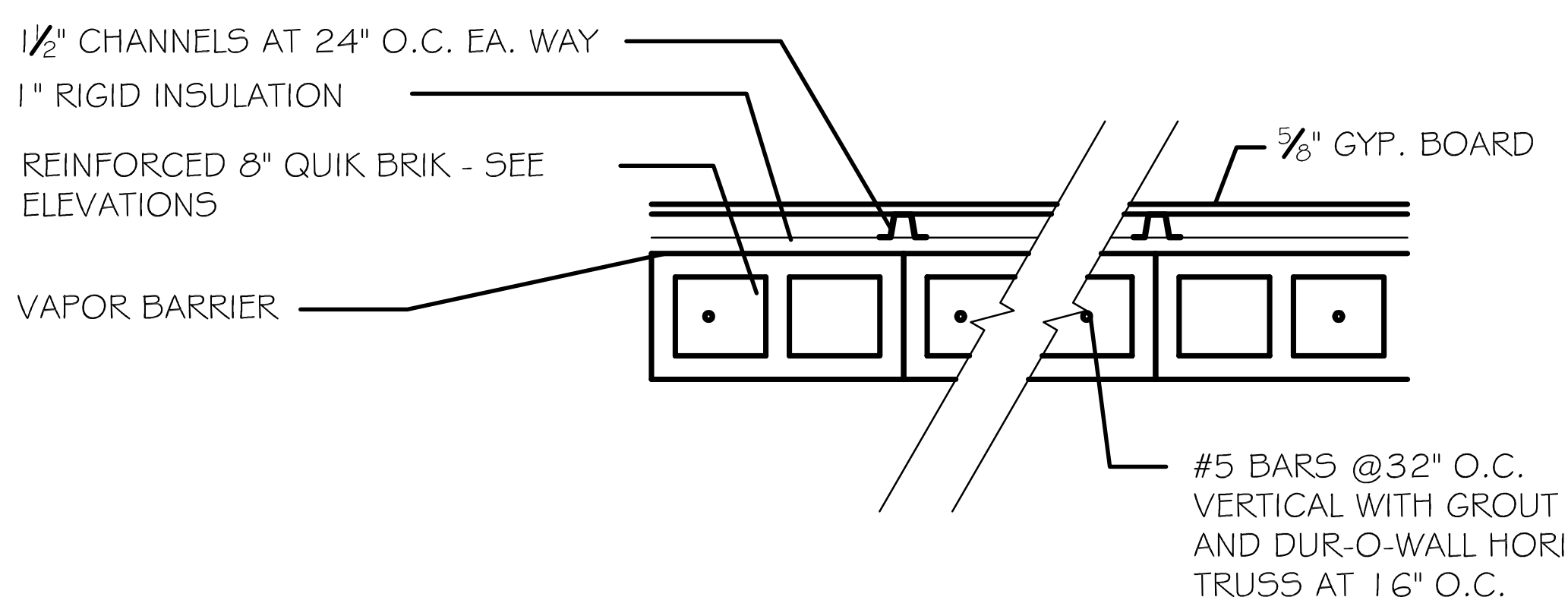
1½" CHANNELS AT 24" O.C. EA. WAY
1" RIGID INSULATION
REINFORCED 8" QUIK BRIK - SEE ELEVATIONS
VAPOR BARRIER
⅝" GYP. BOARD
#5 BARS @32" O.C. VERTICAL WITH GROUT AND DUR-O-WALL HORIZ. TRUSS AT 16" O.C.

WALL TYPE 2 ⟨2⟩
EXTERIOR WALL WITH GYP. BD. INTERIOR

NOTE: PROVIDE ROUNDED CORNERS AT ALL OUTSIDE TURNS AND OPENINGS (DOORS & WINDOWS).

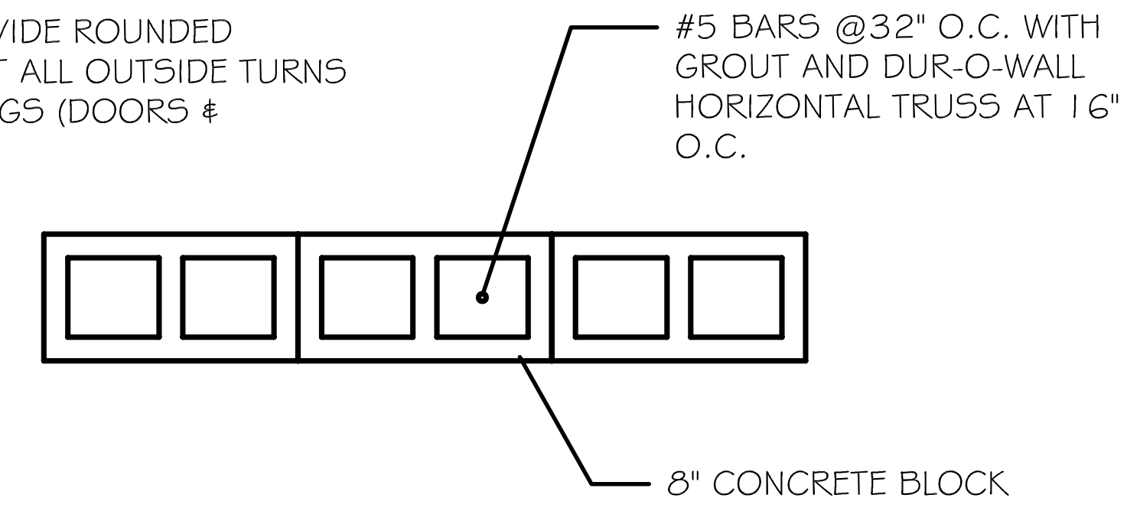
#5 BARS @32" O.C. WITH GROUT AND DUR-O-WALL HORIZONTAL TRUSS AT 16" O.C.
8" CONCRETE BLOCK

WALL TYPE 3 ⟨3⟩
INTERIOR WALL

NOTE: RETURN GYP. BD AT OPENINGS (DOORS & WINDOWS).

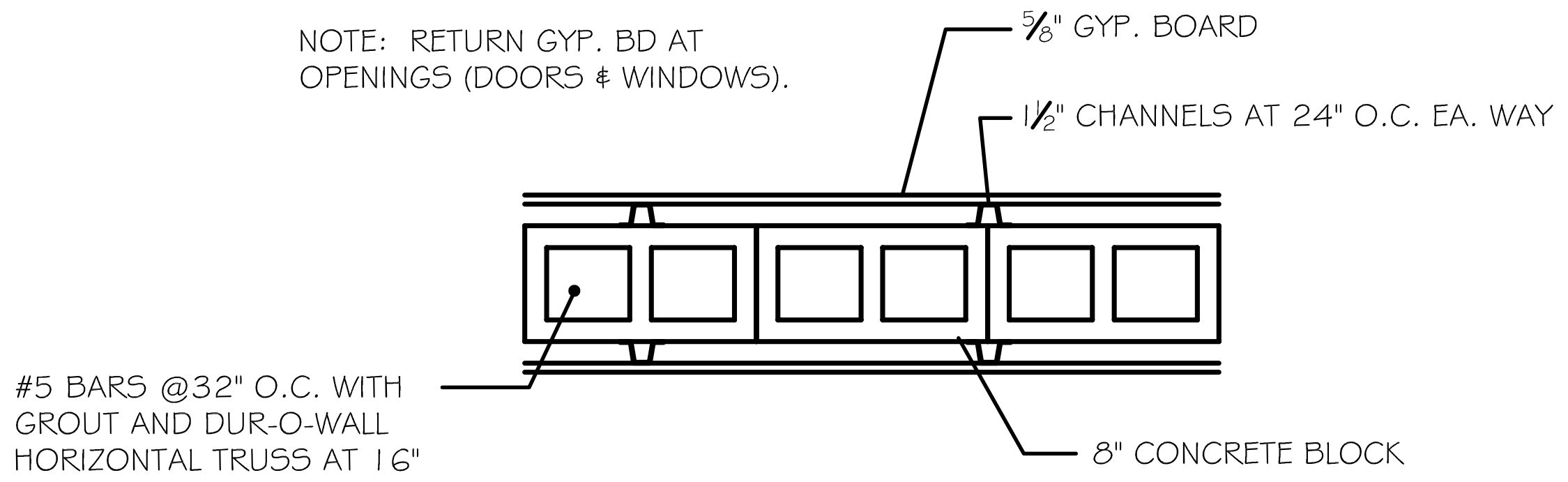
⅝" GYP. BOARD
1½" CHANNELS AT 24" O.C. EA. WAY
#5 BARS @32" O.C. WITH GROUT AND DUR-O-WALL HORIZONTAL TRUSS AT 16" O.C.
8" CONCRETE BLOCK

WALL TYPE 4 ⟨4⟩
INTERIOR WALL WITH GYP. BD. FINISH

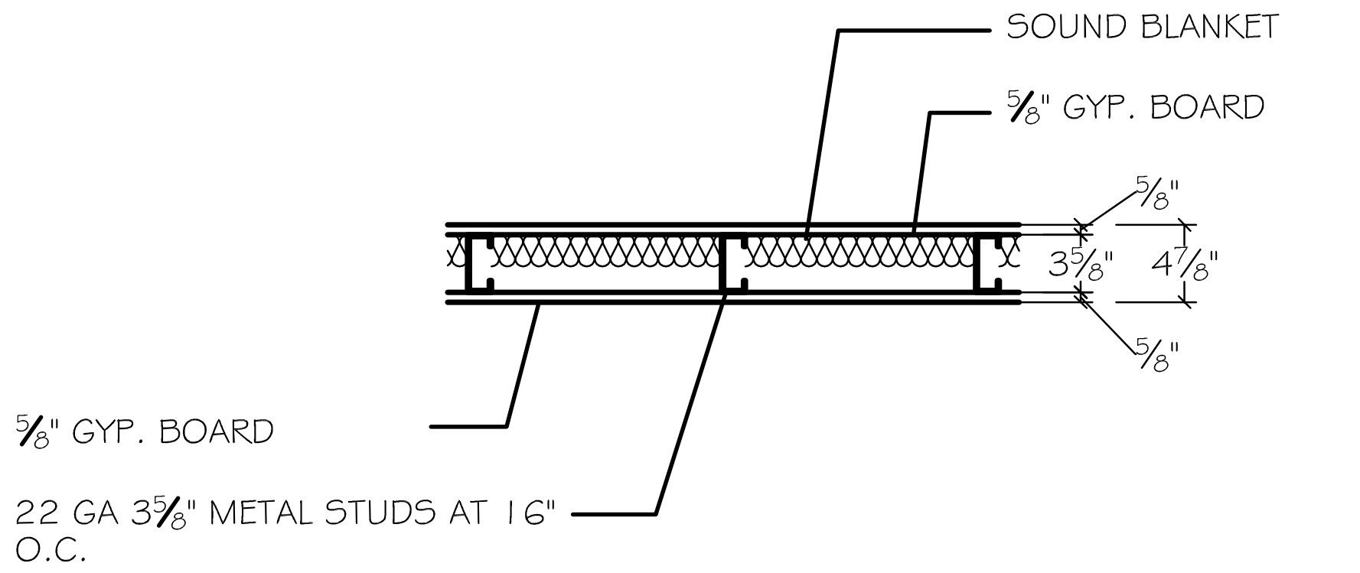
SOUND BLANKET
⅝" GYP. BOARD
⅝"
3⅝"
4⅞"
⅝"
⅝" GYP. BOARD
22 GA 3⅝" METAL STUDS AT 16" O.C.

WALL TYPE 6 ⟨6⟩
INTERIOR WALL

NOTE: PROVIDE ALL WEEPS, FLASHING, END DAMS, FOUNDATION FLASHING PER THE MASONRY INSTITUTE AND PER MANUFACTURER'S RECOMMENDATIONS

WALL TYPE 5 ⟨5⟩
NOT USED

WALL TYPE 7 ⟨7⟩
NOT USED

WALL TYPE 8 ⟨8⟩
NOT USED

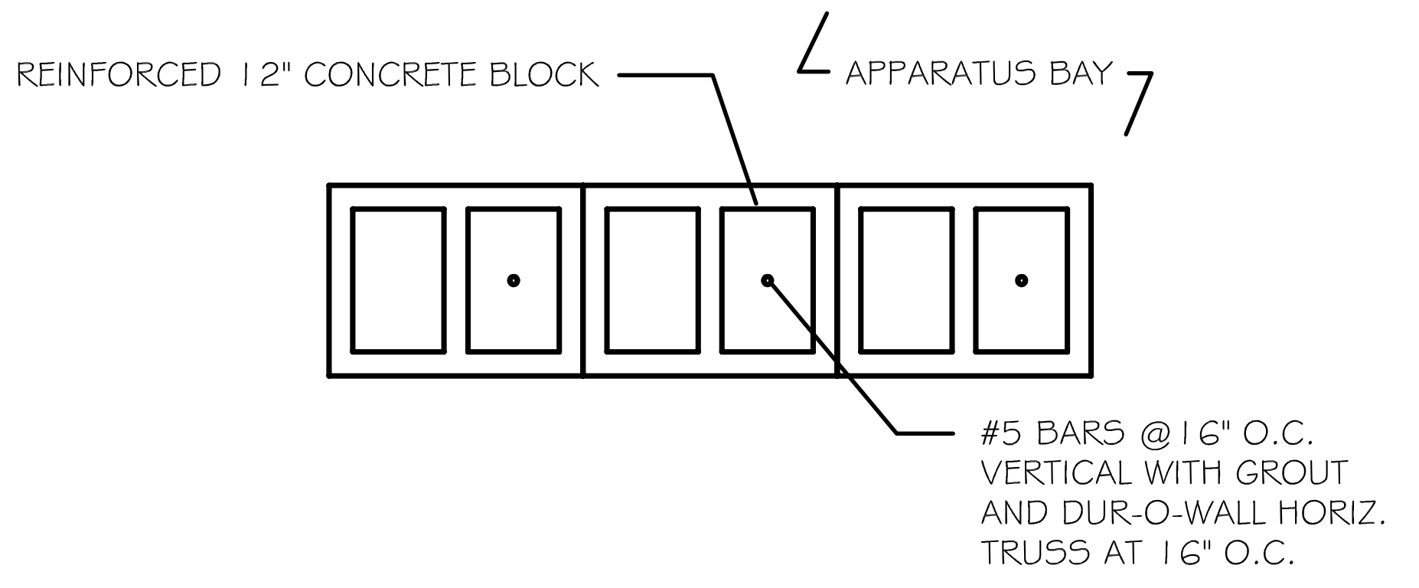
REINFORCED 12" CONCRETE BLOCK
APPARATUS BAY
#5 BARS @16" O.C. VERTICAL WITH GROUT AND DUR-O-WALL HORIZ. TRUSS AT 16" O.C.

WALL TYPE 9 ⟨9⟩
ONE-HOUR
APPARATUS BAY WALL

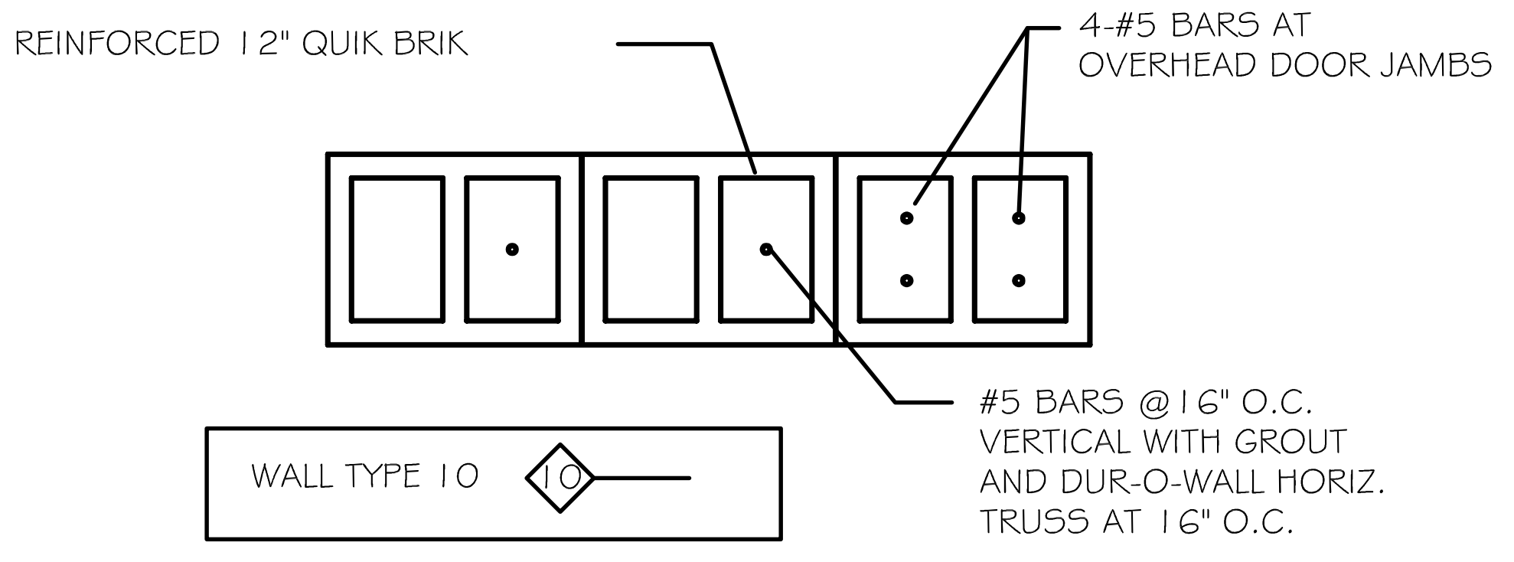
REINFORCED 12" QUIK BRIK
4-#5 BARS AT OVERHEAD DOOR JAMBS
#5 BARS @16" O.C. VERTICAL WITH GROUT AND DUR-O-WALL HORIZ. TRUSS AT 16" O.C.

WALL TYPE 10 ⟨10⟩
APPARATUS BAY WALL

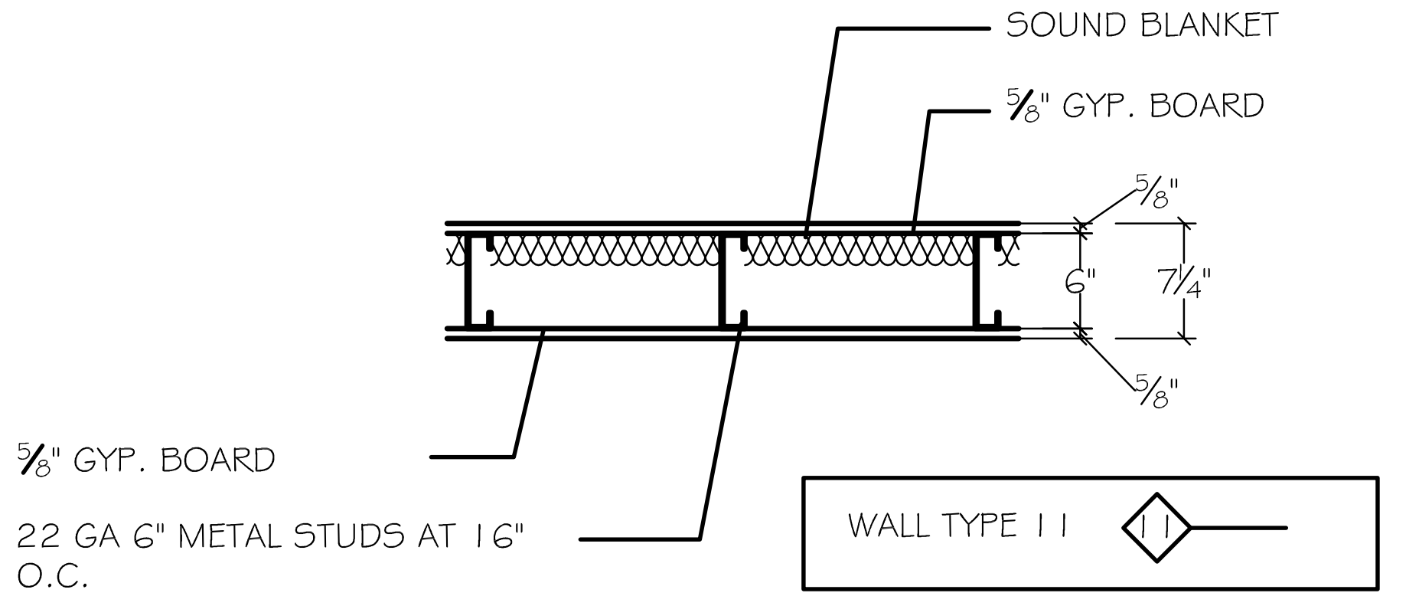
SOUND BLANKET
⅝" GYP. BOARD
⅝"
6"
7¼"
⅝"
⅝" GYP. BOARD
22 GA 6" METAL STUDS AT 16" O.C.

WALL TYPE 11 ⟨11⟩
INTERIOR PLUMBING WALL

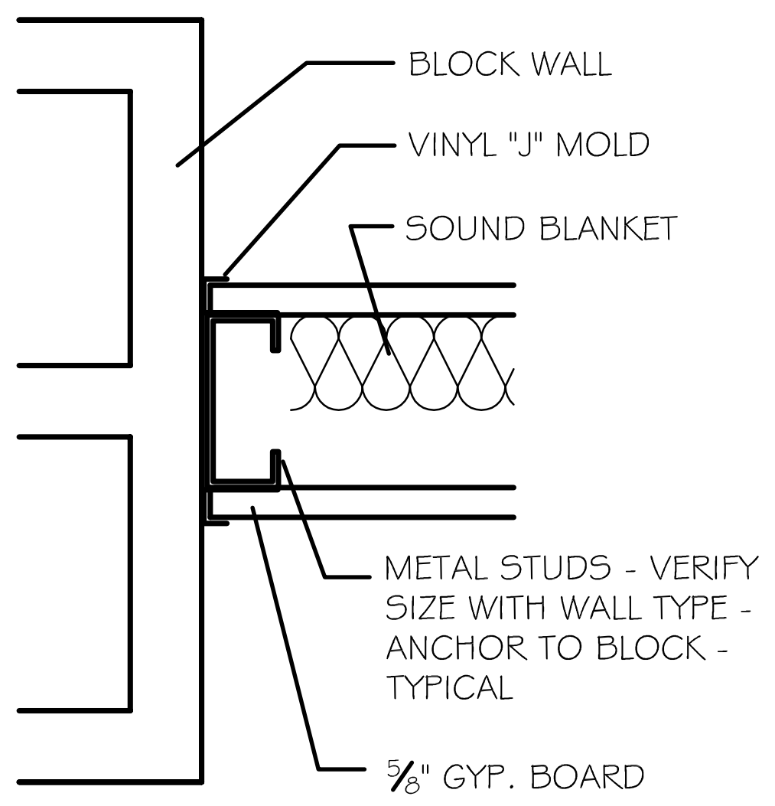
BLOCK WALL
VINYL "J" MOLD
SOUND BLANKET
METAL STUDS - VERIFY SIZE WITH WALL TYPE - ANCHOR TO BLOCK - TYPICAL
⅝" GYP. BOARD

STUD WALL / BLOCK INTERSECTION
SCALE: 3" = 1'-0"

NOTE: USE KOR-FIL INSULATION OR EQUAL IN ALL NON-GROUTED CELLS. GROUT TO BE IN ALL CELLS BELOW GRADE / FINISH FLOOR AND IN CELLS WITH REINFORCING. GROUT TO BE 3000 PSI.

REVISIONS

Number	Date:	Remarks:	Number	Date:	Remarks:
X	00-00-00	N/A			

CONSULTANTS

CARTER WATKINS ASSOCIATES
ARCHITECTS, INC.
POST OFFICE BOX 1004
137 EAST WASHINGTON STREET
MONROE, GEORGIA 30655
Fax: 770/267-1064
email@carterwatkins.com www.carterwatkins.com

SEAL
STATE OF GEORGIA
BENJAMIN MERCER CARTER
REGISTERED ARCHITECT

BARTOW COUNTY
FIRE STATION NO. 9
Battalion Headquarters

SHEET TITLE:
INFORMATION SHEET

PRINTED:

NUMBER:
A-0.1

ISSUED FOR CONSTRUCTION. DATE: 10 / 21 / 09

SOUTHLAND ENGINEERING * SOUTHLAND ENGINEERING * SOUTHLAND ENGINEERING * SOUTHLAND ENGINEERING * SOUTHLAND ENGINEERING * SOUTHLAND ENGINEERING

AS–BUILT SURVEY FOR:

FIRE STATION #9

LOCATED IN LAND LOT 856 & 857,
4TH DISTRICT, 3RD SECTION,
BARTOW COUNTY, GEORGIA

DATE: AUGUST 6, 2015	REV:	JOB NO:14167
DATE OF FIELDWORK: AUGUST 6, 2015		

SOUTHLAND ENGINEERING
CIVIL ENGINEERS - LAND SURVEYORS - LAND PLANNERS
114 OLD MILL ROAD, CARTERSVILLE, GA 30120 PH: 770.387.0440 FAX: 770.607.5151

0 15 30 60 90

SCALE: 1" = 30' GRAPHIC SCALE

LEGEND

721.00	PROPOSED GRADE
× 720.00	AS-BUILT GRADE

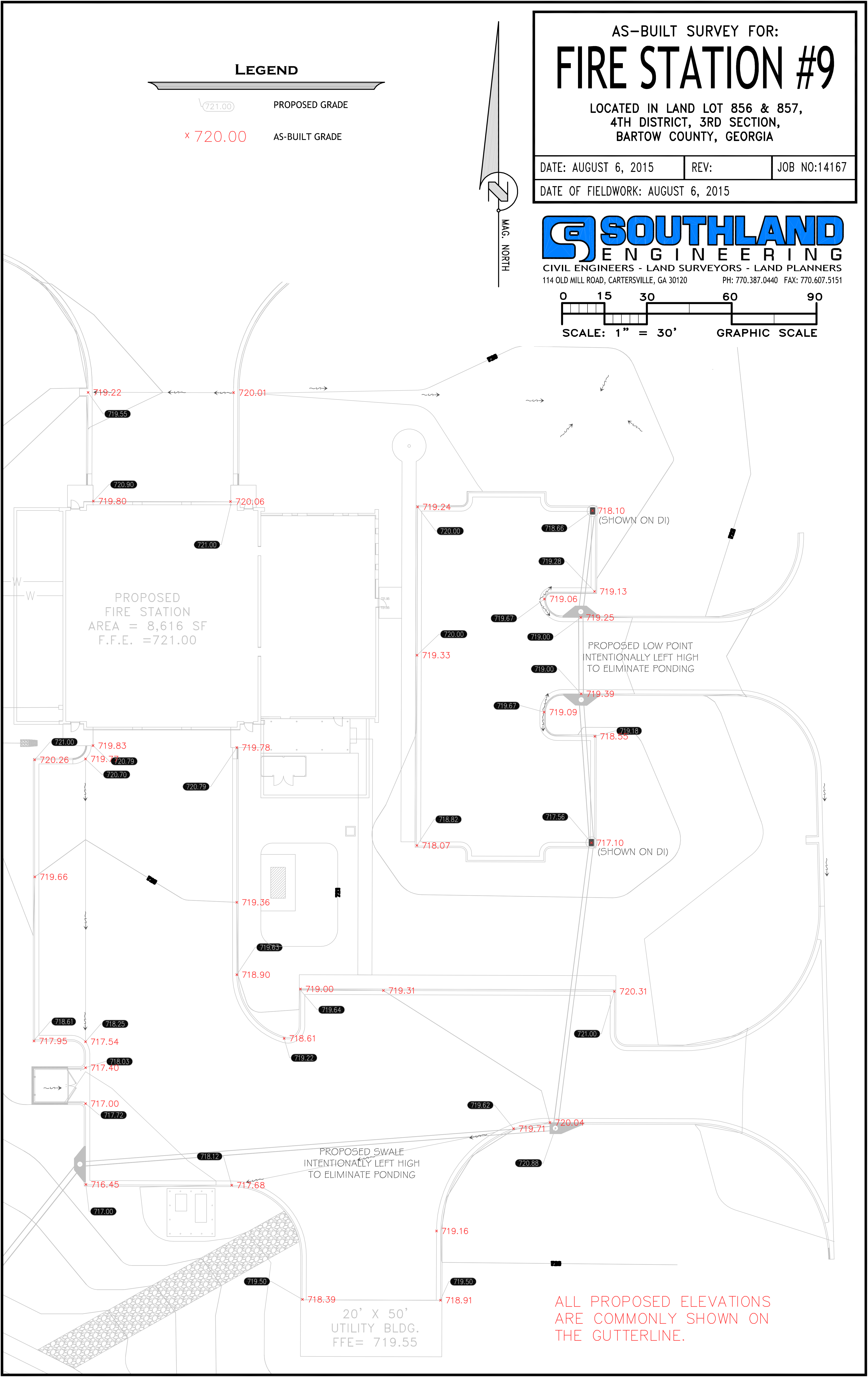
MAG. NORTH
719.22
720.01
719.55
720.90
719.80
720.06
721.00
719.24
720.00
718.10
(SHOWN ON DI)
718.66
719.28
719.13
719.06
719.67
719.25
719.00
720.00
719.33
PROPOSED LOW POINT
INTENTIONALLY LEFT HIGH
TO ELIMINATE PONDING
719.00
719.39
719.67
719.09
719.18
718.55
W
W
PROPOSED
FIRE STATION
AREA = 8,616 SF
F.F.E. =721.00
721.00
719.83
720.26
719.77
720.79
720.70
719.78
720.79
718.82
717.56
718.07
717.10
(SHOWN ON DI)
719.66
719.36
719.63
718.90
719.00
719.31
720.31
719.64
721.00
718.61
718.25
717.95
717.54
718.61
719.22
718.03
717.40
717.00
717.72
719.62
720.04
719.71
718.12
720.88
PROPOSED SWALE
INTENTIONALLY LEFT HIGH
TO ELIMINATE PONDING
716.45
717.68
717.00
719.16
719.50
719.50
718.39
718.91
20' X 50'
UTILITY BLDG.
FFE= 719.55

ALL PROPOSED ELEVATIONS
ARE COMMONLY SHOWN ON
THE GUTTERLINE.

DEVELOPMENT PLANS FOR:

BARTOW COUNTY FIRE STATION #9

LAND LOTS 856 & 857
4TH DISTRICT, 3RD SECTION
CITY OF CARTERSVILLE, GEORGIA
DATE: APRIL 28, 2015

OWNER / DEVELOPER:
BARTOW COUNTY GOV.
135 WEST CHEROKEE AVE.
CARTERSVILLE, GEORGIA 30120
TELEPHONE: 770-386-5151

SITE CONTACT INFORMATION

COMPANY	KEVIN MILLS	DESCRIPTION	PHONE
Southland Engineering	Karl Lutjens	Civil Engineering	770-387-0440
Georgia Power	Adi Patel	Power	770-387-5224
Bartow County Water Dept.	Roger Ellis	Water	770-387-5169
City of Cartersville Sewer Dept.	Terry Jordan	Sewer	770-655-2740
City of Cartersville Gas Dept.	Brian Friery	Gas	770-382-5642

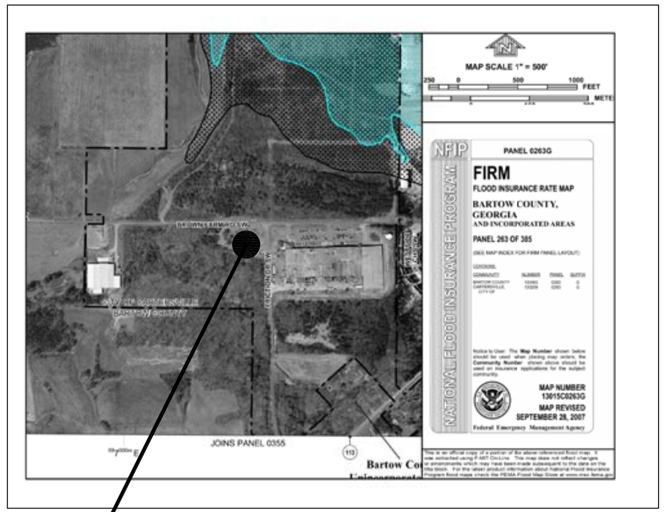
MAP SCALE 1" = 500'
FIRM
FLOOD INSURANCE RATE MAP
BARTOW COUNTY, GEORGIA AND INCORPORATED AREAS
PANEL 263 OF 385
MAP NUMBER 13015C0263G
MAP REVISED SEPTEMBER 28, 2007
Federal Emergency Management Agency
JOINS PANEL 0355

FLOOD MAP
NOT TO SCALE

NOTE: THIS SITE IS NOT LOCATED WITHIN THE 100 YEAR FLOOD PLAIN AS PER FEMA FLOOD INSURANCE MAP 13015 C 0263 G, DATED SEPT 28 2007.

SHEET INDEX

C-101 EXISTING CONDITIONS
C-201 SITE & LANDSCAPE PLAN
C-301 UTILITY PLAN
C-401 GRADING AND DRAINAGE PLAN
C-402 POND PLAN
C-501-C503 EROSION CONTROL PLANS
C-504 EROSION CONTROL NOTES
C-505-C507 EROSION CONTROL DETAILS & VEGETATION PLAN
C-508 STORM WATER POLLUTION PREVENTION PLAN
C-601 STORM & SANITARY SEWER SERVICE PROFILES
C-701-C702 CONSTRUCTION DETAILS
F1 FLOOD CROSS SECTION MAP

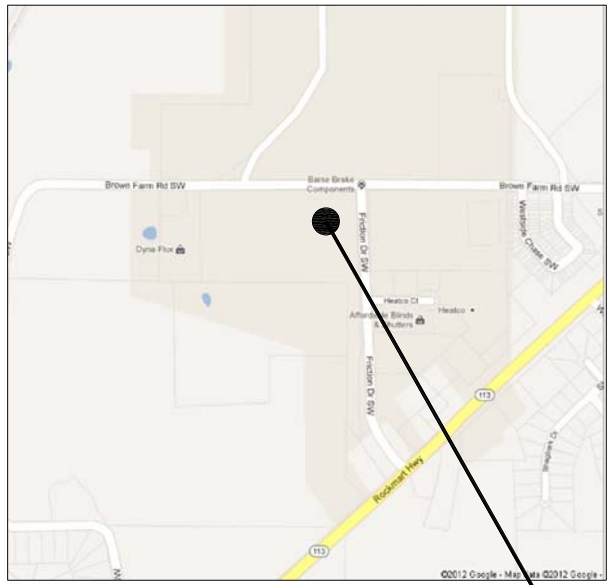

LOCATION MAP
NTS

GENERAL NOTES

ALL SILT BARRIERS MUST BE PLACED AS ACCESS IS OBTAINED DURING CLEARING. NO GRADING SHALL BE DONE UNTIL SILT BARRIER INSTALLATION IS CONSTRUCTED. SILT BARRIERS TO BE PLACED AS SHOWN AND/OR AS DIRECTED BY PROJECT ENGINEER AND/OR CITY OF CARTERSVILLE INSPECTOR. NOTIFY INSPECTOR 24 HOURS PRIOR TO CONSTRUCTION. ALL EROSION AND SEDIMENTATION CONTROLS, AND TREE PROTECTION MEASURES SHALL BE INSTALLED PRIOR TO GRADING. ACCEPTED PLANS AND SUBSEQUENT ACCEPTED REVISIONS MUST BE PRESENT ON-SITE AT ALL TIMES.

ACCEPTANCE OF THESE PLANS BY THE CITY DOES NOT RELIEVE PERMIT HOLDER FROM MEETING ALL REQUIREMENTS OF THE "CITY OF CARTERSVILLE ZONING ORDINANCE","FLOOD DAMAGE PREVENTION ORDINANCE", "SOIL EROSION AND SEDIMENTATION CONTROL ORDINANCE", THE RULES AND REGULATIONS OF THE BARTOW COUNTY HEALTH DEPARTMENT, THE US ARMY CORPS OF ENGINEERS AND ANY OTHER LOCAL, STATE, OR FEDERAL LAW OR REGULATION AS IT RELATES TO DEVELOPMENT IN THE CITY OF CARTERSVILLE.

THE LOCATION OF EROSION AND SEDIMENT CONTROL DEVICES MAY HAVE TO BE ALTERED FROM THAT SHOWN ON THE ACCEPTED PLANS DUE TO CHANGES IN DRAINAGE PATTERNS CREATED DURING CONSTRUCTION. IT IS THE OWNER/DEVELOPER'S RESPONSIBILITY TO ACCOMPLISH EROSION AND SEDIMENT CONTROL FOR ALL DRAINAGE PATTERNS CREATED AT VARIOUS STATES DURING CONSTRUCTION. ANY DIFFICULTY IN CONTROLLING EROSION OR SEDIMENT DURING ANY PHASE OF CONSTRUCTION SHALL BE REPORTED TO THE PROJECT ENGINEER IMMEDIATELY. FAILURE TO PROPERLY INSTALL, OPERATE OR MAINTAIN ALL EROSION AND SEDIMENTATION CONTROL MEASURES MAY RESULT IN ALL CONSTRUCTION BEING STOPPED UNTIL SUCH MEASURES ARE CORRECTED TO THE SATISFACTION OF THE CITY OF CARTERSVILLE INSPECTOR.

EROSION CONTROL MEASURES WILL BE INSPECTED AT LEAST WEEKLY AND AFTER EACH RAIN, AND REPAIRED BY GENERAL CONTRACTOR.

DETENTION/SEDIMENT POND(S) AND DIVERSION DITCHES SHALL BE INSTALLED IMMEDIATELY AFTER CLEARING FOR ROADWAY CONSTRUCTION. DETENTION POND(S) SHALL BE RETROFITTED FOR SILTATION CONTROL. ENGINEER SHALL IMMEDIATELY FOLLOW-UP WITH AS-BUILT CERTIFICATION FOR DESIGN COMPLIANCE PRIOR TO ACCEPTANCE OF FINAL PLAT.

OWNER AGREES BY IMPLEMENTATION OF THESE PLANS THAT ALL LAND CLEARING, CONSTRUCTION, DEVELOPMENT AND DRAINAGE ACTIVITIES WILL BE DONE ACCORDING TO THESE ACCEPTED PLANS OR PREVIOUSLY ACCEPTED REVISIONS. OWNER ACKNOWLEDGES THAT ACCEPTANCE OF PLANS BY THE CITY IN NO WAY RELIEVES OWNER OF RESPOSIBILITY NOT TO ADVERSELY IMPACT DOWNSTREAM PROPERTY REGARDING ANY LAND DISTURBING ACTIVITY, EROSION AND SEDIMENT CONTROL MEASURE AND/OR STORMWATER MANAGEMENT ACTIVITY DURING OR AFTER CONSTRUCTION. OWNER ACKNOWLEDGES THAT THE ACCEPTANCE OF THESE PLANS AND THE ISSUANCE OF THIS LAND DISTURBANCE PERMIT DOES NOT IN ANY WAY SUGGEST THAT ALL OTHER REQUIREMENTS FOR THE LEGAL OR APPROPRIATE OPERATIONS FOR THIS ACTIVITY, WHICH MAY REQUIRE ADDITIONAL PERMITTING OR APPROVALS MAY BE NECESSARY IF ANY TO OPERATE FROM THIS POINT IN AN APPROPRIATE AND LEGAL MANNER. PLAN ACCEPTANCE OR PERMIT ISSUANCE DOES NOT ABSOLVE THE APPLICANT FROM COMPLYING WITH ALL APPLICABLE LAWS, POLICIES, STANDARDS OR OTHER PERMITS WHICH MAY BE REQUIRED FOR THIS PROJECT.

ANY AND ALL LAND DISTUBANCE PERMITS MAY BE REVOKED AT ANY TIME IF THE CONSTRUCTION OF PROJECT IS NOT IN STRICT ACCORDANCE WITH ACCEPTED PLANS.

DRAINAGE EASEMENTS WILL BE PROVIDED ALONG ALL CONCENTRATED DRAINAGE PATHS A MINIMUM WIDTH OF 20'. REQUIRED WIDTHS AND LOCATIONS WILL BE REFERENCED AND SHOWN ON FINAL PLAT. PROPOSED DRAINAGE DITCHES WILL BE PROVIDED WITH PRIVATELY OWNED EASEMENTS AND ARE TO BE MAINTAINED AND PROTECTED BY INDIVIDUAL LOT OWNERS. NOTICE OF SAME SHALL BE INCLUDED ON FINAL PLAT AND SUBSEQUENT DEEDS OF CONVEYANCE FROM THE DEVELOPER TO THE INDIVIDUAL LOT OWNERS. OPEN DRAINAGE DITCHES SHALL BE 4:1 SIDE SLOPES OR FLATTER AND FALL ENTIRELY WITHIN EASEMENT. RESIDENTIAL FENCES AND OTHER FLOW OBSTRUCTIONS AR NOT ALLOWED WITHIN DRAINAGE EASEMENTS.

THE PERFORMANCE OF ALL STORM WATER DRAINAGE SYSTEMS INCLUDING DETENTION FACILITIES HAVE BEEN CHECKED USING THE 100-YEAR STORM (DEVELOPED CONDITION) FOR EVALUATION OF LOCAL FLOODING AND POSSIBLE FLOOD HAZARDS TO ADJACENT STRUCTURES AND/OR PROPERTY. THE CUMULATIVE EFFECT OF THE PROPOSED DEVELOPMENT, WHEN COMBINED WITH ALL OTHER EXISTING AND ANTICIPATED DEVELOPMENT WILL NOT INCREASE THE WATER SURFACE ELEVATION OF THE BASE FLOOD MORE THAN ON FOOT AT ANY POINT WITHIN THE COMMUNITY.

IF ACTUAL SITE CONDITIONS VARY FROM ACCEPTED PLANS, IT IS THE OWNER/DEVELOPERS RESPONSIBILITY TO INFORM THE ENGINEER OF RECORD AND THE CITY ZONING ADMINISTRATOR FOR ASSESSMENT OF CONDITION. PROJECT CONSTRUCTION MAY BE DELAYED DURING ASSESSMENT PERIOD.

ACCEPTANCE OF THESE PLANS DOES NOT CONSTITUTE APPROVAL BY THE CITY OF CARTERSVILLE OF ANY LAND DISTURBING ACTIVITY WITHIN WETLAND AREAS. IT IS THE OWNER'S RESPONSIBILITY TO CONTACT THE APPROPRIATE REGULATORY AGENCY FOR APPROVAL OF ANY WETLAND AREA DISTURBANCE.

IT IS THE OWNER'S RESPONSIBILITY TO ENSURE THAT ALL RESIDENTIAL LOTS HAVE SUFFICIENT GRADE AND ADEQUATE DRAINAGE TO PREVENT FLOODING OF PROPOSED STRUCTURES AND PERTINENT IMPROVEMENTS SUCH AS ON-SITE SEPTIC SYSTEMS. DEVELOPER SHALL NOTIFY BUILDER OF ANY SPECIAL CONDITIONS RELATING TO LOT DRAINAGE AND FLOODING POTENTIAL.

DEED RESTRICTIONS ARE REQUIRED FOR LOTS AFFECTED BY DETENTION POND(S) TO PROTECT POND FROM UNAUTHORIZED USE OR ACTIVITY. THE OWNER SHALL GRANT TO THE CITY OF CARTERSVILLE, A PERPETUAL, NON-EXCLUSIVE EASEMENT WHICH ALLOWS FOR PUBLIC INSPECTION/MAINTENANCE AND EMERGENCY REPAIR FOR THE DETENTION POND(S). THE EASEMENTS SHALL BE RECORDED WITH THE CLERK OF SUPERIOR COURT OF BARTOW COUNTY PRIOR TO ACCEPTANCE OF FINAL PLAT.

OWNER/DEVELOPER IS RESPONSIBLE FOR MAINTAINING CONTROL OF SILT ON-SITE AT ALL TIMES. DEVELOPER IS ALSO RESPONSIBLE FOR CONTROL OF SILT THAT IS TRACKED ONTO CITY R/W OR SUBDIVISION STREETS BY BUILDERS, CONTRACTORS, SUBCONTRACTORS, UTILITY COMPANIES OR ANY OTHERS DURING CONSTRUCTION UNTIL STREET HAS BEEN ACCEPTED BY THE CITY PUBLIC WORKS DEPARTMENT.

MAINTAIN A MINIMUM 2' OF COVER OVER STORM PIPES. ALL CORRUGATED METAL PIPE TO BE MAINTAINED BY THE CITY SHALL BE FULLY ASPHALT COATED. PAVED INVERTS ARE REQUIRED IN PERENNIAL STREAMS. PIPE GAGE DETERMINED BASED ON DEPTH OF COVER AND LOADING CONDITIONS.

DEBRIS FILLS ARE STRICTLY PROHIBITED AT ALL CONSTRUCTION SITES OR WITHIN ANY DEVELOPMENT. ALL WASTE AND CONSTRUCTION DEBRIS GENERATED FROM CONSTRUCTION MUST BE PROPERLY DISPOSED OF IN THE BARTOW COUNTY LANDFILL. APPROVAL OF PERMIT-BY-RULE FOR INERT LANDFILLS IS REQUIRED BY STATE D.N.R..

ALL STREET AND STOP SIGNS MUST BE INSTALLED PRIOR TO ISSUANCE OF ANY BUILDING PERMITS.

DEEDS OF DEDICATION FOR PUBLIC RIGHTS-OF-WAY, DETENTION PONDS AND ACCESS TO DETENTION PONDS MUST BE SUBMITTED PRIOR TO ACCEPTANCE OF FINAL PLAT. THE OWNER/DEVELOPER IS RESPONSIBLE FOR RECORDING SAID DEEDS AFTER ACCEPTANCE BY THE COMMISSIONER. OWNER/DEVELOPER SHALL WARRANT THE ROADS AND/OR STREETS AND DETENTION PONDS FOR A PERIOD OF ONE YEAR FROM DATE OF ACCEPTANCE.

PROPERLY EXECUTED AND RECORDED EASEMENTS AND DEEDS OF DEDICATION MUST BE PROVIDED FOR STORM WATER MANAGEMENT FACILITIES OF SINGLE FAMILY RESIDENTIAL SUBDIVISIONS PRIOR TO THE RECORDING OF THE FINAL PLAT. FOR OTHER TYPES OF DEVELOPMENT THE RESPONSIBILITY FOR MAINTENANCE AND FUNCTIONAL INTEGRITY OF SAID FACILITIES WILL REMAIN THE RESPONSIBILITY OF THE OWNER.

BEFORE STARTING ANY WORK ON THE WATER AND SEWER SYSTEM, A PRECONSTRUCTION CONFERENCE MUST BE HELD AT THE OFFICE OF THE WATER DEPARTMENT WITH THE OWNER/DEVELOPER, WATER CONTRACTOR, SEWER CONTRACTOR, AND STORM DRAINAGE AND GRADING CONTRACTORS.

CONSTRUCTION EXIT GPS LOCAITON: ⑦
LATITUDE: 34.129483 LONGITUDE: -84.859909

24 HOUR CONTACT
CRAIG MILSAP
770-387-5151

TOTAL SITE AREA = 3.51 ACRES
TOTAL AREA OF INITIAL DISTURBANCE = 1.89 ACRES
TOTAL AREA OF TOTAL DISTURBANCE = 4.70 ACRES

PROJECT NO.: 14137
DATE: 04/28/15

REVISIONS:

	DATE	DESCRIPTION
1	3/25/15	CITY SUB
2	4/01/15	OUTLET REV
3	4/27/15	2ND SUB CITY
4		
5		
6		

SOUTHLAND ENGINEERING
CIVIL ENGINEERS - LAND SURVEYORS - LAND PLANNERS
114 OLD MILL ROAD., CARTERSVILLE, GA 30120 PH: 770.387.0440 FAX: 770.607.5151

BARTOW COUNTY
FIRE STATION #9
LOCATED IN LAND LOTS 856 & 857
4TH DISTRICT, 3RD SECTION
CARTERSVILLE, GEORGIA

KARL P. LUTJENS

SHEET TITLE:
COVER

SHEET NO.:
C001

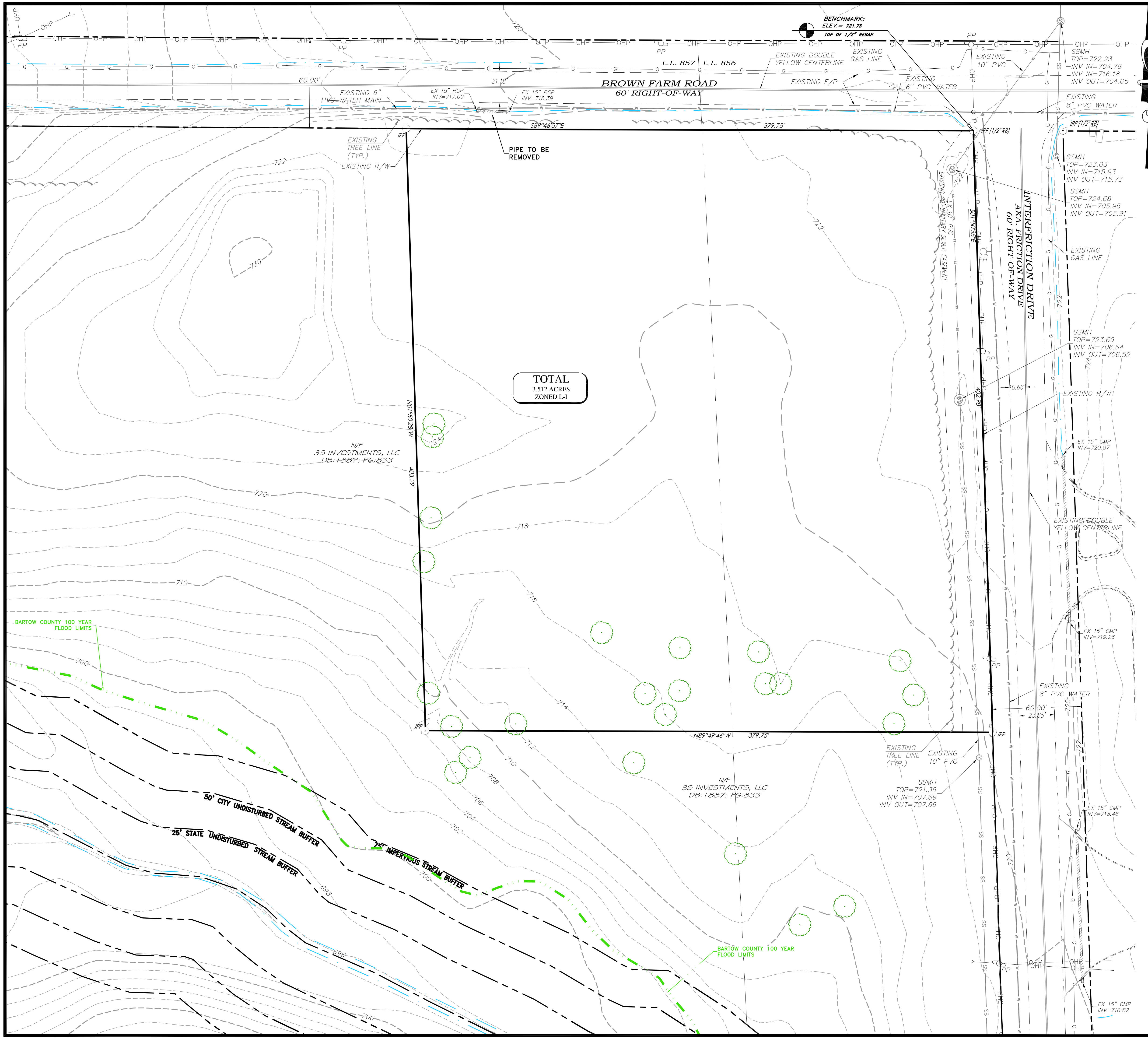
BENCHMARK:
ELEV.= 721.73
TOP OF 1/2" REBAR
L.L. 857
L.L. 856
BROWN FARM ROAD
60' RIGHT-OF-WAY
60.00'
21.18'
EXISTING 6" PVC WATER MAIN
EX 15" RCP INV=717.09
EX 15" RCP INV=718.39
EXISTING DOUBLE YELLOW CENTERLINE
EXISTING GAS LINE
EXISTING E/P
EXISTING 6" PVC WATER
EXISTING 10" PVC
S89°46'57"E
379.75'
IPP
IPF (1/2" RB)
EXISTING TREE LINE (TYP.)
EXISTING R/W
PIPE TO BE REMOVED
SSMH TOP=722.23 INV IN=704.78 INV IN=716.18 INV OUT=704.65
EXISTING 8" PVC WATER
SSMH TOP=723.03 INV IN=715.93 INV OUT=715.73
SSMH TOP=724.68 INV IN=705.95 INV OUT=705.91
EXISTING GAS LINE
EXISTING 20' SANITARY SEWER EASEMENT
EX 10" PVC
S01°50'35"E
INTERFRICTION DRIVE
AKA. FRICTION DRIVE
60' RIGHT-OF-WAY
FH
PP
SSMH TOP=723.69 INV IN=706.64 INV OUT=706.52
10.66'
402.98'
EXISTING R/W
EX 15" CMP INV=720.07
EXISTING DOUBLE YELLOW CENTERLINE
EX 15" CMP INV=719.26
EXISTING 8" PVC WATER
60.00'
23.85'
IPP
EXISTING TREE LINE (TYP.)
EXISTING 10" PVC
SSMH TOP=721.36 INV IN=707.69 INV OUT=707.66
EX 15" CMP INV=718.46
EX 15" CMP INV=716.82
TOTAL
3.512 ACRES
ZONED L-I
N01°50'28"W
403.29'
N/F
3S INVESTMENTS, LLC
DB:1887; PG:833
N89°49'46"W
379.75'
N/F
3S INVESTMENTS, LLC
DB:1887; PG:833
BARTOW COUNTY 100 YEAR FLOOD LIMITS
50' CITY UNDISTURBED STREAM BUFFER
25' STATE UNDISTURBED STREAM BUFFER
75' IMPERVIOUS STREAM BUFFER
BARTOW COUNTY 100 YEAR FLOOD LIMITS
730
724
722
720
718
716
714
712
710
708
706
704
702
700
698
696

DEMOLITION NOTES

- CONTRACTOR SHALL PROVIDE FOR LOCATION OF UNDERGROUND UTILITY LINES.
- CONTRACTOR SHALL COORDINATE ALL DEMOLITION AND CONSTRUCTION WITH LOCAL GOVERNING AUTHORITIES
- POWERLINES TO BE REMOVED AND REPLACED WITH UNDERGROUND UTILITIES.
- CAP AND REMOVE ALL EXISTING UTILITY LINES (ELECTRICAL, SANITARY SEWER, STORM SEWER , GAS, ETC.) TO PROPERTY LINE. COORDINATE WITH LOCAL UTILITY COMPANIES.
- CONTRACTOR MAY USE EXISTING ASHALT/GRAVEL AREA FOR STAGING, AND REMOVE AFTER NO LONGER NEEDED.
- NO DEMOLITION IS ALLOWED ON SITE UNTIL INITIAL BMP'S ARE INSTALLED AND APPROVED BY THE CITY OF CARTERSVILLE ENGINEERING DEPARTMENT.

INFORMATION REGARDING THE PRESENCE, SIZE, CHARACTER AND LOCATION OF EXISTING UNDERGROUND UTILITIES AND STRUCTURES SHOWN HEREON IS BASED ON INFORMATION READILY AVAILABLE AT THE TIME OF PREPARATION. THERE IS NO CERTAINTY OF THE ACCURACY OF THIS INFORMATION AND IT SHALL BE TAKEN INTO CONSIDERATION BY THOSE USING THIS DOCUMENT. THE LOCATION AND DISPOSITION OF UTILITIES SHOWN MAY BE INACCURATE AND UTILITIES AND STRUCTURES NOT SHOWN MAY BE ENCOUNTERED. THE CONTRACTOR SHALL BE RESPONSIBLE FOR LOCATING ALL UTILITIES AFFECTED BY HIS WORK PRIOR TO BEGINNING ANY CONSTRUCTION OR LAND DISTURBANCE. THIS DOCUMENT WAS PREPARED FOR THE EXCLUSIVE USE OF THE PERSON, PERSONS OR ENTITY NAMED HEREON. USE OF THIS DOCUMENT DOES NOT EXTEND TO ANY UNNAMED PERSON WITHOUT THE EXPRESS RECERTIFICATION BY THE ENGINEER. THE RECORD DRAWINGS AND DESIGN DOCUMENTS FOR THIS PROJECT ARE ON FILE AT THE OFFICES OF SOUTHLAND ENGINEERING. ANY ALTERATION OR REVISION TO THESE DOCUMENTS BY PERSONS OTHER THAN PROFESSIONAL EMPLOYEES OF SLE SHALL NOT BE PERMITTED. SOUTHLAND ENGINEERING SHALL NOT BE HELD LIABLE FOR ANY CLAIMS MADE ARISING FROM UNAUTHORIZED ALTERATIONS,REVISIONS OR USE.

SURVEY BY:
SOUTHLAND ENGINEERING, INC.
TOPOGRAPHY:
FIELD RUN BY SOUTHLAND ENGINEERING, INC.
AND BY CARTERSVILLE GIS

No. 2980
KEVIN N. COONEY

811
Know what's below.
Call before you dig.

24 HOUR CONTACT
CRAIG MILSAP
770-387-5151

GRAPHIC SCALE
30 0 15 30 60 120
(IN FEET)
1 inch = 30 ft.

PROJECT NO.:
14137

DATE:
04/28/15

REVISIONS:

	DATE	DESCRIPTION
1	3/25/15	CITY SUB
2	4/01/15	OUTLET REV
3	4/27/15	2ND SUB CITY
4		
5		
6		

SOUTHLAND
ENGINEERING
CIVIL ENGINEERS - LAND SURVEYORS - LAND PLANNERS
114 OLD MILL ROAD., CARTERSVILLE, GA 30120
PH: 770.387.0440 FAX: 770.607.5151

BARTOW COUNTY
FIRE STATION #9
LOCATED IN LAND LOTS 856 & 857
4TH DISTRICT, 3RD SECTION
CARTERSVILLE, GEORGIA

KARL P. LUTJENS

SHEET TITLE:
EXISTING CONDITIONS

SHEET NO.:
C101

PLANT LIST

QTY.	COMMON NAME	SIZE	SYMBOL
TREES			
18	RED MAPLE	8 Feet	●
8	CRAPE MYRTLE	8 Feet	✿

LANDSCAPE NOTES
PLANT IN FULL OR PARTIAL SUN, WELL-DRAINED SOIL. PRUNE ANNUALLY.

TREES SHALL BE A MINIMUM HEIGHT OF 8 FEET WHEN PLANTED; SHALL HAVE A HEIGHT AT MATURING OF AT LEAST 15 FEET ; SHALL BE POLLUTION- AND HEAT-TOLERANT; SHALL REQUIRE LITTLE MAINTENANCE, BE MECHANICALLY STRONG, AND DISEASE RESISTANT.

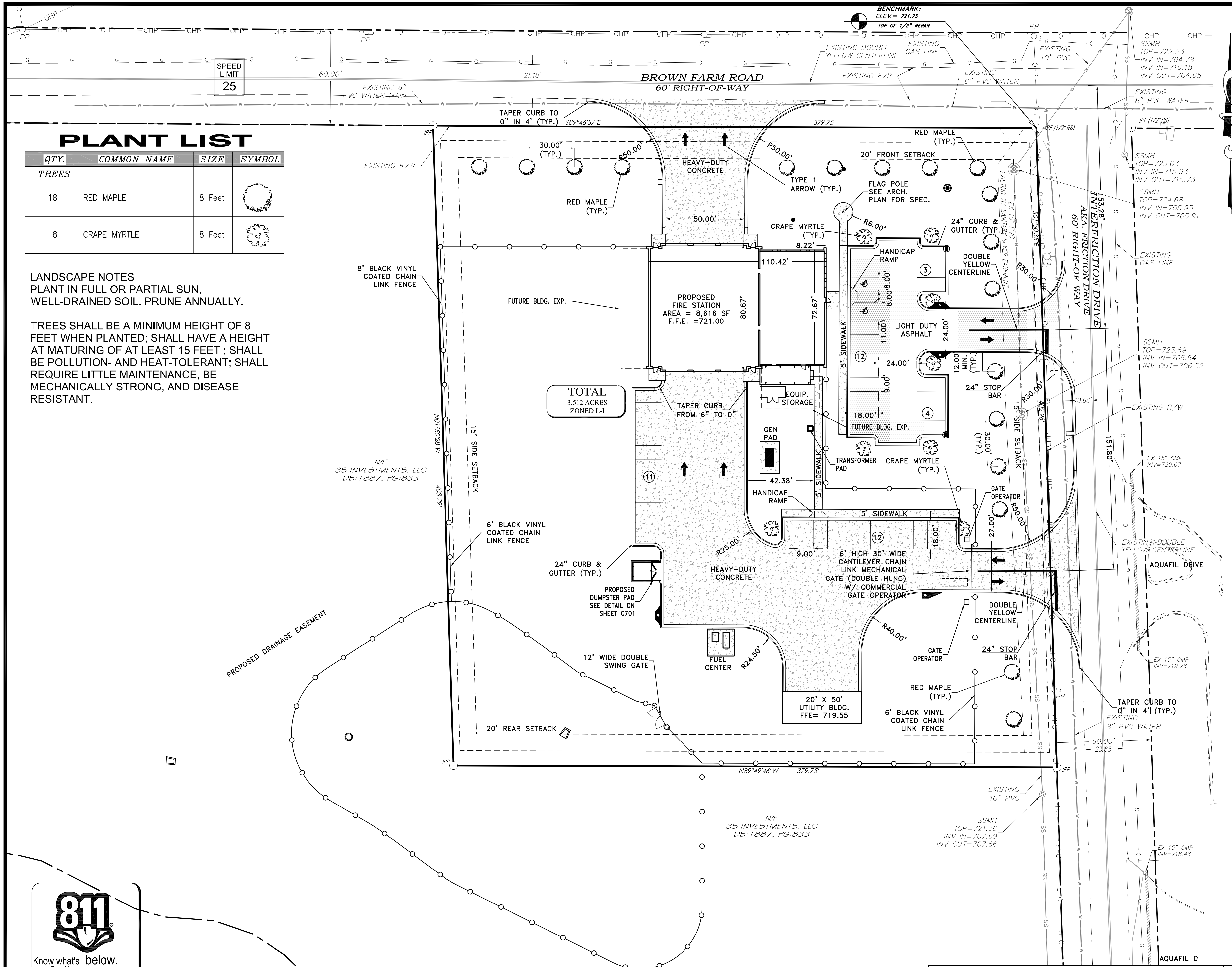
SPEED LIMIT 25
60.00'
21.18'
BROWN FARM ROAD
60' RIGHT-OF-WAY
EXISTING 6" PVC WATER MAIN
BENCHMARK:
ELEV.= 721.73
TOP OF 1/2" REBAR
EXISTING DOUBLE YELLOW CENTERLINE
EXISTING GAS LINE
EXISTING E/P
EXISTING 6" PVC WATER
EXISTING 10" PVC
SSMH TOP=722.23 INV IN=704.78 INV IN=716.18 INV OUT=704.65
EXISTING 8" PVC WATER
IPF (1/2" RB)
TAPER CURB TO 0" IN 4' (TYP.)
S89°46'57"E
379.75'
IPP
EXISTING R/W
30.00' (TYP.)
R50.00'
RED MAPLE (TYP.)
HEAVY-DUTY CONCRETE
TYPE 1 ARROW (TYP.)
20' FRONT SETBACK
FLAG POLE SEE ARCH. PLAN FOR SPEC.
R6.00'
50.00'
CRAPE MYRTLE (TYP.)
24" CURB & GUTTER (TYP.)
8.22'
110.42'
HANDICAP RAMP
DOUBLE YELLOW CENTERLINE
EX 10" PVC
EXISTING 20' SANITARY SEWER EASEMENT
S01°50'35"E
R30.00'
FH
153.28'
INTERFRICTION DRIVE
AKA. FRICTION DRIVE
60' RIGHT-OF-WAY
SSMH TOP=723.03 INV IN=715.93 INV OUT=715.73
SSMH TOP=724.68 INV IN=705.95 INV OUT=705.91
EXISTING GAS LINE
8' BLACK VINYL COATED CHAIN LINK FENCE
FUTURE BLDG. EXP.
PROPOSED FIRE STATION AREA = 8,616 SF F.F.E. =721.00
80.67'
72.67'
8.00'
8.00'
11.00'
LIGHT DUTY ASPHALT
24.00'
5' SIDEWALK
12
24.00'
12.00' MIN. (TYP.)
SSMH TOP=723.69 INV IN=706.64 INV OUT=706.52
24" STOP BAR
R30.00'
TOTAL 3.512 ACRES ZONED L-I
TAPER CURB FROM 6" TO 0"
EQUIP. STORAGE
9.00'
18.00'
FUTURE BLDG. EXP.
4
30.00' (TYP.)
15' SIDE SETBACK
10.66'
EXISTING R/W
151.80'
N01°50'28"W
403.29'
15' SIDE SETBACK
N/F 35 INVESTMENTS, LLC DB:1887; PG:833
GEN PAD
TRANSFORMER PAD
CRAPE MYRTLE (TYP.)
11
42.38'
5' SIDEWALK
EX 15" CMP INV=720.07
GATE OPERATOR
HANDICAP RAMP
5' SIDEWALK
R50.00'
6' BLACK VINYL COATED CHAIN LINK FENCE
12
18.00'
27.00'
EXISTING DOUBLE YELLOW CENTERLINE
R25.00'
9.00'
6' HIGH 30' WIDE CANTILEVER CHAIN LINK MECHANICAL GATE (DOUBLE HUNG) W/ COMMERCIAL GATE OPERATOR
AQUAFIL DRIVE
24" CURB & GUTTER (TYP.)
HEAVY-DUTY CONCRETE
PROPOSED DUMPSTER PAD SEE DETAIL ON SHEET C701
DOUBLE YELLOW CENTERLINE
R40.00'
PROPOSED DRAINAGE EASEMENT
GATE OPERATOR
24" STOP BAR
EX 15" CMP INV=719.26
12' WIDE DOUBLE SWING GATE
FUEL CENTER
R24.50'
RED MAPLE (TYP.)
TAPER CURB TO 0" IN 4' (TYP.)
20' X 50' UTILITY BLDG. FFE= 719.55
6' BLACK VINYL COATED CHAIN LINK FENCE
EXISTING 8" PVC WATER
20' REAR SETBACK
60.00'
23.85'
N89°49'46"W
379.75'
IPP
EXISTING 10" PVC
N/F 35 INVESTMENTS, LLC DB:1887; PG:833
SSMH TOP=721.36 INV IN=707.69 INV OUT=707.66
EX 15" CMP INV=718.46
AQUAFIL D
GRAPHIC SCALE
30 0 15 30 60 120
(IN FEET)
1 inch = 30 ft.

811
Know what's below.
Call before you dig.

SITE PLAN NOTES:

1. ACREAGE OF SITE: 3.512 ACRES
2. PROPERTY ADDRESS: 171 BROWN FARM ROAD, CARTERSVILLE, GA. 30120
3. MINIMUM FRONT YARD: 20 FT
4. MINIMUM SIDE YARD: 15 FT.
5. MINIMUM REAR YARD: 20 FT.
6. MINIMUM LOT AREA: NONE
7. MINIMUM LOT FRONTAGE: 110 FT. ADJOINING A STREET.
8. MINIMUM LOT WIDTH AT THE BUILDING LINE: 100 FT.
9. ALL CONSTRUCTION MUST CONFORM TO THE CITY STANDARDS AND SPECIFICATIONS, WHETHER OR NOT REVIEW COMMENTS WERE MADE. NOTIFY INSPECTOR 24 HOURS PRIOR TO CONSTRUCTION.
10. CURRENT ZONING L-I (LIGHT INDUSTRIAL)
11. SIGNING AND STRIPING TO BE PROVIDED BY THE CONTRACTOR ACCORDING TO THE CITY SPECIFICATIONS.
12. ON-SITE PARKING SHALL BE PROVIDED AND MAINTAINED THROUGHOUT CONSTRUCTION.
13. THERE ARE STATE WATERS WITHIN 200 FEET OF THE SITE.
14. THERE ARE NO WETLANDS ON SITE.
15. DOMESTIC WATER PROVIDED BY BARTOW COUNTY.
16. SANITARY SEWER PROVIDED BY CITY OF CARTERSVILLE.
17. TOPOGRAPHIC INFORMATION TAKEN FROM A FIELD RUN SURVEY BY SOUTHLAND ENGINEERING, INC. AND GIS TOPO.
18. EXISTING UTILITY LOCATIONS ARE SHOWN FOR INFORMATION PURPOSES ONLY.
19. CONTRACTOR IS RESPONSIBLE FOR DETERMINING THE EXACT LOCATIONS OF ALL UTILITIES AND FOR COORDINATING HIS OPERATIONS WITH ALL UTILITIES WHICH CONFLICT WITH HIS WORK.
20. STORM DRAIN LOCATIONS AND INVERTS ARE TO BE FIELD VERIFIED. DISCREPANCIES ARE TO BE ADDRESSED TO THE ENGINEER. STORM DRAIN GRADES ARE TO MATCH EXISTING WATERCOURSE GRADES UNLESS NOTED OTHERWISE.
21. PARKING LOT OUTDOOR LIGHTING SHALL HAVE A MAXIMUM HEIGHT OF 45 FEET AND SHALL BE DIRECTED AWAY AND SHIELDED FROM ABUTTING RESIDENTIAL DISTRICTS AND USE.
22. NOTE: THE SITE IS NOT LOCATED WITHIN THE ETOWAH VALLEY HISTORIC DISTRICT AS DEPICTED ON THE BARTOW COUNTY ETOWAH VALLEY HISTORIC DISTRICT MAP.
23. ACCEPTANCE OF THESE PLANS DOES NOT CONSTITUTE APPROVAL BY THE CITY OF CARTERSVILLE OF ANY LAND DISTURBING ACTIVITIES WITHIN WETLAND AREAS. IT IS THE OWNER'S RESPONSIBILITY TO CONTACT THE APPROPRIATE REGULATORY AGENCY FOR APPROVAL OF ANY WETLAND AREA DISTURBANCE.
24. IT IS THE DEVELOPERS RESPONSIBILITY TO ADDRESS ANY ENDANGERED SPECIES ISSUES TO THE SATISFACTION OF THE U.S. FISH AND WILDLIFE SERVICE.
25. IT IS THE DEVELOPERS RESPONSIBILITY TO ABIDE BY ALL THE RULES AND REGULATIONS PERTAINING TO THE STATE OF GEORGIA NATION POLLUTION DISCHARGE ELIMINATION SYSTEM (NPDES) PERMIT REQUIREMENTS.
26. ASBUILT DRAWINGS FOR STORMWATER MANAGEMENT SYSTEM MUST BE SUBMITTED PRIOR TO CERTIFICATE OF OCCUPANCY.
27. LAND DISTURBING ACTIVITIES UNDER THE PERMIT MUST BEGIN WITHIN 120 DAYS AFTER ISSUANCE OF THE LAND DISTURBANCE PERMIT.
28. ALL ROADWAY AND ROADSIDE DESIGN MUST CONFORM TO AASHTO GUIDELINES.
29. OWNER/DEVELOPER TO CONTACT THE CITY OF CARTERSVILLE ZONING DEPARTMENT PRIOR TO INSTALLATION OF DEVELOPMENT SIGN.
30. TOTAL IMPERVOUS AREA = 47,484 S.F. (31%).

PARKING REQUIREMENTS
1 SPACE FOR EACH 300 SQUARE FEET OF GROSS FLOOR SPACE
GROSS FLOOR SPACE = 8,244 SF REQUIRED PARKING = 28 SPACES PROVIDED PARKING = 42 SPACES (INCLUDING 2 HANDICAPPED SPACES)

24 HOUR CONTACT
CRAIG MILSAP
770-387-5151

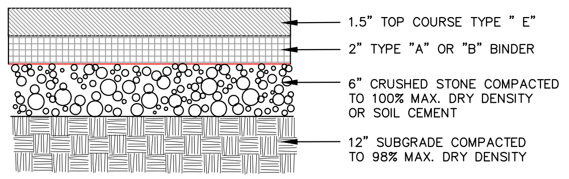
1.5" TOP COURSE TYPE " E"
2" TYPE "A" OR "B" BINDER
6" CRUSHED STONE COMPACTED TO 100% MAX. DRY DENSITY OR SOIL CEMENT
12" SUBGRADE COMPACTED TO 98% MAX. DRY DENSITY

LIGHT DUTY ASPHALT DETAIL
NOT TO SCALE

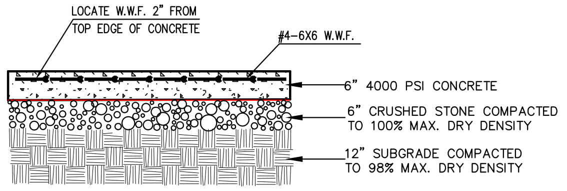
LOCATE W.W.F. 2" FROM TOP EDGE OF CONCRETE
#4-6X6 W.W.F.
6" 4000 PSI CONCRETE
6" CRUSHED STONE COMPACTED TO 100% MAX. DRY DENSITY
12" SUBGRADE COMPACTED TO 98% MAX. DRY DENSITY

HEAVY DUTY CONCRETE DETAIL
NOT TO SCALE

PROJECT NO.: 14137
DATE: 04/28/15

REVISIONS:

	DATE	DESCRIPTION
1	3/25/15	CITY SUB
2	4/01/15	OUTLET REV
3	4/27/15	2ND SUB CITY
4		
5		
6		

SOUTHLAND
ENGINEERING
CIVIL ENGINEERS - LAND SURVEYORS - LAND PLANNERS
114 OLD MILL ROAD., CARTERSVILLE, GA 30120 PH: 770.387.0440 FAX: 770.607.5151

BARTOW COUNTY
FIRE STATION #9
LOCATED IN LAND LOTS 856 & 857
4TH DISTRICT, 3RD SECTION
CARTERSVILLE, GEORGIA

No. 28430
KARL P. LUTJENS

SHEET TITLE:
SITE & LANDSCAPE PLAN

SHEET NO.:
C201

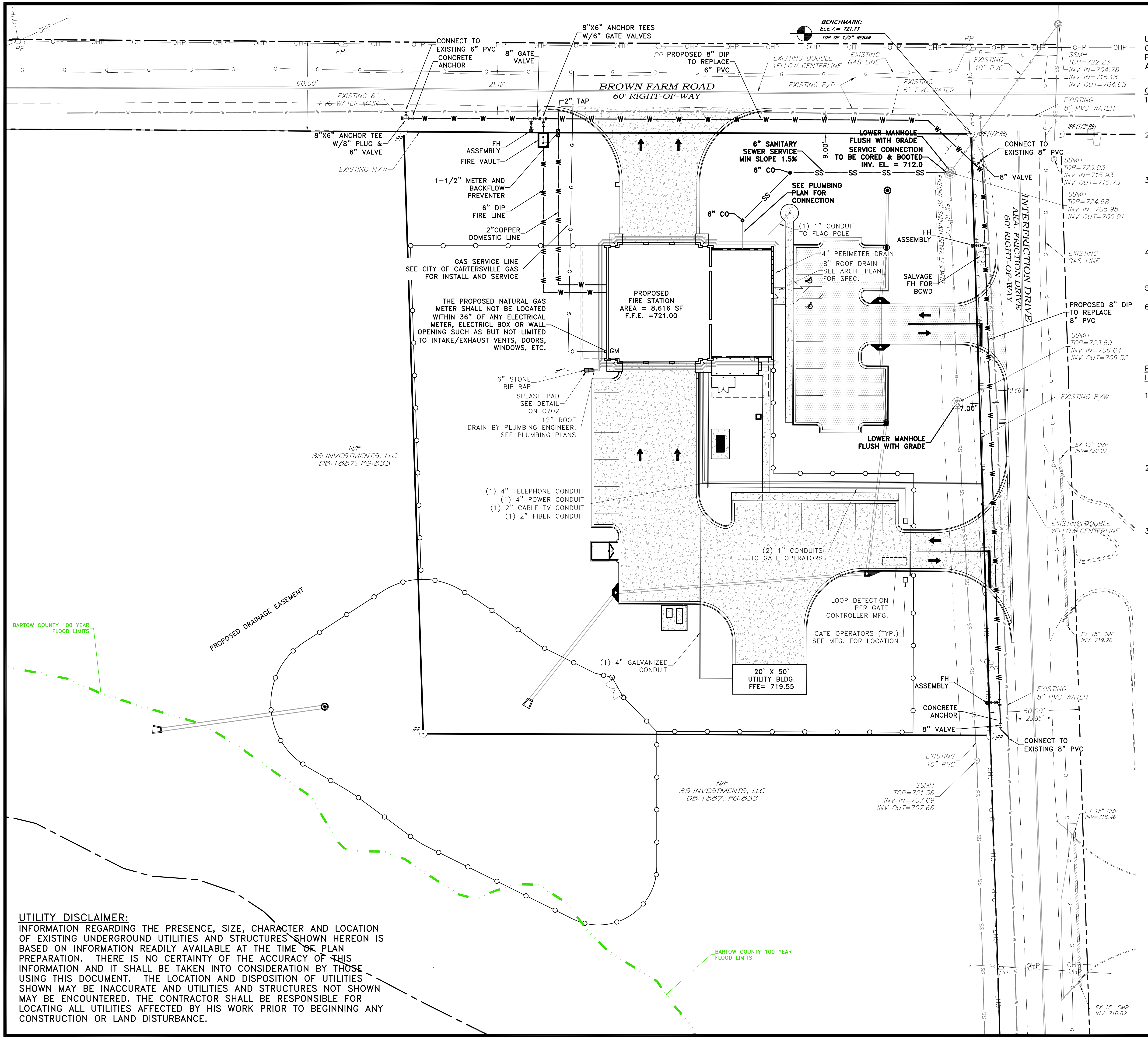
CONNECT TO EXISTING 6" PVC
CONCRETE ANCHOR
8" GATE VALVE
8"X6" ANCHOR TEES W/6" GATE VALVES
BENCHMARK: ELEV.= 721.73 TOP OF 1/2" REBAR
PP PROPOSED 8" DIP TO REPLACE 6" PVC
EXISTING DOUBLE YELLOW CENTERLINE
EXISTING GAS LINE
EXISTING 10" PVC
SSMH TOP=722.23 INV IN=704.78 INV IN=716.18 INV OUT=704.65
60.00'
21.18'
EXISTING 6" PVC WATER MAIN
BROWN FARM ROAD
60' RIGHT-OF-WAY
2" TAP
EXISTING E/P
EXISTING 6" PVC WATER
EXISTING 8" PVC WATER
IPF (1/2" RB)
8"X6" ANCHOR TEE W/8" PLUG & 6" VALVE
EXISTING R/W
FH ASSEMBLY
FIRE VAULT
1-1/2" METER AND BACKFLOW PREVENTER
6" DIP FIRE LINE
2"COPPER DOMESTIC LINE
GAS SERVICE LINE SEE CITY OF CARTERSVILLE GAS FOR INSTALL AND SERVICE
THE PROPOSED NATURAL GAS METER SHALL NOT BE LOCATED WITHIN 36" OF ANY ELECTRICAL METER, ELECTRICL BOX OR WALL OPENING SUCH AS BUT NOT LIMITED TO INTAKE/EXHAUST VENTS, DOORS, WINDOWS, ETC.
GM
LOWER MANHOLE FLUSH WITH GRADE
9.00'
6" SANITARY SEWER SERVICE MIN SLOPE 1.5%
SERVICE CONNECTION TO BE CORED & BOOTED INV. EL. = 712.0
6" CO
SEE PLUMBING PLAN FOR CONNECTION
CONNECT TO EXISTING 8" PVC
8" VALVE
SSMH TOP=723.03 INV IN=715.93 INV OUT=715.73
SSMH TOP=724.68 INV IN=705.95 INV OUT=705.91
(1) 1" CONDUIT TO FLAG POLE
PROPOSED FIRE STATION AREA = 8,616 SF F.F.E. =721.00
4" PERIMETER DRAIN
8" ROOF DRAIN SEE ARCH. PLAN FOR SPEC.
EXISTING 20' SANITARY SEWER EASEMENT
EX 10" PVC
FH ASSEMBLY
SALVAGE FH FOR BCWD
INTERFRICTION DRIVE AKA. FRICTION DRIVE 60' RIGHT-OF-WAY
EXISTING GAS LINE
PROPOSED 8" DIP TO REPLACE 8" PVC
SSMH TOP=723.69 INV IN=706.64 INV OUT=706.52
6" STONE RIP RAP
SPLASH PAD SEE DETAIL ON C702
12" ROOF DRAIN BY PLUMBING ENGINEER. SEE PLUMBING PLANS
10.66'
7.00'
EXISTING R/W
LOWER MANHOLE FLUSH WITH GRADE
EX 15" CMP INV=720.07
N/F 3S INVESTMENTS, LLC DB:1887; PG:833
(1) 4" TELEPHONE CONDUIT
(1) 4" POWER CONDUIT
(1) 2" CABLE TV CONDUIT
(1) 2" FIBER CONDUIT
EXISTING DOUBLE YELLOW CENTERLINE
(2) 1" CONDUITS TO GATE OPERATORS
LOOP DETECTION PER GATE CONTROLLER MFG.
GATE OPERATORS (TYP.) SEE MFG. FOR LOCATION
EX 15" CMP INV=719.26
BARTOW COUNTY 100 YEAR FLOOD LIMITS
PROPOSED DRAINAGE EASEMENT
(1) 4" GALVANIZED CONDUIT
20' X 50' UTILITY BLDG. FFE= 719.55
FH ASSEMBLY
EXISTING 8" PVC WATER
CONCRETE ANCHOR
60.00'
23.85'
8" VALVE
IPP
CONNECT TO EXISTING 8" PVC
EXISTING 10" PVC
SSMH TOP=721.36 INV IN=707.69 INV OUT=707.66
N/F 3S INVESTMENTS, LLC DB:1887; PG:833
EX 15" CMP INV=718.46
BARTOW COUNTY 100 YEAR FLOOD LIMITS
EX 15" CMP INV=716.82

UTILITY DISCLAIMER:

INFORMATION REGARDING THE PRESENCE, SIZE, CHARACTER AND LOCATION OF EXISTING UNDERGROUND UTILITIES AND STRUCTURES SHOWN HEREON IS BASED ON INFORMATION READILY AVAILABLE AT THE TIME OF PLAN PREPARATION. THERE IS NO CERTAINTY OF THE ACCURACY OF THIS INFORMATION AND IT SHALL BE TAKEN INTO CONSIDERATION BY THOSE USING THIS DOCUMENT. THE LOCATION AND DISPOSITION OF UTILITIES SHOWN MAY BE INACCURATE AND UTILITIES AND STRUCTURES NOT SHOWN MAY BE ENCOUNTERED. THE CONTRACTOR SHALL BE RESPONSIBLE FOR LOCATING ALL UTILITIES AFFECTED BY HIS WORK PRIOR TO BEGINNING ANY CONSTRUCTION OR LAND DISTURBANCE.

UTILITY NOTES:

CONTRACTOR TO FIELD VERIFY EXISTING UTILITY LOCATIONS PRIOR TO CONSTRUCTION AND SHALL INFORM THE ENGINEER OF ANY AND ALL DISCREPANCIES.

GAS NOTES

1. CONSTRUCTION STAKING FOR THE PROPOSED NATURAL GAS FACILITIES WILL BE PROVIDED BY AND AT THE EXPENSE OF THE DEVELOPER.
2. ALL EARTHWORK AND CLEARING AND GRUBBING IN THE AREAS OF THE PROPOSED NATURAL GAS FACILITIES SHALL BE COMPLETED PRIOR TO THE INSTALLATION OF THE PROPOSED NATURAL GAS FACILITIES.
3. NO PAVEMENT SHALL BE PLACED IN THE AREAS OF THE PROPOSED NATURAL GAS FACILITIES PRIOR TO INSTALLATION OF THE PROPOSED FACILITIES. ANY PAVEMENT PLACED IN THE AREAS OF THE PROPOSED NATURAL GAS FACILITIES PRIOR TO THE INSTALLATION OF THE NATURAL GAS FACILITIES SHALL BE REMOVED AND REPLACED BUY AND AT THE EXPENSE OF THE DEVELOPER.
4. COORDINATE THE INSTALLATION AND COSTS OF THE PROPOSED NATURAL GAS FACILITIES WITH MICHAEL DICKSON OF THE GAS SYSTEM AT 770-387-5642.
5. GAS SERVICE: TBD
6. GAS METERS SHALL NOT BE WITHIN 36" OF ANY WALL OPENING (WINDOWS, VENTS, DOORS, ELECTRICAL BOXES ETC.)

EROSION & SEDIMENT CONTROL-NATURAL GAS FACILITY INSTALLATIONS

1. THE CITY OF CARTERSVILLE GAS SYSTEM WILL OR CAUSE TO PROVIDE AND APPLY STRAW OR HAY MULCH TO A DEPTH OF 6" OVER ALL AREAS DISTURBED SPECIFICALLY BY THE CONSTRUCTION OF THE NATURAL GAS FACILITIES WITHIN THE DEVELOPMENT PROVIDED NO FURTHER DISTURBANCE OF SUCH AREAS ARE PLANNED WITHIN 14 DAYS OF INITIAL DISTURBANCE.
2. THE DEVELOPER WILL OR CAUSE TO MAINTAIN OR RE-APPLY SUCH EROSION AND SEDIMENT CONTROL MEASURES AS NECESSARY OR REQUIRED TO COMPLY WITH ALL LOCAL, STATE AND FEDERAL EROSION AND SEDIMENT CONTROL REQUIREMENTS AFTER INITIAL APPLICATION AS REQUIRED BY #1 ABOVE.
3. THE DEVELOPER WILL OR CAUSE TO PROVIDE, INSTALL, MAINTAIN AND REMOVE ANY AND ALL EROSION AND SEDIMENT CONTROL MEASURES NECESSARY OR REQUIRED TO COMPLY WITH ALL LOCAL, STATE AND FEDERAL EROSION AND SEDIMENT CONTROL REQUIREMENTS WHICH MAY BE ASSOCIATED WITH THE CONSTRUCTION OF THE NATURAL GAS FACILITIES WITHIN THE DEVELOPMENT OTHER THAN #1 ABOVE.

24 HOUR CONTACT
CRAIG MILSAP
770-387-5151

811
Know what's below.
Call before you dig.

GRAPHIC SCALE
30 0 15 30 60 120
(IN FEET)
1 inch = 30 ft.

PROJECT NO.:
14137

DATE:
04/28/15

REVISIONS:

	DATE	DESCRIPTION
1	3/25/15	CITY SUB
2	4/01/15	OUTLET REV
3	4/27/15	2ND SUB CITY
4		
5		
6		

SOUTHLAND
ENGINEERING
CIVIL ENGINEERS - LAND SURVEYORS - LAND PLANNERS
114 OLD MILL ROAD., CARTERSVILLE, GA 30120 PH: 770.387.0440 FAX: 770.607.5151

BARTOW COUNTY
FIRE STATION #9
LOCATED IN LAND LOTS 856 & 857
4TH DISTRICT, 3RD SECTION
CARTERSVILLE, GEORGIA

No. 28307
KARL P. LUTJENS

SHEET TITLE:
UTILITY PLAN

SHEET NO.:
C301

24 HOUR CONTACT
CRAIG MILSAP
770-387-5151

811
Know what's below.
Call before you dig.

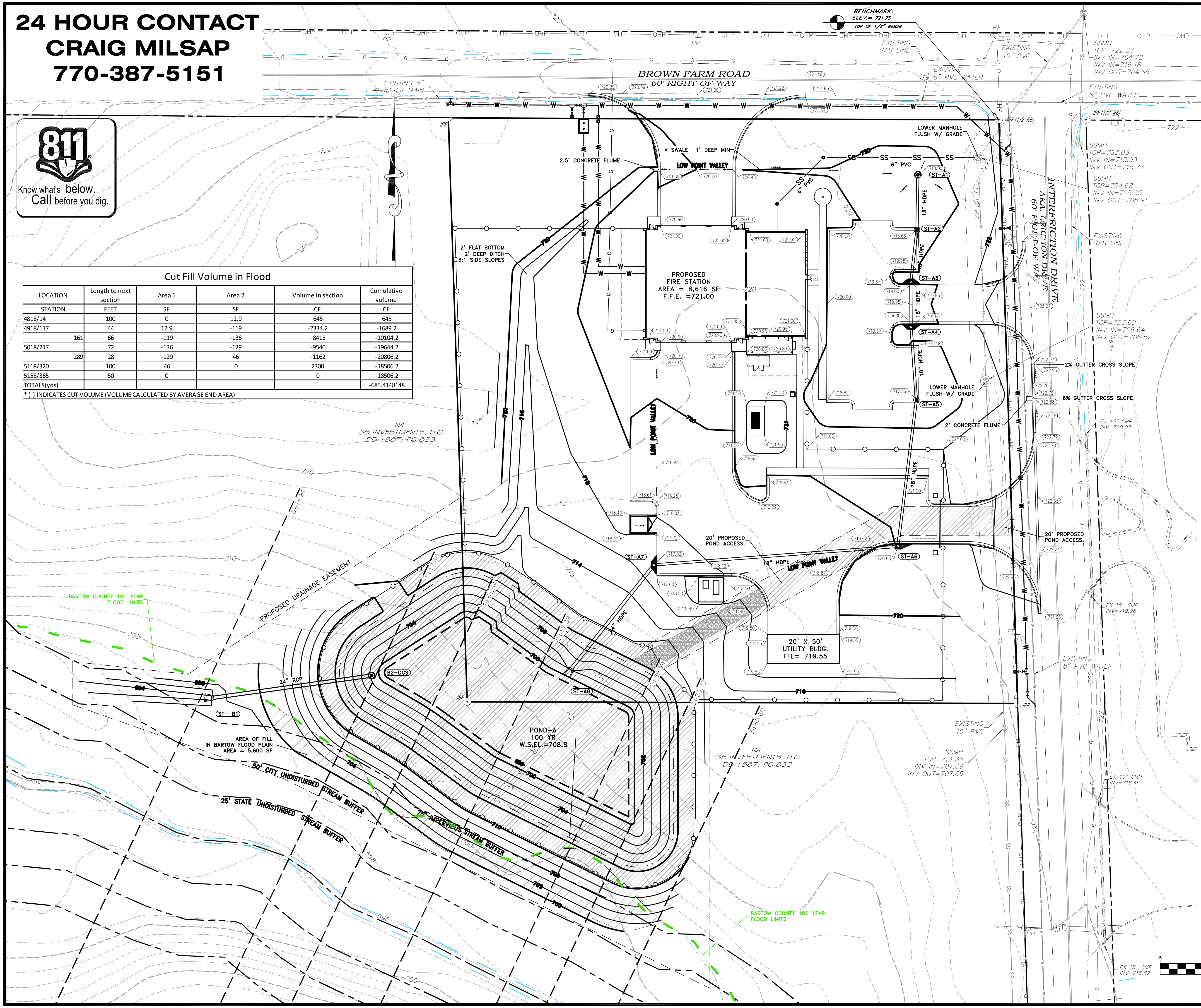
BENCHMARK:
ELEV.= 721.73
TOP OF 1/2" REBAR
BROWN FARM ROAD
60' RIGHT-OF-WAY
EXISTING 6" PVC WATER MAIN
EXISTING GAS LINE
EXISTING 10" PVC
EXISTING 6" PVC WATER
EXISTING 8" PVC WATER
SSMH TOP=722.23 INV IN=704.78 INV IN=716.18 INV OUT=704.65
SSMH TOP=723.03 INV IN=715.93 INV OUT=715.73
SSMH TOP=724.68 INV IN=705.95 INV OUT=705.91
SSMH TOP=723.69 INV IN=706.64 INV OUT=706.52
SSMH TOP=721.36 INV IN=707.69 INV OUT=707.66
IPF (1/2" RB)
INTERRICTION DRIVE
AKA. FRICTION DRIVE
60' RIGHT-OF-WAY
LOWER MANHOLE FLUSH W/ GRADE
V SWALE– 1' DEEP MIN
2.5' CONCRETE FLUME
LOW POINT VALLEY
6" PVC
SS
ST–A1
ST–A2
ST–A3
ST–A4
ST–A5
ST–A6
ST–A7
ST–A8
ST– B1
B2–OCS
18" HDPE
24" RCP
2' FLAT BOTTOM
2' DEEP DITCH
3:1 SIDE SLOPES
PROPOSED FIRE STATION
AREA = 8,616 SF
F.F.E. =721.00
2% GUTTER CROSS SLOPE
6% GUTTER CROSS SLOPE
2' CONCRETE FLUME
20' PROPOSED POND ACCESS.
20' X 50' UTILITY BLDG.
FFE= 719.55
EXISTING GAS LINE
EX 15" CMP INV=720.07
EX 15" CMP INV=719.26
EX 15" CMP INV=718.46
EX 15" CMP INV=716.82
N/F
3S INVESTMENTS, LLC
DB:1887; PG:833
PROPOSED DRAINAGE EASEMENT
BARTOW COUNTY 100 YEAR FLOOD LIMITS
AREA OF FILL IN BARTOW FLOOD PLAIN AREA = 5,600 SF
50' CITY UNDISTURBED STREAM BUFFER
25' STATE UNDISTURBED STREAM BUFFER
75' IMPERVIOUS STREAM BUFFER
POND–A
100 YR
W.S.EL.=708.8
IPP
GRAPHIC SCALE
30 0 15 30 60 120
(IN FEET)
1 inch = 30 ft.

Cut Fill Volume in Flood

LOCATION	Length to next section	Area 1	Area 2	Volume In section	Cumulative volume
STATION	FEET	SF	SF	CF	CF
4818/14	100	0	12.9	645	645
4918/117	44	12.9	-119	-2334.2	-1689.2
161	66	-119	-136	-8415	-10104.2
5018/217	72	-136	-129	-9540	-19644.2
289	28	-129	46	-1162	-20806.2
5118/320	100	46	0	2300	-18506.2
5158/365	50	0		0	-18506.2
TOTALS(yds)					-685.4148148

* (-) INDICATES CUT VOLUME (VOLUME CALCULATED BY AVERAGE END AREA)

GRADING NOTES

1. UNDERCUTTING IS REQUIRED IN ALL AREAS WHERE MATERIAL IS DETERMINED TO BE UNSUITABLE (BY A REGISTERED GEOTECHNICAL ENGINEER) FOR STRUCTURAL BACKFILL MATERIAL.
2. ALL TREES, STUMPS, ROOTS, DEBRIS, AND OTHERWISE DELETERIOUS MATERIAL MAY NOT BE BURIED OR DISPOSED OF ON SITE WITHOUT PRIOR APPROVAL OF THE ENGINEER.
3. ALL SLOPES SHALL BE 2:1 MAXIMUM, UNLESS SPECIFIED OTHERWISE OR WITH WRITTEN APPROVAL FROM THE ENGINEER.
4. STRIP TOPSOIL AND VEGETATION FROM ALL WORK AREAS PRIOR TO GRADING.
5. COMPACT FILL TO 95% STD PROCTOR DENSITY. COMPACT TOP 12" IN BLDG AREAS TO 100% SPD FOR AN AREA EXTENDING 10' BEYOND SLAB IN ALL DIRECTIONS.
6. STOCKPILES TO BE COMPACTED TO 90% SPD IN TOP 2' TO PREVENT INFILTRATION OF MOISTURE.
7. WATERTIGHT BELL AND SPIGOTED GASKET JOINTS MUST BE PROVIDED FOR HDPE.
8. INFORMATION REGARDING THE PRESENCE, SIZE, CHARACTER AND LOCATION OF EXISTING UNDERGROUND UTILITIES AND STRUCTURES SHOWN HEREON IS BASED ON INFORMATION READILY AVAILABLE AT THE TIME OF PREPARATION. THERE IS NO CERTAINTY OF THE ACCURACY OF THIS INFORMATION AND IT SHALL BE TAKEN INTO CONSIDERATION BY THOSE USING THIS DOCUMENT. THE LOCATION AND DISPOSITION OF UTILITIES SHOWN MAY BE INACCURATE AND UTILITIES AND STRUCTURES NOT SHOWN MAY BE ENCOUNTERED. THE CONTRACTOR SHALL BE RESPONSIBLE FOR LOCATING ALL UTILITIES AFFECTED BY HIS WORK PRIOR TO BEGINNING ANY CONSTRUCTION OR LAND DISTURBANCE. THIS DOCUMENT WAS PREPARED FOR THE EXCLUSIVE USE OF THE PERSON, PERSONS OR ENTITY NAMED HEREON. USE OF THIS DOCUMENT DOES NOT EXTEND TO ANY UNNAMED PERSON WITHOUT THE EXPRESS RECERTIFICATION BY THE ENGINEER. THE RECORD DRAWINGS AND DESIGN DOCUMENTS FOR THIS PROJECT ARE ON FILE AT THE OFFICES OF SOUTHLAND ENGINEERING, INC (SEI). ANY ALTERATION OR REVISION TO THESE DOCUMENTS BY PERSONS OTHER THAN PROFESSIONAL EMPLOYEES OF SEI SHALL NOT BE PERMITTED. SEI SHALL NOT BE HELD LIABLE FOR ANY CLAIMS MADE ARISING FROM UNAUTHORIZED ALTERATIONS, REVISIONS OR USE.
9. H.D.P.E. PIPE SECTIONS MAY BE INSTALLED BY VARIOUS METHODS SUCH AS SNAP-ON, SCREW-ON, BELL & SPIGOT, AND WRAP-AROUND. COUPLINGS SHALL PROVIDE SUFFICIENT LOGITUDINAL STRENGTH TO PRESERVE PIPE ALIGNMENT AND PREVENT SEPARATION AT THE JOINTS. ONLY FITTINGS SUPPLIED OR RECOMMENDED BY THE PIPE MANUFACTURER SHALL BE USED. A NEOPRENE OR RUBBER GASKET SHALL BE SUPPLIED. JOINTS SHALL BE INSTALLED IN ACCORDANCE WITH THE MANUFACTURER'S RECOMMENDATIONS.
10. ALL FUTURE DEVELOPMENT STORMWATER MUST BE DIRECTED TO THE DETENTION POND AS INDICATED IN THE APPROVED HYDROLOGY STUDY.
11.FUTURE DEVELOPMENT OF ADJOINING 3S PROPERTIES MUST MEET ASSUMED CONDITIONS IN THE APPROVED HYDROLOGY STUDY FOR BARTOW FIRE STATION #9.

PROJECT NO.:
14137

DATE:
04/28/15

REVISIONS:

	DATE	DESCRIPTION
1	3/25/15	CITY SUB
2	4/01/15	OUTLET REV
3	4/27/15	2ND SUB CITY
4		
5		
6		

SOUTHLAND ENGINEERING
CIVIL ENGINEERS - LAND SURVEYORS - LAND PLANNERS
114 OLD MILL ROAD., CARTERSVILLE, GA 30120
PH: 770.387.0440 FAX: 770.607.5151

BARTOW COUNTY
FIRE STATION #9
LOCATED IN LAND LOTS 856 & 857
4TH DISTRICT, 3RD SECTION
CARTERSVILLE, GEORGIA

KARL P. LUTJENS

SHEET TITLE:
GRADING PLAN

SHEET NO.:
C401

NOTES:

1. DAM EMBANKMENTS SHALL BE CONSTRUCTED PER GEOTECHNICAL ENGINEER'S RECOMMENDATIONS. EMBANKMENTS, AT A MINIMUM, SHALL BE CONSTRUCTED IN SIX INCH (6") MAXIMUM LIFTS AND COMPACTED TO 95% MAXIMUM DRY DENSITY PER AASHTO T-99.
2. IMPERVIOUS CORE SHALL BE PROVIDED IN DAM. CORE SHALL BE CONSTRUCTED FROM CLAY OR OTHER IMPERVIOUS MATERIALS.
3. EMERGENCY SPILLWAY SHALL BE CONSTRUCTED OF STABLE, NON-ERODIBLE MATERIAL.
4. PROVIDE ANTI-SEEP COLLARS.

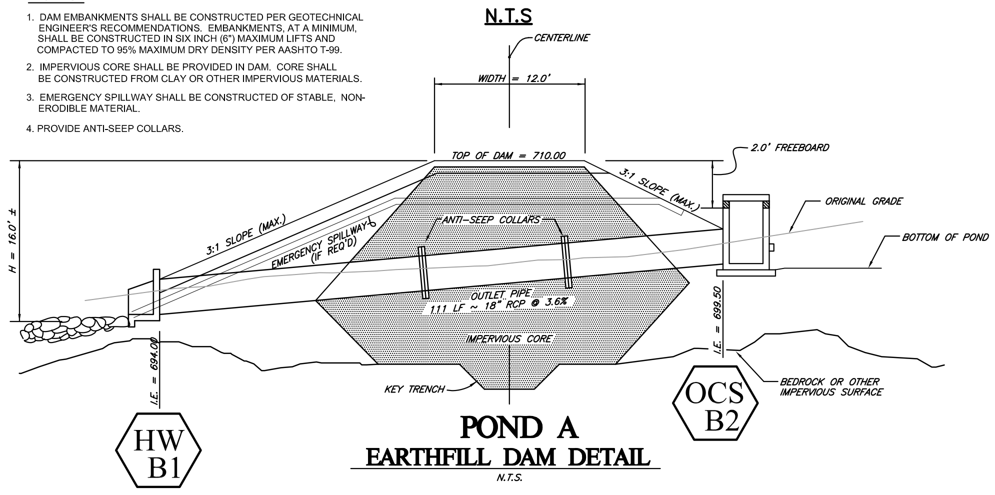
N.T.S
CENTERLINE
WIDTH = 12.0'
TOP OF DAM = 710.00
2.0' FREEBOARD
3:1 SLOPE (MAX.)
ORIGINAL GRADE
BOTTOM OF POND = 700.00
H = 16.0' ±
3:1 SLOPE (MAX.)
EMERGENCY SPILLWAY (IF REQ'D)
ANTI-SEEP COLLARS
OUTLET PIPE
111 LF ~ 18" RCP @ 3.6%
IMPERVIOUS CORE
I.E. = 699.50
I.E. = 694.00
KEY TRENCH
BEDROCK OR OTHER IMPERVIOUS SURFACE
HW B1
OCS B2

POND A
EARTHFILL DAM DETAIL

N.T.S.

STORMWATER POND MANAGEMENT INSPECTION AND MAINTENANCE SCHEDULE
OWNER IS RESPONSIBLE FOR ALL INSTALLATION AND MAINTENANCE.

ACTIVITY	SCHEDULE
• CLEAN AND REMOVE DEBRIS FORM INLET AND OUTLET STRUCTURES. • MOW SIDE SLOPES	MONTHLY
• IF WETLAND COMPONENTS ARE INCLUDED, INSPECT FOR INVASIVE VEGETATION. • CHECK FOR SIGNS OF EUTROPHIC CONDITIONS. • NOTE SIGNS OF HYDROCARBON BUILD-UP, AND REMOVE APPROPRIATELY. • MONITOR FOR SEDIMENT ACCUMULATION IN THE FACILITY AND FOREBAY. • EXAMINE TO ENSURE THAT INLET AND OUTLET DEVICES ARE FREE OF DEBRIS AND OPERATIONAL. • CHECK ALL CONTROL GATES, VALVES OR OTHER MECHANICAL DEVICES.	ANNUAL INSPECTION
• REPAIR UNDERCUT OR ERODED AREAS.	AS NEEDED
• PERFORM WETLAND PLANT MANAGEMENT AND HARVESTING.	ANNUALLY (IF NEEDED)
• MONITOR SEDIMENT ACCUMULATIONS, AND REMOVE SEDIMENT WHEN THE POOL VOLUME HAS BECOME REDUCED SIGNIFICANTLY, OR THE POND BECOMES EUTROPHIC.	10 TO 20 YEARS OR AFTER 25% OF THE PERMANENT POOL VOLUME HAS BEEN LOST

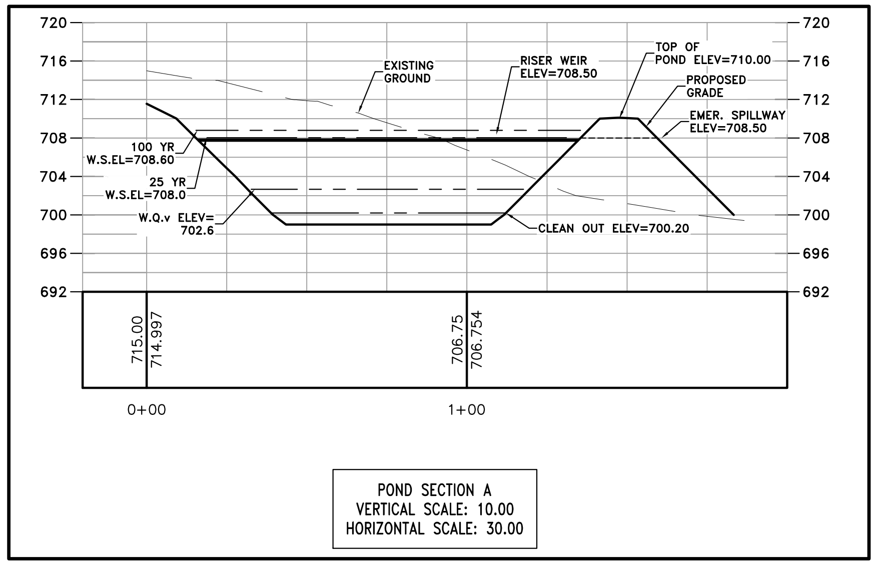
720
716
712
708
704
700
696
692
EXISTING GROUND
RISER WEIR ELEV=708.50
TOP OF POND ELEV=710.00
PROPOSED GRADE
EMER. SPILLWAY ELEV=708.50
100 YR W.S.EL=708.60
25 YR W.S.EL=708.0
W.Q.v ELEV= 702.6
CLEAN OUT ELEV=700.20
715.00
714.997
706.75
706.754
0+00
1+00

POND SECTION A
VERTICAL SCALE: 10.00
HORIZONTAL SCALE: 30.00

INSPECTION/MAINTENANCE/COVENANT NOTE

FOR ALL STORM WATER MANAGEMENT FACILITY OR PRACTICE REMAINING PRIVATELY OWNED, THE APPLICANT MUST EXECUTE MAINTENANCE ACCESS EASEMENT AND AN INSPECTION AND MAINTENANCE AGREEMENT AND COVENANT BINDING ON ALL SUBSEQUENT OWNERS OF LAND SERVED BY AN ON-SITE STORM WATER MANAGEMENT FACILITY OR PRACTICE.

DETENTION FENCE NOTE

A FOUR FOOT (4') HIGH SECURITY FENCE WITH A TWELVE FOOT (12') ACCESS GATE AROUND THE PERIMETER OF ANY POND OVER 4' IN HEIGHT IS REQUIRED. OWNER/DEVELOPER TO POST "KEEP OUT" AND OTHER WARNING SIGNS IF NECESSARY.

RETROFIT NOTE:
SEE RETROFIT CALCULATIONS ON SHEET C-506.

811
Know what's below.
Call before you dig.

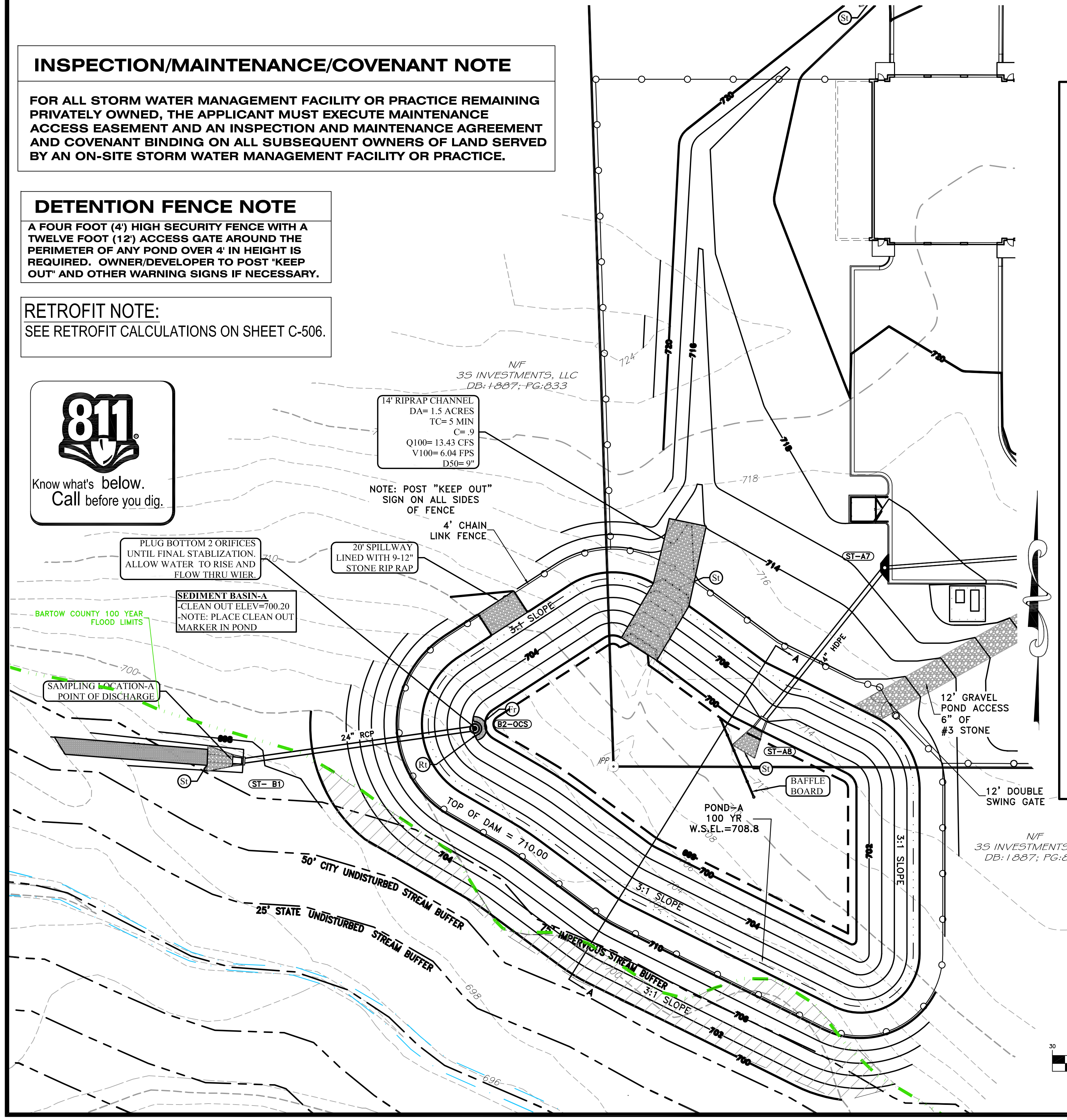
N/F
3S INVESTMENTS, LLC
DB:1887; PG:833
14' RIPRAP CHANNEL
DA= 1.5 ACRES
TC= 5 MIN
C= .9
Q100= 13.43 CFS
V100= 6.04 FPS
D50= 9"
NOTE: POST "KEEP OUT" SIGN ON ALL SIDES OF FENCE
4' CHAIN LINK FENCE
PLUG BOTTOM 2 ORIFICES UNTIL FINAL STABLIZATION. ALLOW WATER TO RISE AND FLOW THRU WIER.
20' SPILLWAY LINED WITH 9-12" STONE RIP RAP
SEDIMENT BASIN-A
-CLEAN OUT ELEV=700.20
-NOTE: PLACE CLEAN OUT MARKER IN POND
BARTOW COUNTY 100 YEAR FLOOD LIMITS
SAMPLING LOCATION-A POINT OF DISCHARGE
24" RCP
St
ST- B1
Rt
Fr
B2-OCS
3:1 SLOPE
ST-A7
ST-A8
4" HDPE
A
12' GRAVEL POND ACCESS 6" OF #3 STONE
12' DOUBLE SWING GATE
BAFFLE BOARD
IPP
POND-A 100 YR W.S.EL.=708.8
TOP OF DAM = 710.00
3:1 SLOPE
50' CITY UNDISTURBED STREAM BUFFER
25' STATE UNDISTURBED STREAM BUFFER
75' IMPERVIOUS STREAM BUFFER
N/F
3S INVESTMENTS, LLC
DB:1887; PG:833
700
702
704
706
708
710
714
716
718
720
724
696
698

GRAPHIC SCALE
30 0 15 30 60 120
(IN FEET)
1 inch = 30 ft.

24 HOUR CONTACT
CRAIG MILSAP
770-387-5151

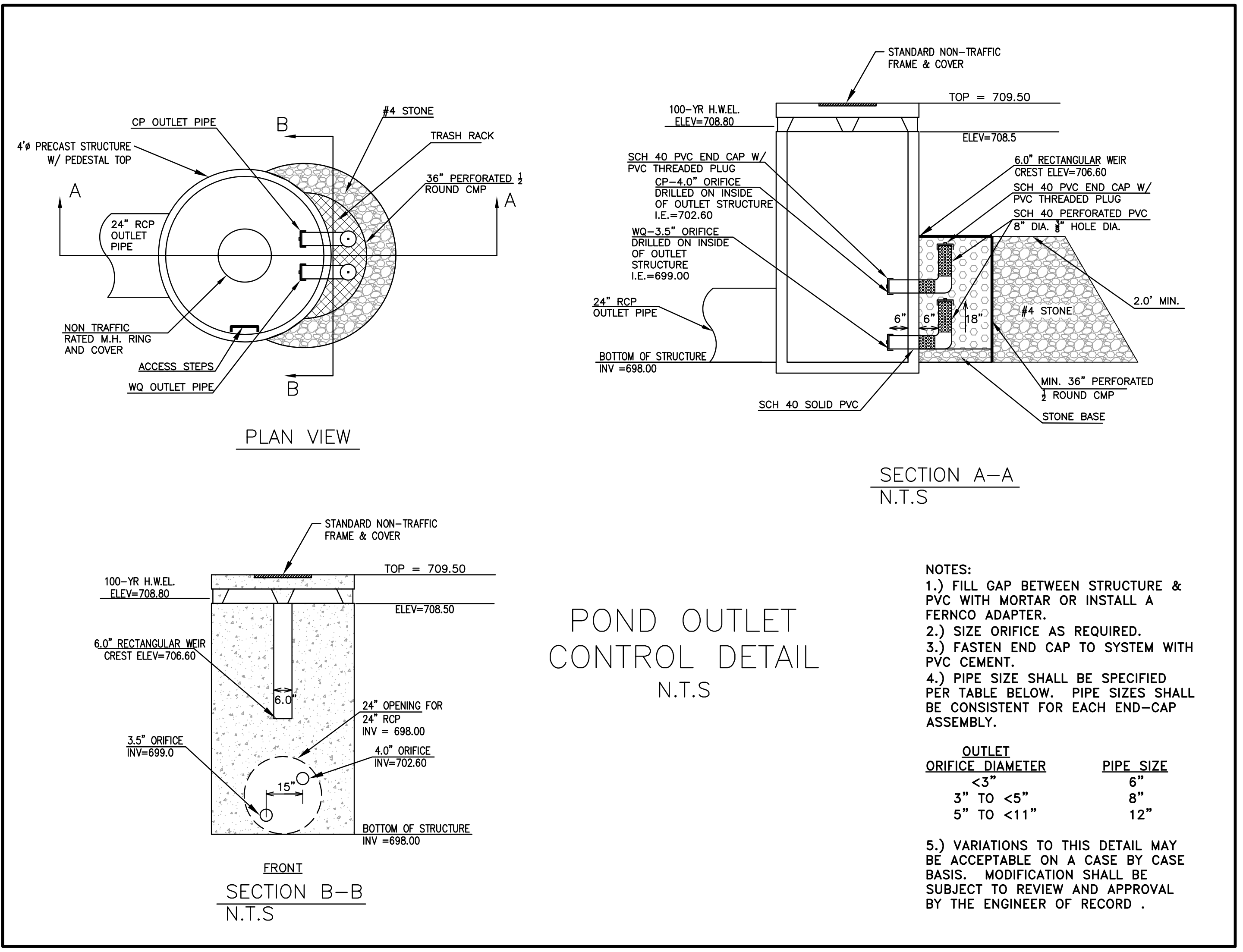
CP OUTLET PIPE
B
#4 STONE
TRASH RACK
4'ø PRECAST STRUCTURE W/ PEDESTAL TOP
36" PERFORATED ½ ROUND CMP
A
24" RCP OUTLET PIPE
NON TRAFFIC RATED M.H. RING AND COVER
ACCESS STEPS
WQ OUTLET PIPE
PLAN VIEW
STANDARD NON-TRAFFIC FRAME & COVER
100-YR H.W.EL. ELEV=708.80
TOP = 709.50
ELEV=708.5
SCH 40 PVC END CAP W/ PVC THREADED PLUG
CP-4.0" ORIFICE DRILLED ON INSIDE OF OUTLET STRUCTURE I.E.=702.60
WQ-3.5" ORIFICE DRILLED ON INSIDE OF OUTLET STRUCTURE I.E.=699.00
24" RCP OUTLET PIPE
BOTTOM OF STRUCTURE INV =698.00
6.0" RECTANGULAR WEIR CREST ELEV=706.60
SCH 40 PVC END CAP W/ PVC THREADED PLUG
SCH 40 PERFORATED PVC 8" DIA. ⅜" HOLE DIA.
2.0' MIN.
6"
6"
18"
#4 STONE
MIN. 36" PERFORATED ½ ROUND CMP
STONE BASE
SCH 40 SOLID PVC
SECTION A-A
N.T.S
STANDARD NON-TRAFFIC FRAME & COVER
TOP = 709.50
100-YR H.W.EL. ELEV=708.80
ELEV=708.50
6.0" RECTANGULAR WEIR CREST ELEV=706.60
6.0"
24" OPENING FOR 24" RCP INV = 698.00
3.5" ORIFICE INV=699.0
4.0" ORIFICE INV=702.60
15"
BOTTOM OF STRUCTURE INV =698.00
FRONT
SECTION B-B
N.T.S

POND OUTLET CONTROL DETAIL
N.T.S

NOTES:

1.) FILL GAP BETWEEN STRUCTURE & PVC WITH MORTAR OR INSTALL A FERNCO ADAPTER.
2.) SIZE ORIFICE AS REQUIRED.
3.) FASTEN END CAP TO SYSTEM WITH PVC CEMENT.
4.) PIPE SIZE SHALL BE SPECIFIED PER TABLE BELOW. PIPE SIZES SHALL BE CONSISTENT FOR EACH END-CAP ASSEMBLY.

OUTLET ORIFICE DIAMETER	PIPE SIZE
<3"	6"
3" TO <5"	8"
5" TO <11"	12"

5.) VARIATIONS TO THIS DETAIL MAY BE ACCEPTABLE ON A CASE BY CASE BASIS. MODIFICATION SHALL BE SUBJECT TO REVIEW AND APPROVAL BY THE ENGINEER OF RECORD .

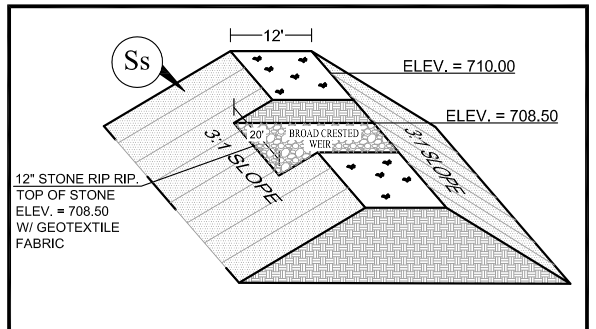
Ss
12'
ELEV. = 710.00
ELEV. = 708.50
20'
BROAD CRESTED WEIR
3:1 SLOPE
3:1 SLOPE
12" STONE RIP RIP.
TOP OF STONE
ELEV. = 708.50
W/ GEOTEXTILE
FABRIC

POND-A EMERGENCY OVERFLOW DETAIL

PROJECT NO.: 14137

DATE: 04/28/15

REVISIONS:

	DATE	DESCRIPTION
1	3/25/15	CITY SUB
2	4/01/15	OUTLET REV
3	4/27/15	2ND SUB CITY
4		
5		
6		

SOUTHLAND
ENGINEERING
CIVIL ENGINEERS - LAND SURVEYORS - LAND PLANNERS
114 OLD MILL ROAD., CARTERSVILLE, GA 30120
PH: 770.387.0440 FAX: 770.607.5151

BARTOW COUNTY
FIRE STATION #9
LOCATED IN LAND LOTS 856 & 857
4TH DISTRICT, 3RD SECTION
CARTERSVILLE, GEORGIA

KARL P. LUTJENS

SHEET TITLE:
POND PLAN

SHEET NO.:
C402

24 HOUR CONTACT
CRAIG MILSAP
770-387-5151

GSWCC LEVEL II CERTIFICATION NUMBER

GEORGIA REGISTRATION NO. GA #3422 ②

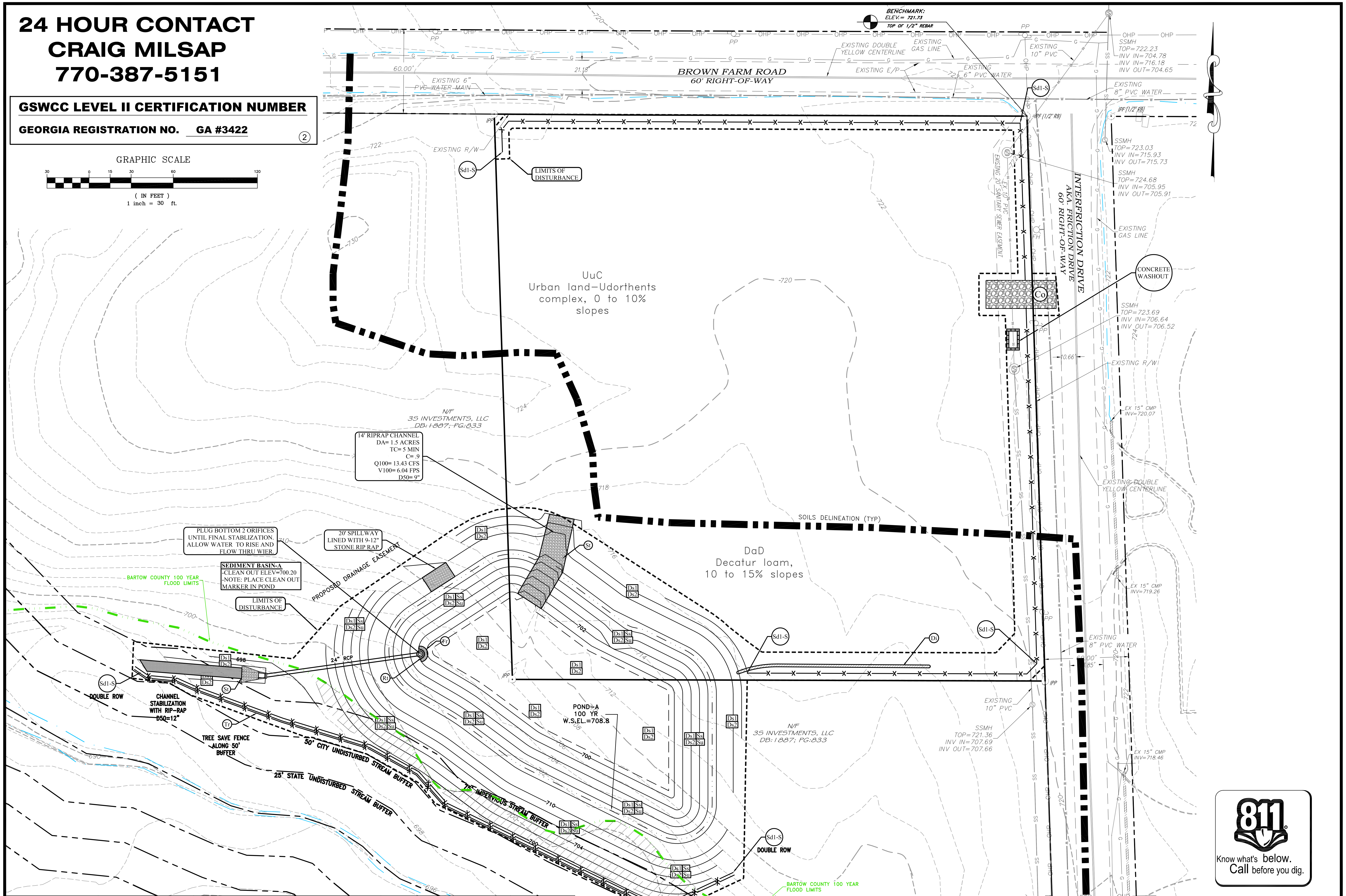
GRAPHIC SCALE
30 0 15 30 60 120
(IN FEET)
1 inch = 30 ft.
BENCHMARK:
ELEV.= 721.73
TOP OF 1/2" REBAR
BROWN FARM ROAD
60' RIGHT-OF-WAY
EXISTING DOUBLE YELLOW CENTERLINE
EXISTING GAS LINE
EXISTING 10" PVC
EXISTING E/P
EXISTING 6" PVC WATER
EXISTING 8" PVC WATER
EXISTING R/W
SSMH
TOP=722.23
INV IN=704.78
INV IN=716.18
INV OUT=704.65
SSMH
TOP=723.03
INV IN=715.93
INV OUT=715.73
SSMH
TOP=724.68
INV IN=705.95
INV OUT=705.91
SSMH
TOP=723.69
INV IN=706.64
INV OUT=706.52
SSMH
TOP=721.36
INV IN=707.69
INV OUT=707.66
IPF (1/2" RB)
INTERFRICTION DRIVE
AKA. FRICTION DRIVE
60' RIGHT-OF-WAY
EXISTING 20' SANITARY SEWER EASEMENT
EX 10" PVC
CONCRETE WASHOUT
EX 15" CMP INV=720.07
EX 15" CMP INV=719.26
EX 15" CMP INV=718.46
EXISTING DOUBLE YELLOW CENTERLINE
EXISTING 10" PVC
LIMITS OF DISTURBANCE
UuC
Urban land–Udorthents complex, 0 to 10% slopes
DaD
Decatur loam, 10 to 15% slopes
SOILS DELINEATION (TYP)
N/F
3S INVESTMENTS, LLC
DB:1887; PG:833
14' RIPRAP CHANNEL
DA= 1.5 ACRES
TC= 5 MIN
C= .9
Q100= 13.43 CFS
V100= 6.04 FPS
D50= 9"
PLUG BOTTOM 2 ORIFICES UNTIL FINAL STABLIZATION. ALLOW WATER TO RISE AND FLOW THRU WIER.
20' SPILLWAY LINED WITH 9-12" STONE RIP RAP
SEDIMENT BASIN-A
-CLEAN OUT ELEV=700.20
-NOTE: PLACE CLEAN OUT MARKER IN POND
BARTOW COUNTY 100 YEAR FLOOD LIMITS
PROPOSED DRAINAGE EASEMENT
24" RCP
POND-A
100 YR
W.S.EL.=708.8
DOUBLE ROW
CHANNEL STABILIZATION WITH RIP-RAP D50=12"
TREE SAVE FENCE ALONG 50' BUFFER
50' CITY UNDISTURBED STREAM BUFFER
25' STATE UNDISTURBED STREAM BUFFER
75' IMPERVIOUS STREAM BUFFER
Sd1-S
Co
Ds1
Ds2
Ss
Su
St
Fr
Rt
Tr
Di
811
Know what's below.
Call before you dig.

Cd-s	STONE CHECKDAM	Dn1	TEMPORARY DOWNDRAIN STRUCTURE	Rt	RETRO FITTING	Sd2-P	INLET SEDIMENT TRAP	Su	SURFACE ROUGHENING	Ds3	DISTURBED AREA STABILIZATION (WITH PERM SEEDING)	Mb	EROSION CONTROL MATTING AND BLANKETS
Co	CONSTRUCTION EXIT	Dn2	PERMANENT DOWNDRAIN STRUCTURE	Sd1	SEDIMENT BARRIER	Sd3	TEMPORARY SEDIMENT BASIN	Ds1	DISTURBED AREA STABILIZATION (WITH MULCHING ONLY)	Ds4	DISTURBED AREA STABILIZATION (SODDING)	Pm	POLY-CRYLAMIDE (PAM)
Di	DIVERSION	Fr	FILTER RING	Sd2-F	INLET SEDIMENT TRAP	St	STORMDRAIN OUTLET PROTECTION	Ds2	DISTURBED AREA STABILIZATION (WITH TEMP SEEDING)	Du	DUST CONTROL ON DISTURBED AREAS	Ss	SLOPE STABILIZATION MATTING

TOTAL SITE AREA = 3.51 ACRES

TOTAL AREA OF INITIAL DISTURBANCE = 1.89 ACRES

PROJECT NO.:
14137

DATE:
04/28/15

REVISIONS:

	DATE	DESCRIPTION
1	3/25/15	CITY SUB
2	4/01/15	OUTLET REV
3	4/27/15	2ND SUB CITY
4		
5		
6		

SOUTHLAND ENGINEERING
CIVIL ENGINEERS - LAND SURVEYORS - LAND PLANNERS
114 OLD MILL ROAD., CARTERSVILLE, GA 30120 PH: 770.387.0440 FAX: 770.607.5151

BARTOW COUNTY
FIRE STATION #9
LOCATED IN LAND LOTS 856 & 857
4TH DISTRICT, 3RD SECTION
CARTERSVILLE, GEORGIA

KARL P. LUTJENS

SHEET TITLE:
INITIAL EROSION CONTROL PLAN

SHEET NO.:
C501

24 HOUR CONTACT
CRAIG MILSAP
770-387-5151

GSWCC LEVEL II CERTIFICATION NUMBER

GEORGIA REGISTRATION NO. GA #3422 ②

GRAPHIC SCALE

30 0 15 30 60 120

(IN FEET)
1 inch = 30 ft.

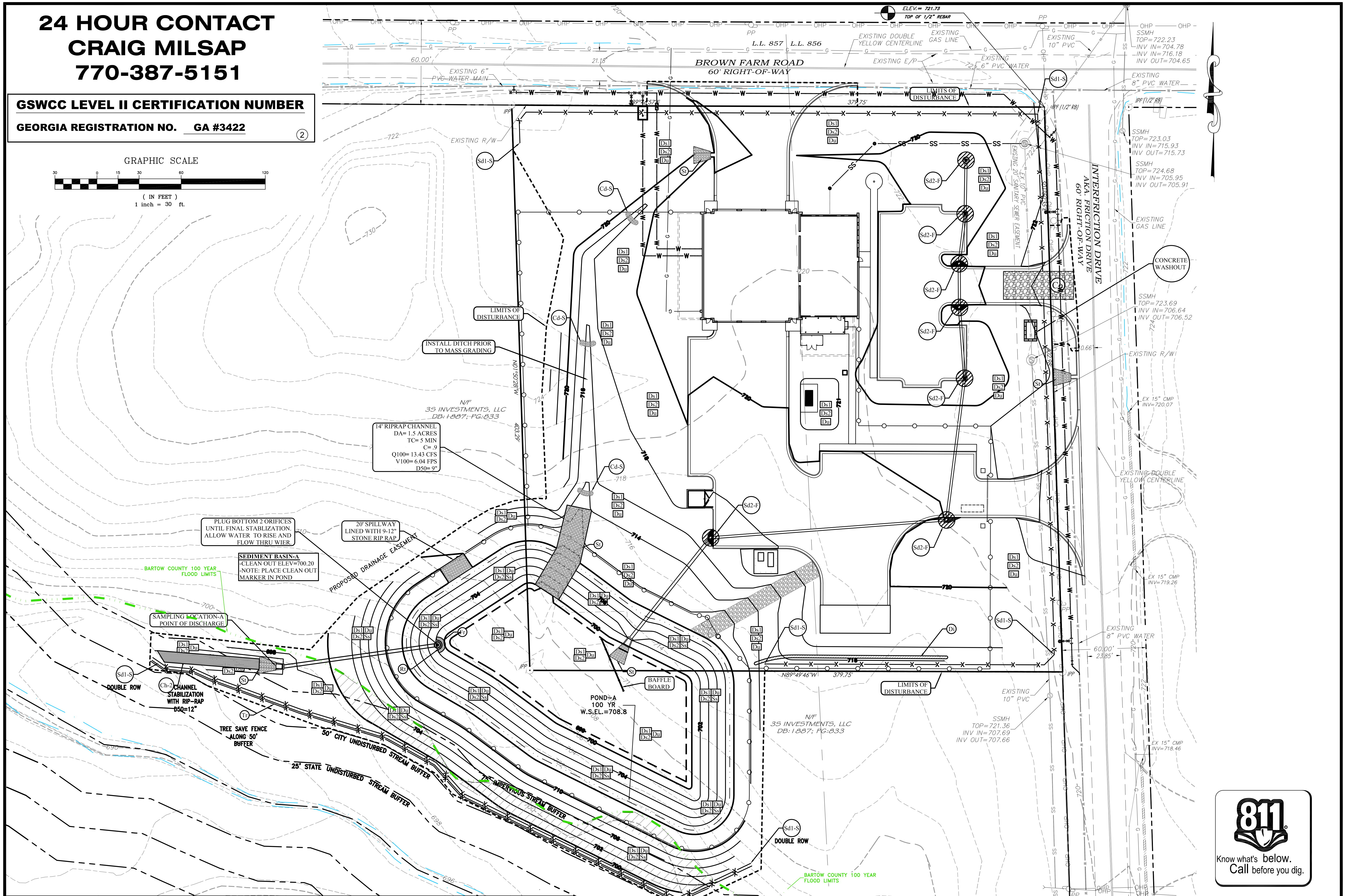
BROWN FARM ROAD
60' RIGHT-OF-WAY
L.L. 857 L.L. 856
ELEV.= 721.73
TOP OF 1/2" REBAR
EXISTING DOUBLE YELLOW CENTERLINE
EXISTING GAS LINE
EXISTING 10" PVC
EXISTING E/P
EXISTING 6" PVC WATER
EXISTING 6" PVC WATER MAIN
EXISTING R/W
60.00'
21.18'
379.75'
N89°49'46"W
SSMH TOP=722.23 INV IN=704.78 INV IN=716.18 INV OUT=704.65
EXISTING 8" PVC WATER
IPF (1/2" RB)
SSMH TOP=723.03 INV IN=715.93 INV OUT=715.73
SSMH TOP=724.68 INV IN=705.95 INV OUT=705.91
EXISTING GAS LINE
INTERFRICTION DRIVE
AKA. FRICTION DRIVE
60' RIGHT-OF-WAY
EXISTING 20' SANITARY SEWER EASEMENT
CONCRETE WASHOUT
SSMH TOP=723.69 INV IN=706.64 INV OUT=706.52
EXISTING R/W
EX 15" CMP INV=720.07
EXISTING DOUBLE YELLOW CENTERLINE
EX 15" CMP INV=719.26
EXISTING 8" PVC WATER
60.00'
23.85'
EXISTING 10" PVC
SSMH TOP=721.36 INV IN=707.69 INV OUT=707.66
EX 15" CMP INV=718.46
LIMITS OF DISTURBANCE
INSTALL DITCH PRIOR TO MASS GRADING
N/F
35 INVESTMENTS, LLC
DB: 1887, PG:833
N01°50'26"W
403.29'
14' RIPRAP CHANNEL
DA= 1.5 ACRES
TC= 5 MIN
C= .9
Q100= 13.43 CFS
V100= 6.04 FPS
D50= 9"
PLUG BOTTOM 2 ORIFICES UNTIL FINAL STABLIZATION. ALLOW WATER TO RISE AND FLOW THRU WEIR.
20' SPILLWAY LINED WITH 9-12" STONE RIP RAP
SEDIMENT BASIN-A
-CLEAN OUT ELEV=700.20
-NOTE: PLACE CLEAN OUT MARKER IN POND
PROPOSED DRAINAGE EASEMENT
BARTOW COUNTY 100 YEAR FLOOD LIMITS
SAMPLING LOCATION-A POINT OF DISCHARGE
DOUBLE ROW
CHANNEL STABILIZATION WITH RIP-RAP D50=12"
TREE SAVE FENCE ALONG 50' BUFFER
50' CITY UNDISTURBED STREAM BUFFER
25' STATE UNDISTURBED STREAM BUFFER
75' IMPERVIOUS STREAM BUFFER
POND-A
100 YR
W.S.EL.=708.8
BAFFLE BOARD
N/F
35 INVESTMENTS, LLC
DB: 1887, PG:833
DOUBLE ROW
BARTOW COUNTY 100 YEAR FLOOD LIMITS
TREE SAVE FENCE ALONG 50' BUFFER
Cd-S
Sd1-S
Sd2-F
St
Rt
Tr
Di
Ch-2
Ds1
Ds2
Du
Ss
Co
IPP
IPF
722
730
720
718
716
714
710
704
702
700
698
696
690

Cd-s	STONE CHECKDAM	Dn1	TEMPORARY DOWNDRAIN STRUCTURE (Label)	Rt	RETRO FITTING	Sd2-P	INLET SEDIMENT TRAP	Su	SURFACE ROUGHENING	Ds3	DISTURBED AREA STABILIZATION (WITH PERM SEEDING)	Mb	EROSION CONTROL MATTING AND BLANKETS
Co	CONSTRUCTION EXIT	Dn2	PERMANENT DOWNDRAIN STRUCTURE (Label)	Sd1	SEDIMENT BARRIER TYPE	Sd3	TEMPORARY SEDIMENT BASIN	Ds1	DISTURBED AREA STABILIZATION (WITH MULCHING ONLY)	Ds4	DISTURBED AREA STABILIZATION (SODDING)	Pm	POLY-CRYLAMIDE (PAM)
Di	DIVERSION	Fr	FILTER RING	Sd2-F	INLET SEDIMENT TRAP	St	STORMDRAIN OUTLET PROTECTION	Ds2	DISTURBED AREA STABILIZATION (WITH TEMP SEEDING)	Du	DUST CONTROL ON DISTURBED AREAS	Ss	SLOPE STABILIZATION MATTING

811
Know what's below.
Call before you dig.

TOTAL SITE AREA = 3.51 ACRES
TOTAL AREA OF DISTURBANCE = 4.70 ACRES
TOTAL AREA OF INITIAL DISTURBANCE = 1.89 ACRES

PROJECT NO.:
14137

DATE:
04/28/15

REVISIONS:

	DATE	DESCRIPTION
1	3/25/15	CITY SUB
2	4/01/15	OUTLET REV
3	4/27/15	2ND SUB CITY
4		
5		
6		

SOUTHLAND
ENGINEERING
CIVIL ENGINEERS - LAND SURVEYORS - LAND PLANNERS
114 OLD MILL ROAD., CARTERSVILLE, GA 30120 PH: 770.387.0440 FAX: 770.607.5151

BARTOW COUNTY
FIRE STATION #9
LOCATED IN LAND LOTS 856 & 857
4TH DISTRICT, 3RD SECTION
CARTERSVILLE, GEORGIA

KARL P. LUTJENS

SHEET TITLE:
INTERMEDIATE EROSION CONTROL PLAN

SHEET NO.:
C502

24 HOUR CONTACT
CRAIG MILSAP
770-387-5151

GSWCC LEVEL II CERTIFICATION NUMBER

GEORGIA REGISTRATION NO. GA #3422 ②

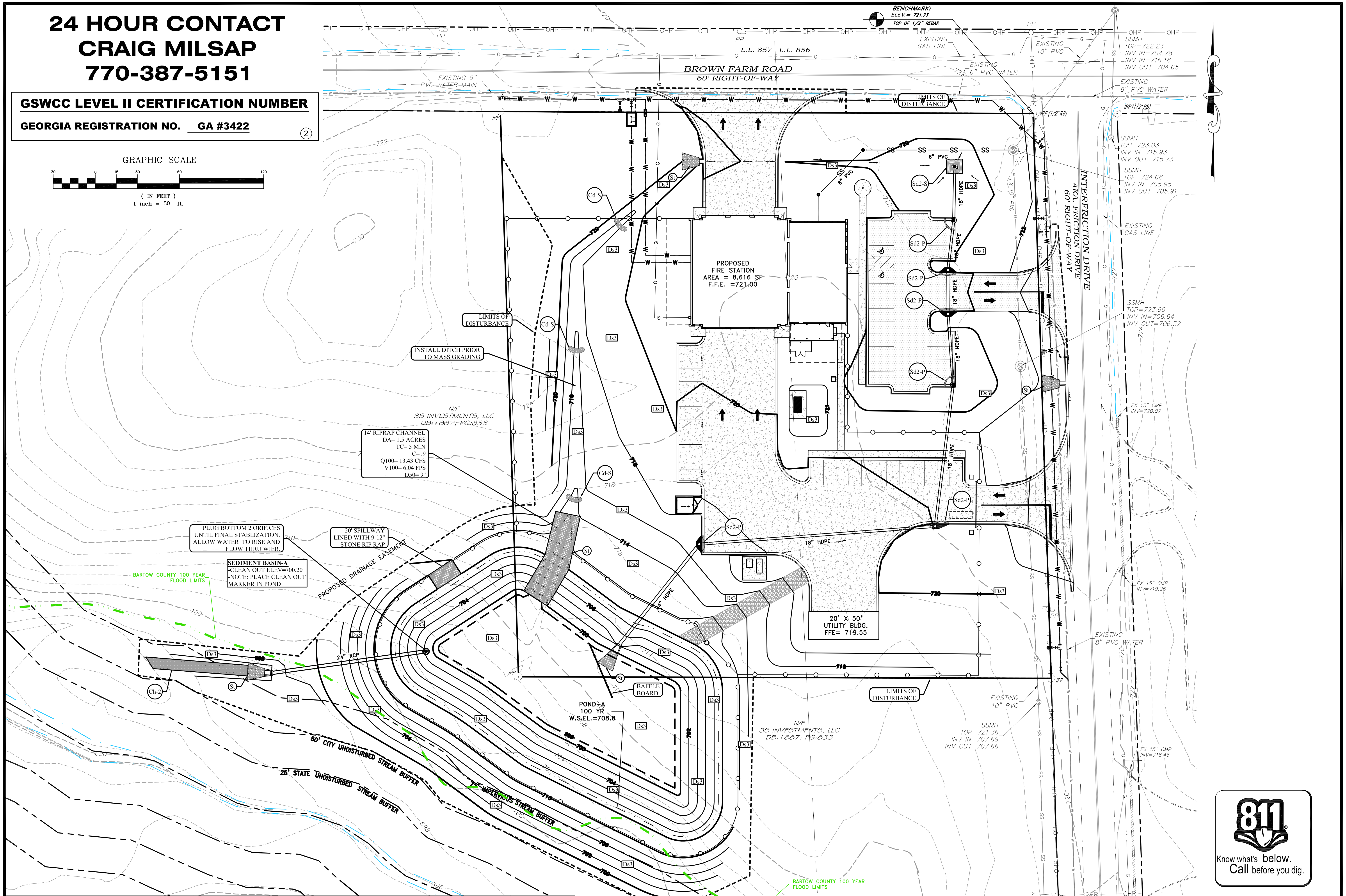
GRAPHIC SCALE
30 0 15 30 60 120
(IN FEET)
1 inch = 30 ft.
BENCHMARK:
ELEV.= 721.73
TOP OF 1/2" REBAR
L.L. 857
L.L. 856
BROWN FARM ROAD
60' RIGHT-OF-WAY
EXISTING 6" PVC WATER MAIN
EXISTING GAS LINE
EXISTING 10" PVC
EXISTING 6" PVC WATER
LIMITS OF DISTURBANCE
SSMH
TOP=722.23
INV IN=704.78
INV IN=716.18
INV OUT=704.65
EXISTING 8" PVC WATER
IPF (1/2" RB)
SSMH
TOP=723.03
INV IN=715.93
INV OUT=715.73
SSMH
TOP=724.68
INV IN=705.95
INV OUT=705.91
EXISTING GAS LINE
INTERFRICTION DRIVE
AKA FRICTION DRIVE
60' RIGHT-OF-WAY
SSMH
TOP=723.69
INV IN=706.64
INV OUT=706.52
EX 15" CMP
INV=720.07
EX 15" CMP
INV=719.26
EXISTING 8" PVC WATER
EXISTING 10" PVC
SSMH
TOP=721.36
INV IN=707.69
INV OUT=707.66
EX 15" CMP
INV=718.46
PROPOSED FIRE STATION
AREA = 8,616 SF
F.F.E. =721.00
6" PVC
18" HDPE
20' X 50' UTILITY BLDG.
FFE= 719.55
LIMITS OF DISTURBANCE
INSTALL DITCH PRIOR TO MASS GRADING
N/F
35 INVESTMENTS, LLC
DB:1887; PG:833
14' RIPRAP CHANNEL
DA= 1.5 ACRES
TC= 5 MIN
C= .9
Q100= 13.43 CFS
V100= 6.04 FPS
D50= 9"
PLUG BOTTOM 2 ORIFICES UNTIL FINAL STABILIZATION. ALLOW WATER TO RISE AND FLOW THRU WIER.
20' SPILLWAY LINED WITH 9-12" STONE RIP RAP
PROPOSED DRAINAGE EASEMENT
SEDIMENT BASIN-A
-CLEAN OUT ELEV=700.20
-NOTE: PLACE CLEAN OUT MARKER IN POND
BARTOW COUNTY 100 YEAR FLOOD LIMITS
24" RCP
POND-A
100 YR
W.S.EL.=708.8
BAFFLE BOARD
N/F
35 INVESTMENTS, LLC
DB:1887; PG:833
50' CITY UNDISTURBED STREAM BUFFER
25' STATE UNDISTURBED STREAM BUFFER
75' IMPERVIOUS STREAM BUFFER
BARTOW COUNTY 100 YEAR FLOOD LIMITS
LIMITS OF DISTURBANCE
Cd-S
Sd2-P
Sd2-S
Ds3
St
Ch-2
IPF
722
730
724
720
718
716
714
710
708
706
704
702
700
698
696
690

Cd-s	STONE CHECKDAM	Dn1	TEMPORARY DOWNDRAIN STRUCTURE	Rt	RETRO FITTING	Sd2-P	INLET SEDIMENT TRAP	Su	SURFACE ROUGHENING	Ds3	DISTURBED AREA STABILIZATION (WITH PERM SEEDING)	Mb	EROSION CONTROL MATTING AND BLANKETS
Co	CONSTRUCTION EXIT	Dn2	PERMANENT DOWNDRAIN STRUCTURE	Sd1	SEDIMENT BARRIER	Sd3	TEMPORARY SEDIMENT BASIN	Ds1	DISTURBED AREA STABILIZATION (WITH MULCHING ONLY)	Ds4	DISTURBED AREA STABILIZATION (SODDING)	Pm	POLY-CRYLAMIDE (PAM)
Di	DIVERSION	Fr	FILTER RING	Sd2-F	INLET SEDIMENT TRAP	St	STORMDRAIN OUTLET PROTECTION	Ds2	DISTURBED AREA STABILIZATION (WITH TEMP SEEDING)	Du	DUST CONTROL ON DISTURBED AREAS	Ss	SLOPE STABILIZATION MATTING

811
Know what's below.
Call before you dig.

TOTAL SITE AREA = 3.51 ACRES

TOTAL AREA OF DISTURBANCE = 4.70 ACRES

TOTAL AREA OF INITIAL DISTURBANCE = 1.89 ACRES

PROJECT NO.:
14137

DATE:
04/28/15

REVISIONS:

	DATE	DESCRIPTION
1	3/25/15	CITY SUB
2	4/01/15	OUTLET REV
3	4/27/15	2ND SUB CITY
4		
5		
6		

SOUTHLAND
ENGINEERING
CIVIL ENGINEERS - LAND SURVEYORS - LAND PLANNERS
114 OLD MILL ROAD., CARTERSVILLE, GA 30120 PH: 770.387.0440 FAX: 770.607.5151

BARTOW COUNTY
FIRE STATION #9
LOCATED IN LAND LOTS 856 & 857
4TH DISTRICT, 3RD SECTION
CARTERSVILLE, GEORGIA

KARL P. LUTJENS

SHEET TITLE:
FINAL EROSION CONTROL PLAN

SHEET NO.:
C503

EROSION CONTROL NOTES

⑱ THE ESCAPE OF SEDIMENT FROM THE SITE SHALL BE PREVENTED BY THE INSTALLATION OF EROSION AND SEDIMENT CONTROL MEASURES AND PRACTICES PRIOR TO LAND DISTURBING ACTIVITIES.

⑲ EROSION CONTROL MEASURES WILL BE MAINTAINED AT ALL TIMES. IF FULL IMPLEMENTATION OF THE APPROVED PLAN DOES NOT PROVIDE FOR EFFECTIVE EROSION CONTROL, ADDITIONAL EROSION AND SEDIMENT CONTROL MEASURES SHALL BE IMPLEMENTED TO CONTROL OR TREAT THE SEDIMENT SOURCE.

⑳ ANY DISTURBED AREA LEFT EXPOSED FOR A PERIOD GREATER THAN 14 DAYS SHALL BE STABILIZED WITH MULCH OR TEMPORARY SEEDING.

EROSION AND SEDIMENT CONTROL MEASURES SHALL BE INSPECTED AT LEAST WEEKLY, AFTER EACH RAIN, AND REPAIRED AS NECESSARY.

ADDITIONAL EROSION AND SEDIMENT CONTROL MEASURES SHALL BE INSTALLED IF DETERMINED NECESSARY BY ON-SITE INSPECTION.

ALL SILT FENCES MUST MEET THE REQUIREMENTS OF SECTION 171-TEMPORARY SILT FENCE FOR THE DEPARTMENT OF TRANSPORTATION, QUALIFIED PRODUCTS LIST #36.

SILT FENCES SHALL NOT BE PLACED IN STREAM BUFFER OR FLOODPLAINS, UNLESS UTILIZED FOR THE CONSTRUCTION OF AN EXEMPT ACTIVITY (I.E. ROADWAY DRAINAGE STRUCTURES, SEWER/WATER CROSSINGS, OR DRAINAGE STRUCTURES) PER THE APPROVED PLANS. FOR SUCH DISTURBANCES WITHIN THE BUFFER, THE AREA SHALL BE IMMEDIATELY STABILIZED USING EROSION CONTROL MATTING AND/OR BLANKETS ONCE THE ACTIVITY IS COMPLETE.

SEDIMENT STORAGE VOLUME (67 CY/ACRE) MUST BE INSTALLED PRIOR TO ANY OTHER LAND DISTURBANCE ACTIVITY AND IN PLACE UNTIL FINAL STABILIZATION OCCURS.

FOR EACH SITE ON WHICH LAND DISTURBING ACTIVITY OCCURS, EACH ENTITY OR PERSON ACTING AS EITHER A PRIMARY, SECONDARY, OR TERTIARY PERMITTEE, AS DEFINED IN THE STATE GENERAL PERMIT, SHALL HAVE AS A MINIMUM ONE PERSON WHO IS IN RESPONSIBLE CHARGE OF EROSION AND SEDIMENTATION CONTROL ACTIVITIES ON BEHALF OF SAID ENTITY OR PERSON AND MEETS THE APPLICABLE (LEVEL 1A) EDUCATION OR TRAINING CERTIFICATION REQUIREMENTS (O.C.G.A. 12-7-19(A)(2)).

ALL TEMPORARY AND PERMANENT SEEDING MUST BE PERFORMED AT THE APPROPRIATE SEASON. IN SUCH INSTANCES WHERE THE ESTABLISHMENT OF VEGETATION IS INOPPORTUNE DUE TO SEASON OR DROUGHT, DISTURBED AREAS SHALL BE TEMPORARILY STABILIZED USING 2"-4" OF MULCH (DS1). ADDITIONAL PLANTINGS WILL BE NECESSARY IF A SUFFICIENT STAND OF GRASS FAILS TO GROW.

A COPY OF THE APPROVED LAND DISTURBANCE PLAN AND PERMIT SHALL BE PRESENT ON THE SITE AT ALL TIMES.

PRIOR TO COMMENCING LAND DISTURBANCE ACTIVITY, THE LIMITS OF LAND DISTURBANCE AND ALL STREAM BUFFERS SHALL BE CLEARLY AND ACCURATELY DEMARCATED WITH STAKES, RIBBONS, OR OTHER APPROPRIATE MEANS. THE LOCATION AND EXTENT OF ALL AUTHORIZED LAND DISTURBANCE ACTIVITY SHALL BE DEMARCATED FOR THE DURATION OF THE CONSTRUCTION ACTIVITY. NO LAND DISTURBANCE SHALL OCCUR OUTSIDE THE APPROVED LIMITS INDICATED ON THE APPROVED PLANS.

PRIOR TO ANY OTHER CONSTRUCTION, A STABILIZED CONSTRUCTION ENTRANCE SHALL BE CONSTRUCTED AT EACH POINT OF ENTRY TO OR EXIT FROM THE SITE OR ONTO ANY PUBLIC ROADWAY.

THE FOLLOWING INITIAL EROSION CONTROL MEASURES SHALL BE IMPLEMENTED PRIOR TO ANY OTHER CONSTRUCTION ACTIVITY.

1. THE CONSTRUCTION EXIT, CONSISTING OF A MINIMUM PAD SIZE OF 20 FEET BY 50 FEET WITH A MINIMUM OF 6" THICK STONE, SHALL BE PLACED AS SHOWN ON THE PLAN. THE STONE SIZE SHOULD CONSIST OF COURSE AGGREGATE BETWEEN 1-1/2" & 3-1/2" IN DIAMETER AND OVERLAID ON A GEOTEXTILE UNDERLINER. THE GEOTEXTILE UNDERLINER SHALL MEET THE REQUIREMENTS OF AASHTO M288-96, SECTION 7.3 SEPARATION REQUIREMENTS.
2. IMMEDIATELY AFTER THE ESTABLISHMENT OF CONSTRUCTION ENTRANCE/EXITS, ALL PERIMETER EROSION CONTROL AND TEMPORARY SEDIMENT BASINS SHALL BE INSTALLED AS SHOWN ON THE INITIAL PHASE EROSION CONTROL PLAN.
3. TYPE "C" SILT FENCE SHOULD BE INSTALLED AT THE PERIMETER OF THE DISTURBED AREA AS SHOWN ON THE PLAN. THE SILT FENCE SHOULD BE PLACED IN ACCORDANCE WITH THE MANUAL FOR EROSION CONTROL IN GEORGIA, TABLE 5-20.2. THE SILT FENCE SHOULD BE KEPT ERECT AT ALL TIMES AND REPAIRED WHEN REQUESTED BY THE SITE INSPECTOR OR THE PROJECT DESIGN PROFESSIONAL OF RECORD. SILT SHOULD BE REMOVED WHEN ACCUMULATION REACHES ½ HEIGHT OF THE BARRIER. THE PERIMETER SILT FENCE SHOULD BE INSPECTED DAILY FOR ANY FAILURES. ANY FAILURES OF SAID FENCING SHOULD BE REPAIRED IMMEDIATELY.
4. INLET SEDIMENT PROTECTION MEASURES SHALL BE INSTALLED ON ALL EXISTING STORM STRUCTURES AS SHOWN ON THE PLAN. SEE SEPARATE DETAILS FOR SPECIFICS ON TYPE OF INLET PROTECTION SPECIFIED.
5. STONE CHECK DAMS SHALL BE INSTALLED IN AREAS OF CONCENTRATED FLOWS AS SHOWN ON THE PLAN.
6. TREE PROTECTION FENCING SHOULD BE INSTALLED PRIOR TO THE START OF ANY LAND DISTURBANCE ACTIVITY AND MAINTAINED UNTIL FINAL LANDSCAPE IS INSTALLED. THE TREE PROTECTION FENCING SHOULD BE INSPECTED DAILY. ANY FAILURES OF SAID FENCING SHOULD BE REPAIRED IMMEDIATELY.

ADDITIONAL SILT BARRIERS MUST BE PLACED AS SHOWN ON THE PLAN AS ACCESS IS OBTAINED DURING CLEARING. NO GRADING SHALL TAKE PLACE UNTIL SILT BARRIER INSTALLATION AND SEDIMENT PONDS ARE CONSTRUCTED AS SHOWN ON THE CLEARING PHASE EROSION CONTROL PLAN.

MULCH OR TEMPORARY GRASSING SHALL BE APPLIED TO ALL EXPOSED AREAS WITHIN 14 DAYS OF LAND DISTURBANCE.

SEDIMENT AND EROSION CONTROL MEASURES SHOULD BE CHECKED AFTER EACH RAIN EVENT. EACH DEVICE IS TO BE MAINTAINED OR REPLACED IF SEDIMENT ACCUMULATION HAS REACHED ONE HALF THE CAPACITY OF THE DEVICE.

THE CONSTRUCTION EXIT SHALL BE MAINTAINED IN A CONDITION, WHICH WILL PREVENT TRACKING OR FLOW OF MUD ONTO PUBLIC RIGHT-OF-WAY. THIS MAY REQUIRE PERIODIC TOP DRESSING WITH 1-3" OF STONE, AS CONDITIONS DEMAND. ALL MATERIALS SPILLED, DROPPED, WASHED, OR TRACKED FROM VEHICLE ON TO PUBLIC ROADWAY OR INTO STORM DRAIN MUST BE REMOVED IMMEDIATELY.

CONTRACTOR SHALL INSPECT EROSION CONTROL MEASURES AT THE END OF EACH WORKING DAY TO ENSURE MEASURES ARE FUNCTIONING PROPERLY.

FAILURE TO INSTALL, OPERATE, OR MAINTAIN ALL EROSION CONTROL MEASURES WILL RESULT IN ALL CONSTRUCTION BEING STOPPED ON THE JOB UNTIL SUCH MEASURES ARE CORRECTED BACK TO THE APPROVED EROSION CONTROL PLANS.

THE SITE CONTRACTOR WILL BE RESPONSIBLE FOR MAINTENANCE OF ALL EROSION CONTROL MEASURES INCLUDING REPLACING OR REPAIRING ANY DAMAGED DEVICES DUE TO ANY CONSTRUCTION ACTIVITY BY OTHERS.

EARTHWORK OPERATIONS IN THE VICINITY OF STREAM BUFFERS SHALL BE CAREFULLY CONTROLLED TO AVOID DUMPING OR SLOUGHING INTO THE BUFFER AREAS.

SEDIMENT SHALL NOT BE WASHED INTO INLETS. IT SHALL BE REMOVED FROM THE SEDIMENT TRAPS AND DISPOSED OF AND STABILIZED SO THAT IT WILL NOT ENTER THE INLETS AGAIN.

EROSION CONTROL DEVICES SHALL BE INSTALLED IMMEDIATELY AFTER GROUND DISTURBANCE OCCURS. THE LOCATION OF SOME OF THE EROSION CONTROL DEVICES MAY HAVE TO BE ALTERED FROM THAT SHOWN ON THE APPROVED PLANS IF DRAINAGE PATTERNS DURING THE CONSTRUCTION ARE DIFFERENT FROM THE PROPOSED DRAINAGE PATTERNS. IT IS THE CONTRACTOR'S RESPONSIBILITY TO ACCOMPLISH EROSION CONTROL FOR ALL DRAINAGE PATTERNS CREATED AT VARIOUS STAGES DURING CONSTRUCTION. ANY DIFFICULTY IN CONTROLLING EROSION DURING ANY PHASE OF CONSTRUCTION SHALL BE REPORTED TO THE DESIGN PROFESSIONAL IMMEDIATELY.

THE CONTRACTOR SHALL FURNISH AND MAINTAIN ALL NECESSARY BARRICADES WHILE ROADWAY FRONTAGE IMPROVEMENTS ARE BEING MADE.

TYPE "C" SILT FENCE SHOULD BE INSTALLED AT THE TOE OF ALL FILL SLOPES 10 FEET GREATER IN HEIGHT. THE SILT FENCE SHOULD BE PLACED IN ACCORDANCE WITH THE MANUAL FOR EROSION CONTROL IN GEORGIA, TABLE 6-20.0. THE SILT FENCE SHALL BE MAINTAINED UNTIL PERMANENT GROUND COVER IS ESTABLISHED ON THE SLOPE. SILT SHALL BE REMOVED WHEN ACCUMULATION REACHES ½ HEIGHT OF THE BARRIER. ADDITIONALLY, DIVERSION DIKES SHALL BE CONSTRUCTED ALONG THE TOP OF ALL SAID FILL SLOPES WITH THE USE OF TEMPORARY DOWN DRAINS TO CONTROL STORM WATER RUN OFF AS SHOWN ON THE PLANS. SEE SEPARATE DETAILS FOR ADDITIONAL INFORMATION.

THE CONTRACTOR SHALL BE RESPONSIBLE FOR ESTABLISHING BARRIERS AT THE TOE OF SLOPES UNDER CONSTRUCTION. THESE BARRIERS SHALL BE AS SHOWN IN THE PLANS. THESE BARRIERS MAY BE RELOCATED AND REUSED AFTER PERMANENT SLOPE STABILIZATION BECOMES FULLY ESTABLISHED. AS THEY ARE RELOCATED, ANY DEFECTIVE MATERIALS IN THE BARRIER SHALL BE REPLACED. IN ADDITION, ALL DEBRIS AND SILT AT THE PREVIOUS LOCATION SHALL BE REMOVED.
CUT AND FILL SLOPES ARE NOT TO EXCEED "2H:1V".

INLET SEDIMENT PROTECTION MEASURES SHALL BE INSTALLED ON ALL STORM STRUCTURES AS THEY ARE CONSTRUCTED. SEE PLAN VIEW FOR SPECIFIC TYPE AND SEPARATE DETAILS FOR ADDITIONAL INFORMATION ON TYPE OF INLET PROTECTION SPECIFIED.

STORM DRAIN OUTLET PROTECTION SHALL BE PLACED AT ALL OUTLET HEADWALLS AS SOON AS THE HEADWALL IS CONSTRUCTED. SEE SEPARATE DETAILS FOR ADDITIONAL INFORMATION.

GSWCC LEVEL II CERTIFICATION NUMBER
GEORGIA REGISTRATION NO. GA #3422 ②

EROSION CONTROL NARRATIVE: ㉞

INITIAL PHASE CONSTRUCTION SCHEDULE NOTES:
- STAKE CLEARING LIMITS
- PRIOR TO BEGINNING MASS CLEARING CONTRACTOR TO INSTALL SILT FENCE, CONSTRUCTION ENTRANCE, SEDIMENT BASINS.
- CONTRACTOR TO DIRECT STORMWATER TO THE SEDIMENT BASINS.
- INSTALL ALL EROSION CONTROL MEASURES, DIVERSION DITCHES AS SHOWN ON THE INITIAL PHASE PLAN (EROSION CONTROL MEASURES TO BE CONSTRUCTED AND FULLY FUNCTIONAL PRIOR TO ANY GRADING).
- INSTALL CONCRETE WASHOUT AREA
- BEGIN CLEARING AND GRUBBING.

INTERMEDIATE PHASE CONSTRUCTION SCHEDULE NOTES:
- BEGIN GRADING SITE
- BEGIN INSTALLING STORM (IF APPLICABLE)
- DIRECT STORMWATER TO SEDIMENT BASINS DURING MASS GRADING OF THE PROPERTY.
- INSTALL INLET SEDIMENT PROTECTION (SD2-F) (IF APPLICABLE)
- INSTALL OUTLET PROTECTION AT STORM OUTFALLS
- PROVIDE DS1, DS2 & Ss FOR AREAS THAT HAVE NOT BEEN DISTURBED FOR MORE THAN 14 DAYS.
- MAINTAIN BMP'S AS NEEDED.

FINAL PHASE CONSTRUCTION SCHEDULE NOTES:
- MAINTAIN BMP'S AS GRADING PROGRESSES.
- GRADE PARKING AREAS AND BUILDING PADS.
- BEGIN INSTALLING CURBING, SIDEWALKS, BASE AND PAVING.
- ONCE CURB IS IN PLACE AND STORM DRAIN TOPS HAVE BEEN INSTALLED INSTALL SD2-P.
- BEGIN INSTALL PERMANENT VEGETATION AND LANDSCAPING, Ds3 & Ds4.
- REMOVE TEMPORARY EROSION CONTROL MEASURES AFTER SITE IS 100% STABILIZED.
- REMOVE RETROFIT FROM DETENTION POND OUTLET.

24 HOUR CONTACT
CRAIG MILSAP
770-387-5151

811
Know what's below.
Call before you dig.

㊽ STRUCTURAL PRACTICES

CODE	PRACTICE	DETAIL	MAP SYMBOL	DESCRIPTION
Cd	CHECKDAM	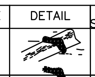		A small temporary barrier or dam constructed across a swale, drainage ditch or area of concentrated flow.
Ch	CHANNEL STABILIZATION	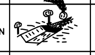		Improving, constructing or stabilizing an open channel, existing stream, or ditch.
Co	CONSTRUCTION EXIT	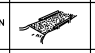	Co (Label)	A crushed stone pad located at the construction site exit to provide a place for removing mud from tires thereby protecting public streets.
Cr	CONSTRUCTION ROAD STABILIZATION	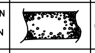	Cr	A travelway constructed as part of a construction plan including access roads, subdivision roads, parking areas and other on-site vehicle transportation routes.
Dc	STREAM DIVERSION CHANNEL	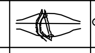	Dc	A temporary channel constructed to convey flow around a construction site while a permanent structure is being constructed.
Di	DIVERSION			An earth channel or dike located above, below, or across a slope to divert runoff. This may be a temporary or permanent structure.
Dn1	TEMPORARY DOWNDRAIN STRUCTURE		Dn1 (Label)	A flexible conduit of heavy-duty fabric or other material designed to safely conduct surface runoff down a slope. This is temporary and inexpensive.
Dn2	PERMANENT DOWNDRAIN STRUCTURE		Dn2 (Label)	A paved chute, pipe, sectional conduit or similar material designed to safely conduct surface runoff down a slope.
Fr	FILTER RING	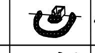	Fr	A temporary stone barrier constructed at storm drain inlets and pond outlets.
Ga	GABION			Rock filter baskets which are hand-placed into position forming soil stabilizing structures.
Gr	GRADE STABILIZATION STRUCTURE		Gr	Permanent structures installed to protect channels or waterways where otherwise the slope would be sufficient for the running water to form gullies.
Lv	LEVEL SPREADER			A structure to convert concentrated flow of water into less erosive sheet flow. This should be constructed only on undisturbed soils.
Rd	ROCK FILTER DAM	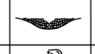		A permanent or temporary stone filter dam installed across small streams or drainageways.
Re	RETAINING WALL		Re (Label)	A wall installed to stabilize out and fill slopes where maximum permissible slopes are not obtainable. Each situation will require special design.
Rt	RETRO FITTING	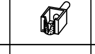	Rt (Label)	A device or structure placed in front of a permanent stormwater detention pond outlet structure to serve as a temporary sediment filter.
Sd1	SEDIMENT BARRIER	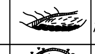	TYPE	A barrier to prevent sediment from leaving the construction site. It may be sandbags, bales of straw or hay, brush, logs and poles, gravel, or a silt fence.
Sd2	INLET SEDIMENT TRAP		(Indicate	An impounding area created by excavating around a storm drain drop inlet. The excavated area will be filled and stabilized on completion of construction activities.
Sd3	TEMPORARY SEDIMENT BASIN			A basin created by excavation or a dam across a waterway. The surface water runoff is temporarily stored allowing the bulk of the sediment to drop out.
Sr	TEMPORARY STREAM CROSSING	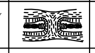	Sr (Label)	A temporary bridge or culvert-type structure protecting a stream or watercourse from damage by crossing construction equipment.
St	STORMDRAIN OUTLET PROTECTION		St	A paved or short section of riprap channel at the outlet of a storm drain system preventing erosion from the concentrated runoff.
Su	SURFACE ROUGHENING	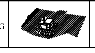	Su	A rough soil surface with horizontal depressions on a contour or slopes left in a roughened condition after grading.

VEGETATIVE MEASURES

CODE	PRACTICE	DETAIL	MAP SYMBOL	DESCRIPTION
Ds1	DISTURBED AREA STABILIZATION (WITH MULCHING ONLY)	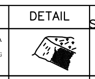	Ds1	Establishing temporary protection for disturbed areas where seedlings may not have a suitable growing season to produce an erosion retarding cover.
Ds2	DISTURBED AREA STABILIZATION (WITH TEMP SEEDING)	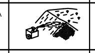	Ds2	Establishing a temporary vegetative cover with fast growing seedings on disturbed areas.
Ds3	DISTURBED AREA STABILIZATION (WITH PERM SEEDING)		Ds3	Establishing a permanent vegetative cover such as trees, shrubs, vines, grasses, sod or legumes on disturbed areas.
Ds4	DISTURBED AREA STABILIZATION (SODDING)	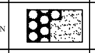	Ds4	A permanent vegetative cover using sods on highly erodable or critically eroded lands.
Du	DUST CONTROL ON DISTURBED AREAS	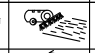	Du	Controlling surface and air movement of dust on construction site, roadways and similar sites.
Mb	EROSION CONTROL MATTING AND BLANKETS	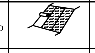	Mb	The installation of a protective covering (blanket) or soil stabilization mat on a prepared planting area of a steep slope, channel, or shoreline.
Pm	POLY-CRYLAMIDE (PAM)	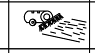	Pm	The land application of product containing anionic polyacrylamide (PAM) as temporary soil binding agents to reduce soil erosion.
Sb	STREAMBANK STABILIZATION (USING PERM VEGETATION)	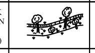	Sb	The use of readily available native plant materials to maintain and enhance streambanks, or to prevent, or restore and repair small streambank erosion problems.
Tb	TACKIFIERS AND BINDERS	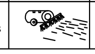	Tb	Substance used to anchor straw or hay mulch by causing the organic material to bind together.

GENERAL CONSTRUCTION SCHEDULE ㉗

Approx. Start Date: APRIL 2015 , Approx. Completion Date: JANUARY 2016

BEGIN CONSTRUCTION APRIL 2015	APRIL	MAY	JUNE	JULY	AUGUST	SEPTEMBER	OCTOBER	NOVEMBER	DECEMBER	JANUARY
*PLACE CONSTRUCTION ENTRANCE, INSTALL SILT FENCE & TREE PROTECTION FENCE	■									
BEGIN INITIAL CLEARING OF SITE, INSTALL TEMPORARY SEDIMENT TRAPS, USE BRUSH PILE FILTERS, SEED & MULCH BARE GROUND.	■	■								
BEGIN GRADING, INSTALL STORM SYSTEM WITH SD2 PROTECTION. SEED AND MULCH BARE AREAS.		■								
GRADE DRIVES AND BUILDING PADS, BEGIN INSTALLATION OF WATER AND SEWER MAINTAIN TEMPORARY SEDIMENT TRAPS.			■							
FINAL GRADE PARKING AND BUILDING PADS, INSTALL CURBING & PAVING BASE, CONVERT SD2-F TO SD2-P, SEED ANY BARE AREAS, BEGIN BUILDING CONSTRUCTION.				■						
CONTINUE WITH BUILDING CONSTRUCTION, BEGIN PERMANENT LANDSCAPING IN AREAS AVAILABLE.					■	■	■	■		
INSTALL FINAL PAVING, INSTALL PERMANENT LANDSCAPING, FILL IN SEDIMENT TRAPS AND STABILIZE WITH PERMANENT VEGETATION, REMOVE SD2-P, REMOVE SILT FENCE AND TREE PROTECTION FENCE, REMOVE CONSTRUCTION ENTRANCE.									■	■
MAINTAIN CONSTRUCTION ENTRANCE, TREE SAVE FENCE, SILT FENCE, CHECK DAMS, FILTER RINGS, INLET PROTECTION, DIVERSION DITCHES, AND TEMPORARY SEDIMENT TRAPS.	■	■	■	■	■	■	■	■	■	■

* SEDIMENT AND EROSION CONTROL MEASURES TO BE INSPECTED DAILY. MAINTAIN BMP'S THROUGHOUT LAND DISTURBANCE ACTIVITY.

PROJECT NO.:
14137

DATE:
04/28/15

REVISIONS:

	DATE	DESCRIPTION
1	3/25/15	CITY SUB
2	4/01/15	OUTLET REV
3	4/27/15	2ND SUB CITY
4		
5		
6		

SOUTHLAND
ENGINEERING
CIVIL ENGINEERS - LAND SURVEYORS - LAND PLANNERS
114 OLD MILL ROAD., CARTERSVILLE, GA 30120 PH: 770.387.0440 FAX: 770.607.5151

BARTOW COUNTY
FIRE STATION #9
LOCATED IN LAND LOTS 856 & 857
4TH DISTRICT, 3RD SECTION
CARTERSVILLE, GEORGIA

KARL P. LUTJENS
No. 28430

SHEET TITLE:
EROSION CONTROL NOTES

SHEET NO.:
C504

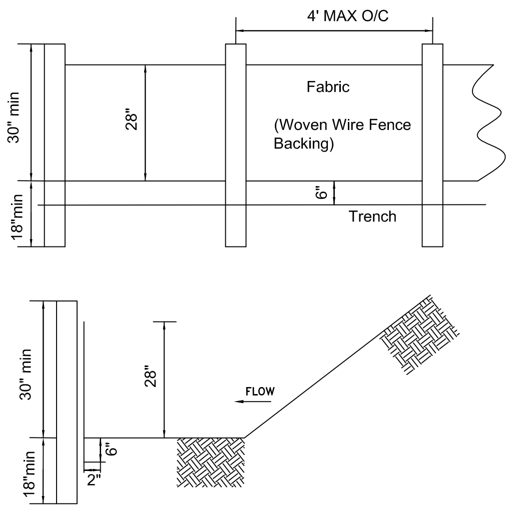

SILT FENCE

THE MANUFACTURER SHALL HAVE EITHER AN APPROVED COLOR MARK YARN IN THE FABRIC OR LABEL THE FABRICATED SILT FENCE WITH BOTH THE MANUFACTURER AND FABRIC NAME EVERY 100 FEET.

THE TEMPORARY SILT FENCE SHALL BE INSTALLED ACCORDING TO THIS SPECIFICATION, AS SHOWN ON THE PLANS OR AS DIRECTED BY THE ENGINEER. FOR INSTALLATION OF THE FABRIC, SEE DETAIL. POST INSTALLATION SHALL START AT THE CENTER OF THE LOW POINT (IF APPLICABLE) WITH THE REMAINING POSTS SPACED 4 FEET APART FOR TYPE SENSITIVE SILT FENCE. ONLY STEEL POST SHALL BE USED WITH TYPE SENSITIVE SILT FENCE. POSTS SHALL BE 4' IN LENGTH, 1.3 LBS/ FT.

MAINTENANCE

SEDIMENT SHALL BE REMOVED ONCE IT HAS ACCUMULATED TO ONE-HALF THE ORIGINAL HEIGHT OF THE BARRIER. FILTER FABRIC SHALL BE REPLACED WHENEVER IT HAS DETERIORATED TO SUCH AN EXTENT THAT THE EFFECTIVENESS OF THE FABRIC IS REDUCED (APPROXIMATELY SIX MONTHS). TEMPORARY SEDIMENT BARRIERS SHALL REMAIN IN PLACE UNTIL DISTURBED AREAS HAVE BEEN PERMANENTLY STABILIZED. ALL SEDIMENT ACCUMULATED AT THE BARRIER SHALL BE REMOVED AND PROPERLY DISPOSED OF BEFORE THE BARRIER IS REMOVED.

Sd1-S SILT FENCE-TYPE SENSITIVE

L = THE DISTANCE SUCH THAT POINTS A AND B ARE OF EQUAL ELEVATION

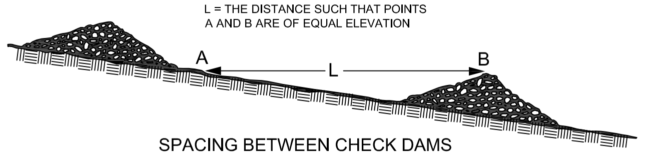

SPACING BETWEEN CHECK DAMS

STONE CHECK DAMS

STONE CHECK DAMS SHOULD BE CONSTRUCTED OF GRADED SIZE 2-10" STONE. MECHANICAL OR HAND PLACEMENT SHALL BE REQUIRED TO INSURE COMPLETE COVERAGE OF ENTIRE WIDTH OF DITCH OR SWALE, AND THAT CENTER OF DAM IS LOWER THAN EDGES.

STONE CHECK DAM

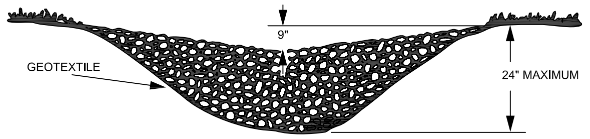

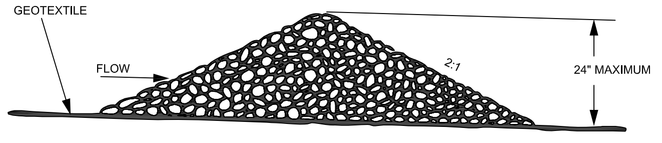

MAINTENANCE

PERIODIC INSPECTION AND REQUIRED MAINTENANCE MUST BE PROVIDED. SEDIMENT SHALL BE REMOVED WHEN IT REACHES A DEPTH OF ONE-HALF THE ORIGINAL DAM HEIGHT OR BEFORE. IF THE AREA IS TO BE MOWED, CHECK DAMS SHALL BE REMOVED ONCE FINAL STABILIZATION HAS OCCURRED. OTHERWISE, CHECK DAMS MAY REMAIN IN PLACE PERMANENTLY. AFTER REMOVAL, THE AREA BENEATH THE DAM SHALL BE SEEDED AND MULCHED IMMEDIATELY.

Cd-S CHECK DAM (STONE)

---

24 HOUR CONTACT
CRAIG MILSAP
770-387-5151

GSWCC LEVEL II CERTIFICATION NUMBER

GEORGIA REGISTRATION NO. GA #3422 ②

811 Know what's below. Call before you dig.

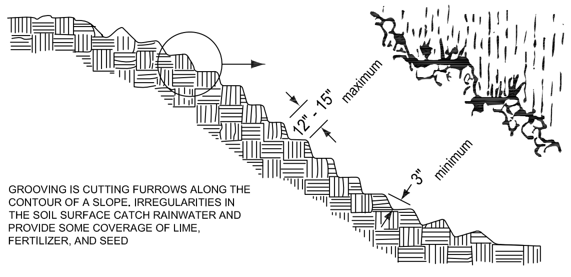

GROOVING IS CUTTING FURROWS ALONG THE CONTOUR OF A SLOPE. IRREGULARITIES IN THE SOIL SURFACE CATCH RAINWATER AND PROVIDE SOME COVERAGE OF LIME, FERTILIZER, AND SEED

GROOVING SLOPES

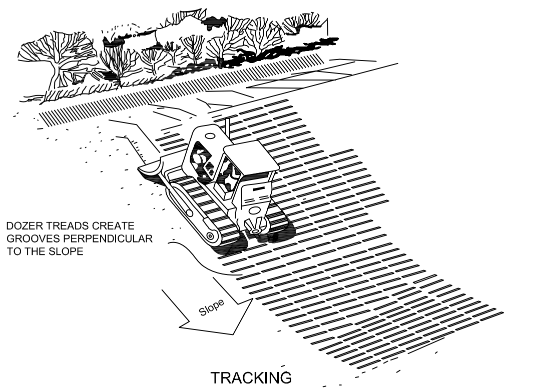

DOZER TREADS CREATE GROOVES PERPENDICULAR TO THE SLOPE

TRACKING

SURFACE ROUGHENING

THE PURPOSES OF SURFACE ROUGHENING ARE TO AID IN ESTABLISHMENT OF VEGETATIVE COVER WITH SEED, TO REDUCE RUNOFF VELOCITY AND INCREASE INFILTRATION, AND TO REDUCE EROSION AND PROVIDE FOR SEDIMENT TRAPPING.

ALL SLOPES STEEPER THAN 3:1 REQUIRE SURFACE ROUGHENING, EITHER STAIR-STEP GRADING, GROOVING, FURROWING, OR TRACKING IF THEY ARE TO BE STABILIZED WITH VEGETATION. HOWEVER, IF THE SLOPE IS TO BE STABILIZED WITH EROSION CONTROL BLANKETS OR SOIL REINFORCEMENT MATTING, THE SOIL SURFACE SHOULD NOT BE ROUGHENED.

AREAS WITH GRADES LESS STEEP THAN 3:1 SHOULD HAVE THE SOIL SURFACE LIGHTLY ROUGHENED AND LOOSENED TO A DEPTH OF 2 TO 4 INCHES PRIOR TO SEEDING. AREAS WHICH HAVE BEEN GRADED AND WILL NOT BE STABILIZED IMMEDIATELY MAY BE ROUGHENED TO REDUCE RUNOFF VELOCITY UNTIL SEEDING TAKES PLACE. SLOPES WITH A STABLE ROCK FACE DO NOT REQUIRE ROUGHENING OR STABILIZATION.

GROOVING

GROOVING CONSISTS OF USING MACHINERY TO CREATE A SERIES OF RIDGES AND DEPRESSIONS WHICH RUN PERPENDICULAR TO THE SLOPE (ON THE CONTOUR). GROOVES MAY BE MADE WITH ANY APPROPRIATE IMPLEMENT WHICH CAN BE SAFELY OPERATED ON THE SLOPE AND WHICH WILL NOT CAUSE UNDUE COMPACTION.

SUGGESTED IMPLEMENTS INCLUDE DISCS, TILLERS, SPRING HARROWS, AND THE TEETH ON A FRONTEND LOADER BUCKET. SUCH GROOVES SHALL NOT BE LESS THAN 3 INCHES DEEP NOR FURTHER THAN 15 INCHES APART.

ROUGHENING WITH TRACKED MACHINERY

ROUGHENING WITH TRACKED MACHINERY ON CLAY SOILS IS NOT RECOMMENDED UNLESS NO ALTERNATIVES ARE AVAILABLE. UNDUE COMPACTION OF SURFACE SOIL RESULTS FROM THIS PRACTICE. SANDY SOILS DO NOT COMPACT SEVERELY AND MAY BE TRACKED. IN NO CASE IS TRACKING AS EFFECTIVE AS THE OTHER ROUGHENING METHODS DESCRIBED.

TRACKING SHALL BE DONE BY OPERATING TRACKED MACHINERY UP AND DOWN THE SLOPE TO LEAVE HORIZONTAL DEPRESSIONS IN THE SOIL. AS FEW PASSES OF THE MACHINERY AS POSSIBLE SHOULD BE MADE TO MINIMIZE COMPACTION.

SEEDING

ROUGHENED AREAS SHALL BE SEEDED AND MULCHED AS SOON AS POSSIBLE TO OBTAIN OPTIMUM SEED GERMINATION AND SEEDING GROWTH. REFER TO SPECIFICATIONS DS1, DS2, DS3, AND DS4 - DISTURBED AREA STABILIZATION (WITH MULCHING ONLY, TEMPORARY SEEDING, PERMANENT VEGETATION, AND SODDING), RESPECTIVELY.

Su SURFACE ROUGHENING

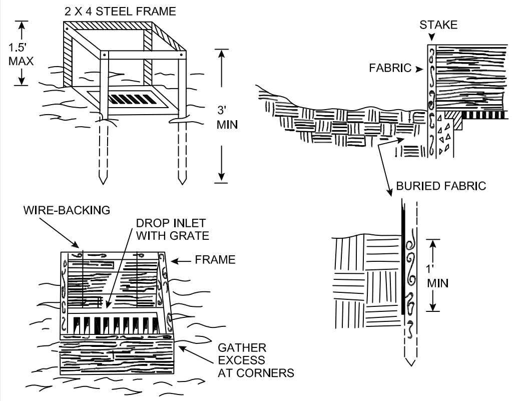

FILTER FABRIC WITH SUPPORTING FRAME

THIS METHOD OF INLET PROTECTION IS APPLICABLE WHERE THE INLET DRAINS A RELATIVELY FLAT AREA (SLOPE NO GREATER THAN 5%) AND SHALL NOT APPLY TO INLETS RECEIVING CONCENTRATED FLOWS, SUCH AS IN STREET OR HIGHWAY MEDIANS. AS SHOWN IN DETAIL, TYPE C SILT FENCE SUPPORTED BY STEEL POSTS SHALL BE USED. THE STAKES SHALL BE SPACED EVENLY AROUND THE PERIMETER OF THE INLET A MAXIMUM OF 3 FEET APART, AND SECURELY DRIVEN IN TO THE GROUND, APPROXIMATELY 18 INCHES DEEP. THE FABRIC SHALL BE ENTRENCHED 12 INCHES AND BACKFILLED WITH WITH CRUSHED STONE OR COMPACTED SOIL. FABRIC AND WIRE SHALL BE SECURELY FASTENED TO THE POSTS, AND FABRIC ENDS MUST BE OVERLAPPED A MINIMUM OF 18 INCHES OR WRAPPED TOGETHER AROUND A POST TO PROVIDE A CONTINUOUS FABRIC BARRIER AROUND THE INLET.

Sd2-F FILTER FABRIC WITH SUPPORTING FRAME

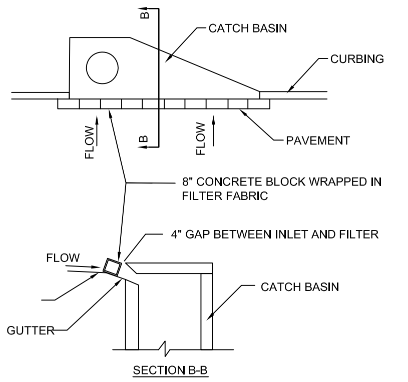
B
CATCH BASIN
CURBING
FLOW
B
FLOW
PAVEMENT
8" CONCRETE BLOCK WRAPPED IN FILTER FABRIC
4" GAP BETWEEN INLET AND FILTER
FLOW
CATCH BASIN
GUTTER
SECTION B-B

CURB INLET PROTECTION

ONCE PAVEMENT HAS BEEN INSTALLED, A CURB INLET FILTER SHALL BE INSTALLED ON INLETS RECEIVING RUNOFF FROM DISTURBED AREAS. THIS METHOD OF INLET PROTECTION SHALL BE REMOVED IF A SAFETY HAZARD IS CREATED.

ONE METHOD OF CURB INLET PROTECTION USES "PIGS-IN-A-BALNKET": 8-INCH CONCRETE BLOCKS WRAPPED IN FILTER FABRIC. SEE DETAIL. ANOTHER METHOD USES GRAVEL BAGS CONSTRUCTED BY WRAPPING DOT #57 STONE WITH FILTER FABRIC, WIRE, PLASTIC MESH, OR EQUIVALENT MATERIAL.

A GAP OF APPROXIMATELY 4 INCHES SHALL BE LEFT BETWEEN THE INLET FILTER AND THE INLET TO ALLOW FOR OVERFLOW AND PREVENT HAZARDOUS PONDING IN THE ROADWAY. PROPER INSTALLATION AND MAINTENANCE ARE CRUCIAL TO AVOID PONDING IN THE ROADWAY, RESULTING IN A HAZARDOUS CONDITION.

Sd2-P CURB INLET PROTECTION

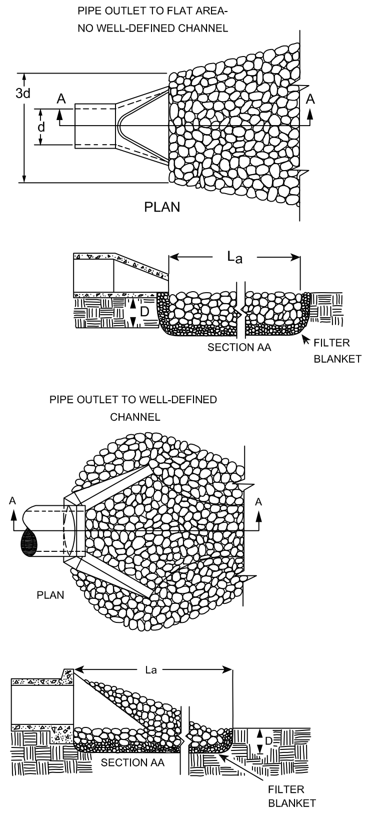
PIPE OUTLET TO FLAT AREA- NO WELL-DEFINED CHANNEL
3d
A
d
A
PLAN
La
D
SECTION AA
FILTER BLANKET
PIPE OUTLET TO WELL-DEFINED CHANNEL
A
A
PLAN
La
D
SECTION AA
FILTER BLANKET

DETAILS MODIFIED FROM VA SWCC

NOTES ON DETAILS

1. L_a IS THE LENGTH OF THE RIPRAP APRON.
2. D = 1.5 TIMES THE MAXIMUM STONE DIAMETER BUT NOT LESS THAN 6".
3. IN A WELL-DEFINED CHANNEL EXTEND THE APRON UP THE CHANNEL BANKS TO AN ELEVATION OF 6" ABOVE THE MAXIMUM TAILWATER DEPTH OF TO THE TOP OF THE BANK, WHICHEVER IS LESS.
4. A FILTER BLANKET OR FILTER FABRIC SHOULD BE INSTALLED BETWEEN THE RIPRAP AND SOIL FOUNDATION.

APRON LENGTH AND THICKNESS

THE APRON LENGTH AND d_{50}, STONE MEDIAN SIZE, SHALL BE DETERMINED FROM THE CURVES ACCORDING TO THE TAILWATER CONDITIONS:

MINIMUM TAILWATER- USE FIG. 6-24.1

MAXIMUM TAILWATER- USE FIGURE 6-24.2

MAXIMUM STONE SIZE= 1.5 x d_{50}

APRON THICKNESS= 1.5 x dmax

CONSTRUCTION SPECIFICATIONS

1. ENSURE THAT THE SUBGRADE FOR THE FILTER AND RIPRAP FOLLOWS THE REQUIRED LINES AND GRADES SHOWN IN THE PLAN. COMPACT ANY FILL REQUIRED IN THE SUBGRADE TO THE DENSITY OF THE SURROUNDING UNDISTURBED MATERIAL. LOW AREAS IN THE SUBGRADE ON UNDISTURBED SOIL MAY ALSO BE FILLED BY INCREASING THE RIPRAP THICKNESS.
2. THE RIPRAP AND GRAVEL FILTER MUST CONFORM TO THE SPECIFIED GRADING LIMITS SHOWN ON THE PLANS.
3. GEOTEXTILE MUST MEET DESIGN REQUIREMENTS AND BE PROPERLY PROTECTED FROM PUNCHING OR TEARING DURING INSTALLATION. REPAIR ANY DAMAGE BY REMOVING THE RIPRAP AND PLACING ANOTHER PIECE OF FILTER FABRIC OVER THE DAMAGED AREA. ALL CONNECTING JOINTS SHOULD OVERLAP A MINIMUM OF 1 FT. IF THE DAMAGE IS EXTENSIVE, REPLACE THE ENTIRE FILTER FABRIC.
4. RIPRAP MAY BE PLACED BY EQUIPMENT, BUT TAKE CARE TO AVOID DAMAGING THE FILTER FABRIC.
5. THE MINIMUM THICKNESS OF THE RIPRAP SHOULD BE 1.5 TIMES THE MAXIMUM STONE DIAMETER.
6. CONSTRUCT THE APRON ON ZERO GRADE WITH NO OVERFALL AT THE END. MAKE THE TOP OF THE RIPRAP AT THE DOWNSTREAM END LEVEL WITH THE RECEIVING AREA OR SLIGHTLY BELOW IT.
7. ENSURE THAT THE APRON IS PROPERLY ALIGNED WITH THE RECEIVING STREAM AND PREFERABLY STRAIGHT THROUGHOUT ITS LENGTH. IF A CURVE IS NEEDED TO FIT SITE CONDITIONS, PLACE IT IN THE UPPER SECTION OF THE APRON.
8. IMMEDIATELY AFTER CONSTRUCTION, STABILIZE ALL DISTURBED AREAS WITH VEGETATION.
9. STONE QUALITY - SELECT STONE FOR RIPRAP FROM FIELD STONE OR QUARRY STONE. THE STONE SHOULD BE HARD, ANGULAR, AND HIGHLY WEATHER-RESISTANT. THE SPECIFIC GRAVITY OF THE INDIVIDUAL STONES SHOULD BE AT LEAST 2.5.
10. FILTER - INSTALL A FILTER TO PREVENT SOIL MOVEMENT THROUGH THE OPENINGS IN THE RIPRAP. THE FILTER SHOULD CONSIST OF A GRADED GRAVEL LAYER OR A SYNTHETIC FILTER CLOTH. SEE APPENDIX C; P. C-1.

MAINTENANCE

INSPECT RIPRAP OUTLET STRUCTURES AFTER HEAVY RAINS TO SEE IF ANY EROSION AROUND OR BELOW THE RIPRAP HAS TAKEN PLACE OR IF STONES HAVE BEEN DISLODGED. IMMEDIATELY MAKE ALL NEEDED REPAIRS TO PREVENT FURTHER DAMAGE.

St STORM DRAIN OUTLET PROTECTION

㊸ St - CALCULATIONS

St #	STRUCTURE	Do (in)	Q25 (cfs)	V25 (fps)	La (ft)	W1 (ft)	W2 (ft)	d50 (ft)	DEPTH (ft)
A8	24" HDPE OUTFALL	24	11.28	7.09	18	6	20	0.50	1.0
B1	24" HDPE OUTFALL	24	30.0	9.55	18	6	20	0.50	1.0
	FLUMES				18	6	20	0.50	1.0

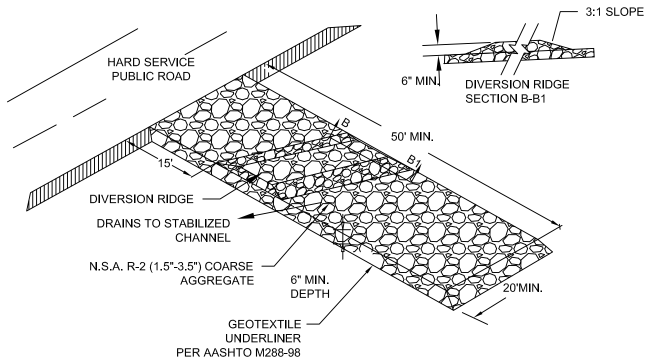
3:1 SLOPE
HARD SERVICE PUBLIC ROAD
6" MIN.
DIVERSION RIDGE SECTION B-B1
B
50' MIN.
15'
B1
DIVERSION RIDGE
DRAINS TO STABILIZED CHANNEL
N.S.A. R-2 (1.5"-3.5") COARSE AGGREGATE
6" MIN. DEPTH
20'MIN.
GEOTEXTILE UNDERLINER PER AASHTO M288-98

CONSTRUCTION EXIT

A STONE STABILIZED PAD SHALL BE LOCATED AT ANY POINT WHERE TRAFFIC WILL BE LEAVING A CONSTRUCTION SITE TO A PUBLIC RIGHT-OF-WAY, STREET, ALLEY, SIDEWALK, PARKING AREA, OR ANY OTHER AREA WHERE THERE IS A TRANSITION FROM BARE SOIL TO A PAVED AREA.

AGGREGATE SIZE

STONE WILL BE IN ACCORDANCE WITH NATIONAL STONE ASSOCIATION R-2 (1.5 TO 3.5 INCH STONE).

PAD THICKNESS

THE GRAVEL PAD SHALL HAVE A MINIMUM THICKNESS OF 6 INCHES.

PAD WIDTH

AT A MINIMUM, THE WIDTH SHOULD EQUAL FULL WIDTH OF ALL POINTS OF VEHICULAR EGRESS, BUT NOT LESS THAN 20 FEET WIDE.

DIVERSION RIDGE

ON SITES WHERE THE GRADE TOWARD THE PAVED AREA IS GREATER THAN 2%, A DIVERSION RIDGE 6 TO 8 INCHES HIGH WITH 3:1 SIDE SLOPES SHALL BE CONSTRUCTED ACROSS THE FOUNDATION APPROXIMATELY 15 FEET ABOVE THE ROAD.

MAINTENANCE

THE EXIT SHALL BE MAINTAINED IN A CONDITION WHICH WILL PREVENT TRACKING OR FLOW OF MUD ONTO PUBLIC RIGHTS-OF-WAY. THIS MAY REQUIRE PERIODIC TOP DRESSING WITH 1.5-3.5 INCH STONE, AS CONDITIONS DEMAND, AND REPAIR AND/OR CLEANOUT OF ANY STRUCTURES TO TRAP SEDIMENT. ALL MATERIALS SPILLED, DROPPED, WASHED, OR TRACKED FROM VEHICLES OR SITE ONTO ROADWAYS OR INTO STORM DRAINS MUST BE REMOVED IMMEDIATELY.

Co CONSTRUCTION EXIT

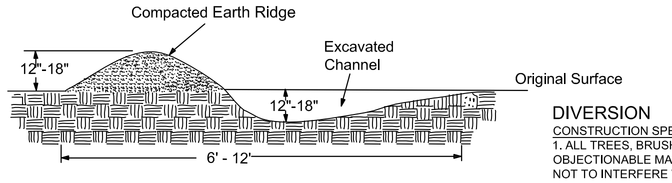

TYPICAL DIVERSION DITCH

STABLE OUTLETS SHALL BE PROVIDED FOR EACH DIVERSION.

DIVERSION

CONSTRUCTION SPECIFICATIONS

1. ALL TREES, BRUSH, STUMPS, OBSTRUCTIONS, AND OTHER OBJECTIONABLE MATERIAL SHALL BE REMOVED AND DISPOSED OF SO AS NOT TO INTERFERE WITH THE PROPER FUNCTIONING OF THE DIVERSION.
2. THE DIVERSION SHALL BE EXCAVATED OR SHAPED TO LINE, GRADE, AND CROSS SECTION AS REQUIRED TO MEET THE CRITERIA SPECIFIED HEREIN AND FREE OF IRREGULARITIES WHICH WILL IMPEDE NORMAL FLOW.
3. ALL FILLS SHALL BE MACHINE COMPACTED AS NEEDED TO PREVENT UNEQUAL SETTLEMENT THAT WOULD CAUSE DAMAGE IN THE COMPLETED DIVERSION.
4. ALL EARTH REMOVED AND NOT NEEDED IN CONSTRUCTION SHALL BE SPREAD OR DISPOSED OF SO THAT IT WILL NOT INTERFERE WITH THE FUNCTIONING OF THE DIVERSION.
5. DIVERSION CHANNEL SHALL BE STABILIZED IN ACCORDANCE WITH SPECIFICATION CH - CHANNEL STABILIZATION.

Di DIVERSION

PROJECT NO.:
14137

DATE:
04/28/15

REVISIONS:

	DATE	DESCRIPTION
1	3/25/15	CITY SUB
2	4/01/15	OUTLET REV
3	4/27/15	2ND SUB CITY
4		
5		
6		

SOUTHLAND
ENGINEERING
CIVIL ENGINEERS - LAND SURVEYORS - LAND PLANNERS
114 OLD MILL ROAD., CARTERSVILLE, GA 30120
PH: 770.387.0440 FAX: 770.607.5151

BARTOW COUNTY
FIRE STATION #9
LOCATED IN LAND LOTS 856 & 857
4TH DISTRICT, 3RD SECTION
CARTERSVILLE, GEORGIA

No. 28430
KARL P. LUTJENS

SHEET TITLE:
EROSION
CONTROL
NOTES

SHEET NO.:
C505

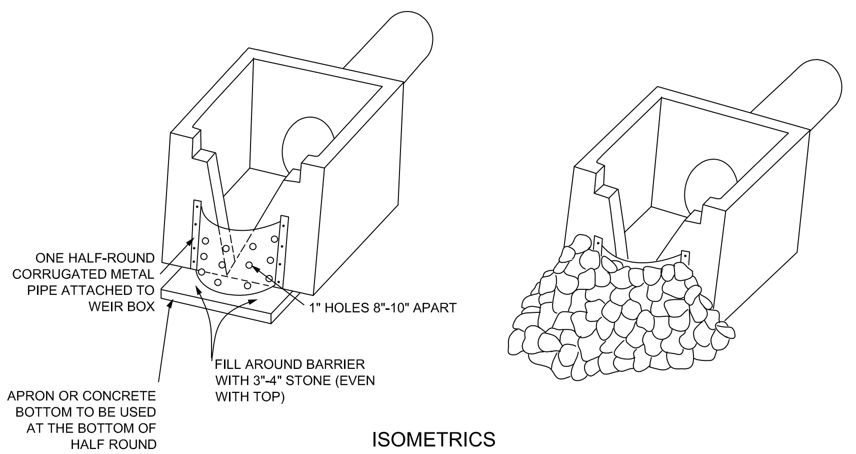
ONE HALF-ROUND CORRUGATED METAL PIPE ATTACHED TO WEIR BOX
1" HOLES 8"-10" APART
FILL AROUND BARRIER WITH 3"-4" STONE (EVEN WITH TOP)
APRON OR CONCRETE BOTTOM TO BE USED AT THE BOTTOM OF HALF ROUND

ISOMETRICS

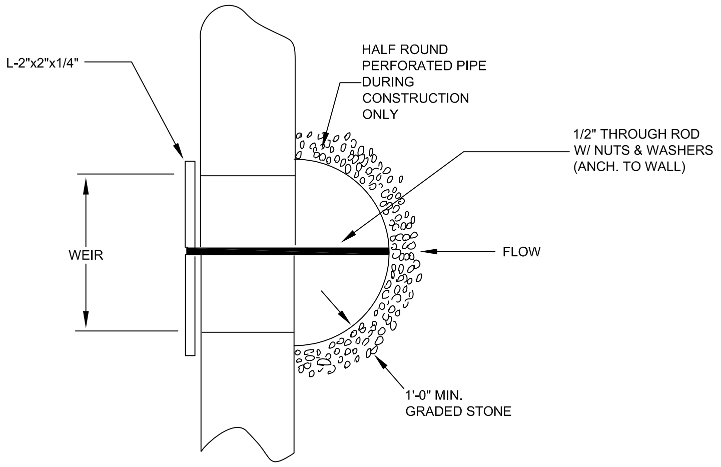
L-2"x2"x1/4"
HALF ROUND PERFORATED PIPE DURING CONSTRUCTION ONLY
1/2" THROUGH ROD W/ NUTS & WASHERS (ANCH. TO WALL)
WEIR
FLOW
1'-0" MIN. GRADED STONE

PLAN

Rt-P PERFORATED HALF ROUND PIPE WITH STONE FILTER

THE FOLLOWING TYPES OF STRUCTURES ARE ACCEPTABLE UNDER THE DESIGNATED CONDITIONS:

PERFORATED HALF-ROUND PIPE WITH STONE FILTER: Rt-P

- A. SHOULD BE USED ONLY IN DETENTION PONDS WITH LESS THAN 30 ACRE TOTAL DRAINAGE AREA.
- B. NEVER TO BE USED ON EXPOSED PIPE END OR WINGED HEADWALL.
- C. DIAMETER OF HALF-ROUND PIPE SHOULD BE 1.5 TIME THE DIAMETER OF THE PRINCIPAL PIPE OUTLET OR WIDER THAN THE GREATEST WIDTH OF THE CONCRETE WEIR.
- D. PERFORATIONS AND STONE SIZES ARE SHOWN IN DETAIL
- E. SHALL BE FIXED BY SPECIFIED MEANS (BOLTS, ETC) TO CONCRETE OUTLET STRUCTURE.

SLOTTED BOARD DAM WITH STONE: Rt-B

- A. CAN BE USED IN DETENTION PONDS WITH DRAINAGE AREAS UP TO 100 ACRES.
- B. CAN BE USED WITH OPEN END PIPE OUTLETS, WINGED HEADWALLS, OR CONCRETE WEIR OUTLETS.
- C. SHOULD BE INSTALLED WITH MINIMUM SIZE 4X4 INCH POSTS.
- D. BOARDS SHOULD HAVE 0.5-1.0 INCH SPACE BETWEEN THEM.

MAINTENANCE

RETROFIT STRUCTURES SHALL BE KEPT CLEAR OF TRASH AND DEBRIS. THIS WILL REQUIRE CONTINUOUS MONITORING AND MAINTENANCE, WHICH INCLUDES SEDIMENT REMOVAL WHEN ONE THIRD OF THE SEDIMENT STORAGE CAPACITY HAS BEEN LOST. STRUCTURES ARE TEMPORARY AND SHALL BE REMOVED WHEN DISTURBED AREAS HAVE BEEN PERMANENTLY STABILIZED.

RETROFIT CALCULATION

STORAGE CALCULATIONS
1. REQUIRED STORMWATER STORAGE = 2400 CY
(AS DETERMINED BY LOCAL ORDINANCE)
2. REQUIRED SEDIMENT STORAGE = 315 CY
(67 CY/AC * 4.7 AC DISTURBED AREA)
3. TOTAL REQUIRED STORAGE = 2400 + 315 = 2715 CY
4. AVAILABLE STORAGE = 5442 CY
5. IS THE AVAILABLE STORAGE (4) GREATER THAN THE TOTAL REQUIRED STORAGE (3)?
X YES NO
6. IF “NO”, THE SEDIMENT STORAGE CAPACITY OF THE POND MUST BE INCREASED. CHOOSE THE METHOD TO BE USED:
______ RAISE THE INVERT OF THE OUTLET STRUCTURE ______ INCHES
______ UNDERCUT THE POND ______ FEET
______ OTHER ________________________________
7. CLEAN-OUT ELEVATION = 700.20 FT
(ELEVATION CORRESPONDING TO 22 CY/AC * 4.7 AC DISTURBED AREA)
8. IS THE LENGTH-WIDTH RATIO 2:1 OR GREATER?
YES X NO
9. IF “NO”, THE LENGTH OF FLOW MUST BE INCREASED. CHOOSE THE METHOD TO BE USED:
X BAFFLES (TYPE OF BAFFLE: BOARD)
______ OTHER ________________________________
NOTE THE CMP DIAMETER AND HEIGHT IF A HALF-ROUND CMP RETROFIT IS TO BE USED.
DIAMETER = 12 INCHES HEIGHT = 6 FEET

Rt-P RETROFIT

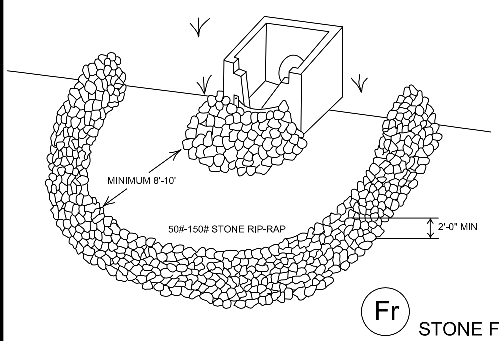
MINIMUM 8'-10'
50#-150# STONE RIP-RAP
2'-0" MIN

FILTER RING

FILTER RINGS SHOULD BE USED IN CONJUNCTION WITH OTHER SEDIMENT CONTROL MEASURES TO PROVIDE ADDITIONAL SEDIMENT FILTERING CAPACITY.
FILTER RINGS SHOULD BE CONSTRUCTED OF STONE NO SMALLER THAN 3"-5" WHEN USED AT INLETS LESS THAN 12" IN DIAMETER, AND OF STONE NO LESS THAN 10"-15" WHEN USED AT LARGER INLETS.

MAINTENANCE

THE FILTER RING MUST BE KEPT CLEAR OF TRASH AND DEBRIS.
THIS WILL REQUIRE CONTINUOUS MONITORING AND MAINTENANCE,
WHICH INCLUDES SEDIMENT REMOVAL WHEN ONE-HALF
FULL. STRUCTURES ARE TEMPORARY AND SHOULD BE REMOVED
WHEN THE LAND-DISTURBING PROJECT HAS BEEN STABILIZED.

Fr STONE FILTER RING

SEDIMENT BASIN BAFFLES

EXAMPLES: PLAN VIEWS (NOT TO SCALE)

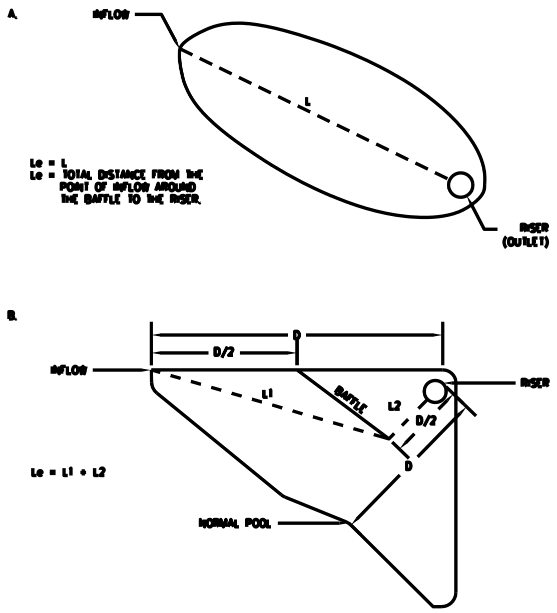
A.
INFLOW
L
Le = L
Le = TOTAL DISTANCE FROM THE POINT OF INFLOW AROUND THE BAFFLE TO THE RISER.
RISER (OUTLET)
B.
D
D/2
INFLOW
L1
BAFFLE
L2
D/2
D
RISER
Le = L1 + L2
NORMAL POOL

SEDIMENT BASIN BAFFLES CONT'D

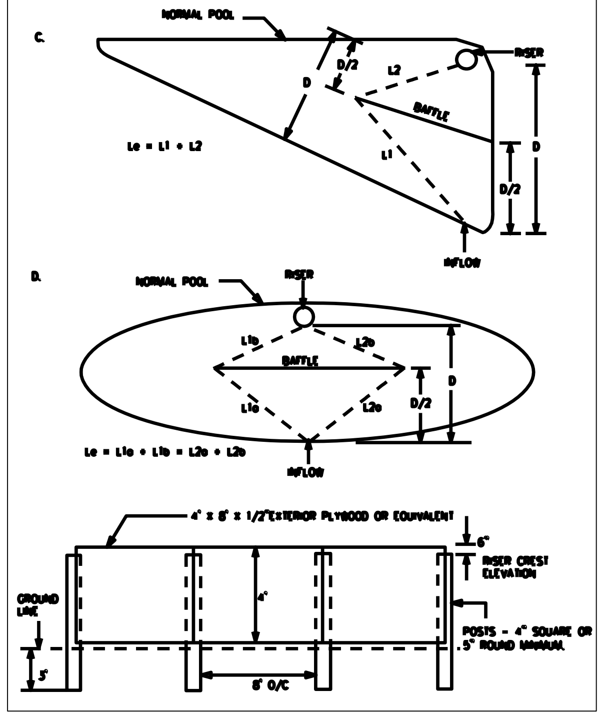
C.
NORMAL POOL
D/2
L2
RISER
D
BAFFLE
Le = L1 + L2
L1
D
D/2
INFLOW
D.
NORMAL POOL
RISER
L1b
L2b
BAFFLE
D
L1a
L2a
D/2
Le = L1a + L1b = L2a + L2b
INFLOW
4' x 8' x 1/2" EXTERIOR PLYWOOD OR EQUIVALENT
6"
RISER CREST ELEVATION
GROUND LINE
4'
POSTS - 4" SQUARE OR 5" ROUND MINIMUM
5'
8' O/C

24 HOUR CONTACT
CRAIG MILSAP
770-387-5151

811
Know what's below.
Call before you dig.

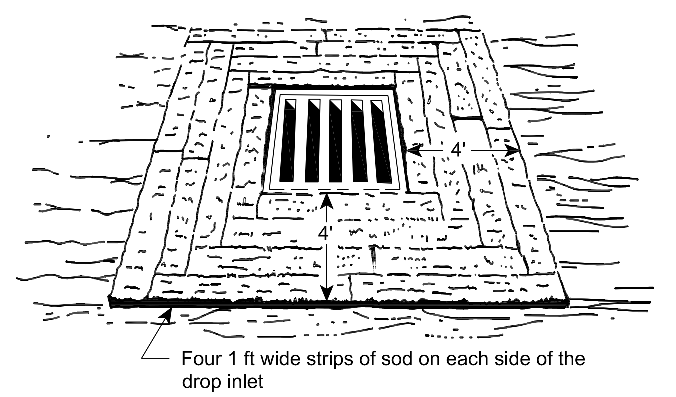

Four 1 ft wide strips of sod on each side of the drop inlet

Figure 6-21.6 - Sod Strips Protect Inlet Area From Erosion (source: Va SWCC)

CONCRETE TRUCK WASHDOWN

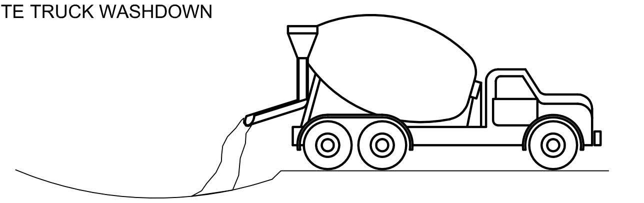

DESIGNATE WASHDOWN AREA AND EXCAVATE PIT LARGE ENOUGH TO CONTAIN WASHDOWN WATER. THIS MUST BE AWAY FROM STORM DRAINS AND WATERWAYS.

ADVISE CONCRETE TRUCK DRIVERS OF THE DESIGNATED WASH-OUT AREAS BEFORE THEY START THE JOB.

WASHDOWN CHUTE, HOPPER, AND REAR OF VEHICLE ONLY. DO NOT WASH OUT DRUM

ENSURE THAT ALL WASHDOWN WATER STAYS IN PIT.

DISPOSE OF SETTLED, HARDENED CONCRETE IN GARBAGE WITH OTHER CONSTRUCTION DEBRIS.

NEVER DISPOSE OF WASHDOWN WATER IN STREETS, STORM DRAINS, OR STREAMS.

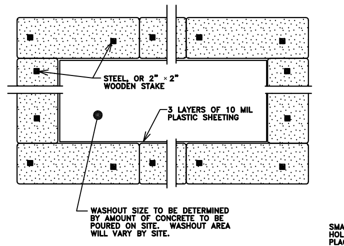
STEEL, OR 2" × 2" WOODEN STAKE
3 LAYERS OF 10 MIL PLASTIC SHEETING
WASHOUT SIZE TO BE DETERMINED BY AMOUNT OF CONCRETE TO BE POURED ON SITE. WASHOUT AREA WILL VARY BY SITE.

PLAN

1. CONCRETE WASHOUT FACILITY SHALL NOT BE PLACED WITHIN 50' OF STORM DRAINS, OPEN DITCHES OR WATER BODIES.
2. CONCRETE WASHOUT FACILITY SHALL BE PLACED IN AN AREA AS TO NOT INTERFERE WITH OTHER CONSTRUCTION ACTIVITY.
3. THE NUMBER OF WASHOUT AREAS IS DEPENDENT OF THE AMOUNT OF CONCRETE TO BE POURED ONSITE.
4. CONCRETE WASHOUT FACILITIES SHALL BE INSPECTED ON A DAILY BASIS TO ENSURE THAT NO LEAKS HAVE OCCURRED. INSPECT PLASTIC LINER AND SIDEWALLS TO ENSURE NO DAMAGE HAS OCCURRED. REPAIR AS NEEDED.
5. WASHOUT FACILITY SHALL BE CLEANED OUT WHEN IT HAS REACHED A 75% CAPACITY.
6. PLACE SIGN THAT READS "CONCRETE WASHOUT FACILITY" IN AN AREA THAT IS EASILY SEEN.

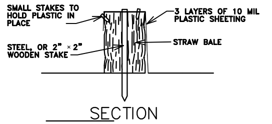
SMALL STAKES TO HOLD PLASTIC IN PLACE
STEEL, OR 2" × 2" WOODEN STAKE
3 LAYERS OF 10 MIL PLASTIC SHEETING
STRAW BALE

SECTION

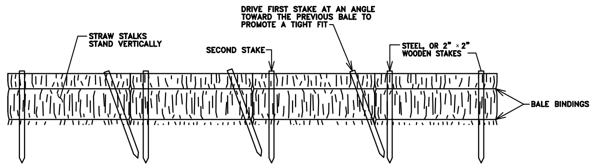
DRIVE FIRST STAKE AT AN ANGLE TOWARD THE PREVIOUS BALE TO PROMOTE A TIGHT FIT
STRAW STALKS STAND VERTICALLY
SECOND STAKE
STEEL, OR 2" × 2" WOODEN STAKES
BALE BINDINGS

ELEVATION

DESIGNATE WASHDOWN AREA AND EXCAVATE PIT LARGE ENOUGH TO CONTAIN WASHDOWN WATER. THIS MUST BE AWAY FROM STORM DRAINS AND WATERWAYS.

ADVISE CONCRETE TRUCK DRIVERS OF THE DESIGNATED WASH-OUT AREAS BEFORE THEY START THE JOB.

WASHDOWN CHUTE, HOPPER, AND REAR OF VEHICLE ONLY. DO NOT WASH OUT DRUM

ENSURE THAT ALL WASHDOWN WATER STAYS IN PIT.

DISPOSE OF SETTLED, HARDENED CONCRETE IN GARBAGE WITH OTHER CONSTRUCTION DEBRIS.

NEVER DISPOSE OF WASHDOWN WATER IN STREETS, STORM DRAINS, OR STREAMS.

CONCRETE WASHOUT

N.T.S.

PROJECT NO.: 14137

DATE: 04/28/15

REVISIONS:

	DATE	DESCRIPTION
1	3/25/15	CITY SUB
2	4/01/15	OUTLET REV
3	4/27/15	2ND SUB CITY
4		
5		
6		

SOUTHLAND
ENGINEERING
CIVIL ENGINEERS - LAND SURVEYORS - LAND PLANNERS
114 OLD MILL ROAD., CARTERSVILLE, GA 30120 PH: 770.387.0440 FAX: 770.607.5151

BARTOW COUNTY
FIRE STATION #9
LOCATED IN LAND LOTS 856 & 857
4TH DISTRICT, 3RD SECTION
CARTERSVILLE, GEORGIA

No. 28430
KARL P. LUTJENS

SHEET TITLE:
EROSION CONTROL DETAILS

SHEET NO.:
C506

DEFINITION

APPLYING PLANT RESIDUES OR OTHER SUITABLE MATERIALS, PRODUCED ON THE SITE IF POSSIBLE, TO THE SOIL SURFACE.

CONDITIONS

MULCH OR TEMPORARY GRASSING SHALL BE APPLIED TO ALL EXPOSED AREAS WITHIN 14 DAYS OF DISTURBANCE. MULCH CAN BE USED AS A SINGULAR EROSION CONTROL DEVICE FOR UP TO SIX MONTHS, BUT IT SHALL BE APPLIED AT THE APPROPRIATE DEPTH, DEPENDING ON THE MATERIAL USED, ANCHORED, AND HAVE A CONTINUOUS 90% COVER OR GREATER OF THE SOIL SURFACE. MAINTENANCE SHALL BE REQUIRED TO MAINTAIN APPROPRIATE DEPTH AND 90 % COVER. TEMPORARY VEGETATION MAY BE EMPLOYED INSTEAD OF MULCH IF THE AREA WILL REMAIN UNDISTURBED FOR LESS THAN SIX MONTHS. IF AN AREA WILL REMAIN UNDISTURBED FOR GREATER THAN SIX MONTHS, PERMANENT VEGETATIVE TECHNIQUES SHALL BE EMPLOYED.

SPECIFICATIONS

MULCHING WITHOUT SEEDING
THIS STANDARD APPLIED TO GRADES OR CLEARED AREAS WHERE SEEDINGS MAY NOT HAVE A SUITABLE GROWING SEASON TO PRODUCE AN EROSION RETARDANT COVER, BUT CAN BE STABILIZED WITH A MULCH COVER.

SITE PREPARATION
1. GRADE TO PERMIT THE USE OF EQUIPMENT FOR APPLYING AND ANCHORING MULCH.
2. INSTALL NEEDED EROSION CONTROL MEASURES AS REQUIRED SUCH AS DIKES, DIVERSIONS, BERMS, TERRACES AND SEDIMENT BARRIERS.
3. LOOSEN COMPACT SOIL TO A MINIMUM DEPTH OF 3 INCHES.

MULCHING MATERIALS
SELECT ONE OF THE FOLLOWING MATERIALS AND APPLYING AT THE DEPTH INDICATED:
1. DRY STRAW OR HAY SHALL BE APPLIED AT A DEPTH OF 2 TO 4 INCHES PROVIDING COMPLETE SOIL COVERAGE. ONE ADVANTAGE OF THIS MATERIAL IS EASY APPLICATION.
2. WOOD WASTE (CHIPS, SAWDUST OR BARK) SHALL BE APPLIED AT A DEPTH OF 2 TO 3 INCHES. ORGANIC MATERIAL FROM THE CLEARING STAGE OF DEVELOPMENT SHOULD REMAIN ON SITE, BE CHIPPED, AND APPLIED AS MULCH. THIS METHOD OF MULCHING CAN GREATLY REDUCE EROSION CONTROL COSTS.
3. CUTBACK ASPHALT (SLOW CURING) SHALL BE APPLIED AT 1200 GALLONS PER ACRE (OR 1/4 GALLON PER SQ.YD.).
4. POLYETHYLENE FILM SHALL BE SECURED OVER BANKS OF STOCKPILED SOIL MATERIAL FOR TEMPORARY PROTECTION. THIS MATERIAL CAN BE SALVAGED AND REUSED.

APPLYING MULCH
WHEN MULCH IS USED WITHOUT SEEDING, MULCH SHALL BE APPLIED TO PROVIDE FULL COVERAGE OF THE EXPOSED AREA.
1. DRY STRAW OR HAY MULCH AND WOOD CHIPS SHALL BE APPLIED UNIFORMLY BY HAND OR BY MECHANICAL EQUIPMENT.
2. IF THE AREA WILL EVENTUALLY BE COVERED WITH PERENNIAL VEGETATION, 20-30 POUNDS OF NITROGEN PER ACRE IN ADDITION TO THE NORMAL AMOUNT SHALL BE APPLIED TO OFFSET THE UPTAKE OF NITROGEN CAUSED BY THE DECOMPOSITION OF THE ORGANIC MULCHES.
3. CUTBACK ASPHALT SHALL BE APPLIED UNIFORMLY. CARE SHOULD BE TAKEN IN AREAS OF PEDESTRIAN TRAFFIC DUE TO PROBLEMS OF "TRACKING IN" OR DAMAGE TO SHOES, CLOTHES, ETC.
4. APPLY POLYETHYLENE FILM ON EXPOSED AREAS.

ANCHORING MULCH
1. STRAW OR HAY MULCH CAN BE PRESSED INTO THE SOIL WITH A DISK HARROW WITH THE DISK SET STRAIGHT OR WITH A SPECIAL "PACKER DISK." DISKS MAY BE SMOOTH OR SERRATED AND SHOULD BE 20 INCHES OR MORE IN DIAMETER AND 8 TO 12 INCHES APART. THE EDGES OF THE DISK SHOULD BE DULL ENOUGH NOT TO CUT THE MULCH BUT TO PRESS IT INTO THE SOIL LEAVING MUCH OF IT IN AN ERECT POSITION. STRAW OR HAY MULCH SHALL BE ANCHORED IMMEDIATELY AFTER APPLICATION. STRAW OR HAY MULCH SPREAD WITH SPECIAL BLOWER-TYPE EQUIPMENT MAY BE ANCHORED WITH EMULSIFIED ASPHALT (GRADE AE-5 OR SS-1). THE ASPHALT EMULSION SHALL BE SPRAYED ONTO THE MULCH AS IT IS EJECTED FROM THE MACHINE. USE 100 GALLONS OF EMULSIFIED ASPHALT AND 100 GALLONS OF WATER PER TON OF MULCH. TACKIFERS AND BINDERS CAN BE SUBSTITUTED FOR EMULSIFIED ASPHALT. PLEASE REFER TO SPECIFICATION TB-TACKIFERS AND BINDERS. PLASTIC MESH OR NETTING WITH MESH NO LARGER THAN ONE INCH BY ONE INCH SHALL BE INSTALLED ACCORDING TO MANUFACTURER'S SPECIFICATIONS.
2. NETTING OF THE APPROPRIATE SIZE SHALL BE USED TO ANCHOR WOOD WASTE. OPENINGS OF THE NETTING SHALL NOT BE LARGER THAN THE AVERAGE SIZE OF THE WOOD WASTE CHIPS.
3. POLYETHYLENE FILM SHALL BE ANCHOR TRENCHED AT THE TOP AS WELL AS INCREMENTALLY AS NECESSARY.

Ds1 DISTURBED AREA STABILIZATION WITH MULCHING

DEFINITION

THE ESTABLISHMENT OF TEMPORARY VEGETATIVE COVER WITH FAST GROWING SEEDINGS FOR SEASONAL PROTECTION ON DISTURBED OR DENUDED AREA.

CONDITIONS

TEMPORARY GRASSING, INSTEAD OF MULCH, CAN BE APPLIED TO ROUGH GRADED AREAS THAT WILL BE EXPOSED FOR LESS THAN SIX MONTHS. TEMPORARY VEGETATIVE MEASURES SHOULD BE COORDINATED WITH PERMANENT MEASURES TO ASSURE ECONOMICAL AND EFFECTIVE STABILIZATION. MOST TYPES OF TEMPORARY VEGETATION ARE IDEAL TO USE AS COMPANION CROPS UNTIL THE PERMANENT VEGETATION IS ESTABLISHED.

SEEDING RATES FOR TEMPORARY SEEDING

SPECIES	RATE PER 1,000 SQ.FT.	RATE PER ACRE *	PLANTING DATES **
RYE	3.9 POUNDS	3 BU.	9/1-3/1
RYEGRASS	0.9 POUND	40 LBS.	8/15-4/1
ANNUAL LESPEDEZA	0.9 POUND	40 LBS.	1/15-3/15
WEEPING LOVEGRASS	0.1 POUND	4 LBS.	2/15-6/15
SUNDANGRASS	1.4 POUNDS	60 LBS.	3/1-8/1
BROWNTOP MILLET	0.9 POUND	40 LBS.	4/1-7/15
WHEAT	4.1 POUNDS	3 BU.	9/15-2/1

*UNUSUAL SITE CONDITIONS MAY REQUIRE HEAVIER SEEDING RATES
**SEEDING DATES MAY NEED TO BE ALTERED TO FIT TEMPERATURE VARIATIONS AND CONDITIONS

SPECIFICATIONS

GRADING AND SHAPING

EXCESSIVE WATER RUN-OFF SHALL BE REDUCED BY PROPERLY DESIGNED AND INSTALLED EROSION CONTROL PRACTICES SUCH AS CLOSED DRAINS, DITCHES, DIKES, DIVERSIONS, SEDIMENT BARRIERS AND OTHERS.

NO SHAPING OR GRADING IS REQUIRED IF SLOPES CAN BE STABILIZED BY HAND-SEEDED VEGETATION OR IF HYDRAULIC SEEDING EQUIPMENT IS TO BE USED.

SEEDBED PREPARATION

WHEN A HYDRAULIC SEEDER IS USED, SEEDBED PREPARATION IS NOT REQUIRED. WHEN USING CONVENTIONAL OR HANDSEEDING, SEEDBED PREPARATION IS NOT REQUIRED IF THE SOIL MATERIAL IS LOOSE AND NOT SEALED BY RAINFALL.

WHEN SOIL HAS BEEN SEALED BY RAINFALL OR CONSISTS OF SMOOTH CUT SLOPES, THE SOIL SHALL BE PITTED, TRENCHED OR OTHERWISE SCARIFIED TO PROVIDE A PLACE FOR SEED TO LODGE AND GERMINATE.

LIME AND FERTILIZER

AGRICULTURAL LIME IS REQUIRED UNLESS SOIL TESTS INDICATE OTHERWISE. APPLY AGRICULTURAL LIME AT A RATE OF ONE TON PER ACRE. GRADED AREAS REQUIRE LIME APPLICATION. SOILS CAN BE TESTED TO DETERMINE IF FERTILIZER IS NEEDED. ON REASONABLY FERTILE SOILS OR SOIL MATERIAL, FERTILIZER IS NOT REQUIRED. FOR SOILS WITH VERY LOW FERTILITY, 500 TO 700 POUNDS OF 10-10-10 FERTILIZER OF THE EQUIVALENT PER ACRE (12-16 LBS./1,000 SQ.FT.) SHALL BE APPLIED. FERTILIZER SHOULD BE APPLIED BEFORE LAND PREPARATION AND INCORPORATED WITH A DISK, RIPPER OR CHISEL.

SEEDING

SELECT A GRASS OR GRASS-LEGUME MIXTURE SUITABLE TO THE AREA AND SEASON OF THE YEAR. SEED SHALL BE APPLIED UNIFORMLY BY HAND, CYCLONE SEEDER, DRILL, CULTIPACKER SEEDER, OR HYDRAULIC SEEDER (SLURRY INCLUDING SEED AND FERTILIZER). DRILL OR CULTIPACKER SEEDERS SHOULD NORMALLY PLACE SEED ONE-QUARTER TO ONE-HALF INCH DEEP. APPROPRIATE DEPTH OF PLANTING IS TEN TIMES THE SEED DIAMETER. SOIL SHOULD BE "RAKED" LIGHTLY TO COVER SEED WITH SOIL IF SEEDED BY HAND.

MULCHING

TEMPORARY VEGETATION CAN, IN MOST CASES, IN ESTABLISHED WITHOUT THE USE OF MULCH. MULCH WITHOUT SEEDING SHOULD BE CONSIDERED FOR SHORT TERM PROTECTION. REFER TO DS1 - DISTURBED AREA STABILIZATION (WITHOUT MULCHING ONLY).

IRRIGATION

DURING TIMES OF DROUGHT, WATER SHALL BE APPLIED AT A RATE NOT CAUSING RUNOFF AND EROSION. THE SOIL SHALL BE THOROUGHLY WETTED TO A DEPTH THAT WILL INSURE GERMINATION OF THE SEED. SUBSEQUENT APPLICATIONS SHOULD BE MADE WHEN NEEDED.

Ds2 DISTURBED AREA STABILIZATION WITH TEMPORARY SEEDING

DEFINITION

THE PLANTING OF PERENNIAL VEGETATION SUCH AS TREES, SHRUBS, VINES, GRASSES, OR LEGUMES ON EXPOSED AREAS FOR FINAL PERMANENT STABILIZATION. PERMANENT PERENNIAL VEGETATION SHALL BE USED TO ACHIEVE FINAL STABILIZATION.

CONDITIONS

PERMANENT PERENNIAL VEGETATION IS USED TO PROVIDE A PROTECTIVE COVER FOR EXPOSED AREAS INCLUDING CUTS, FILLS, DAMS, AND OTHER DENUDED AREAS.

SPECIFICATIONS

GRADING AND SHAPING

GRADING AND SHAPING MAY NOT BE REQUIRED WHERE HYDRAULIC SEEDING AND FERTILIZER EQUIPMENT IS TO BE USED. VERTICAL BANKS SHALL BE SLOPED TO ENABLE PLANT ESTABLISHMENT.

WHEN CONVENTIONAL SEEDING AND FERTILIZING ARE TO BE DONE GRADE AND SHAPE WHERE FEASIBLE AND PRACTICAL, SO THAT EQUIPMENT CAN BE USED SAFELY AND EFFICIENTLY DURING SEEDBED PREPARATION, SEEDING, MULCHING AND MAINTENANCE OF THE VEGETATION.

CONCENTRATIONS OF WATER THAT WILL CAUSE EXCESSIVE SOIL EROSION SHALL BE DIVERTED TO A SAFE OUTLET. DIVERSIONS AND OTHER TREATMENT PRACTICES SHALL CONFORM WITH THE APPROPRIATE STANDARDS AND SPECIFICATIONS.

SEEDBED PREPARATION

SEEDBED PREPARATION MAY NOT BE REQUIRED WHERE HYDRAULIC SEEDING AND FERTILIZING EQUIPMENT IS TO BE USED. WHEN CONVENTIONAL SEEDING IS TO BE USED, SEEDBED PREPARATION WILL BE DONE AS FOLLOWS:

BROADCAST PLANTINGS

1.TILLAGE AT A MINIMUM, SHALL ADEQUATELY LOOSEN THE SOIL TO A DEPTH OF 4 TO 6 INCHES; ALLEVIATE COMPACTION; INCORPORATE LIME AND FERTILIZER; SMOOTH AND FIRM THE SOIL; ALLOW FOR THE PROPER PLACEMENT OF SEED, SPRIGS, OR PLANTS; AND ALLOW FOR THE ANCHORING OF STRAW OR HAY MULCH IF A DISK IS TO BE USED.
2.TILLAGE MAY BE DONE WITH ANY SUITABLE EQUIPMENT.
3.TILLAGE SHOULD BE DONE ON THE CONTOUR WHERE FEASIBLE.
4.ON SLOPES TOO STEEP FOR THE SAFE OPERATION OF TILLAGE EQUIPMENT, THE SOIL SURFACE SHALL BE PITTED OR TRENCHED ACROSS THE SLOPE WITH APPROPRIATE HAND TOOLS TO PROVIDE TWO PLACES 6 TO 8 INCHES APART IN WHICH SEED MAY LODGE AND GERMINATE. HYDRAULIC SEEDING MAY ALSO BE USED.

INDIVIDUAL PLANTS

1.WHERE INDIVIDUAL PLANTS ARE TO BE SET, THE SOIL SHALL BE PREPARED BY EXCAVATING HOLES, OPENING FURROWS, OR DIBBLE PLANTING.
2.FOR NURSERY STOCK PLANTS, HOLES SHALL BE LARGE ENOUGH TO ACCOMMODATE ROOTS WITHOUT CROWDING.
3.WHERE PINE SEEDLINGS ARE TO BE PLANTED, SUBSOIL UNDER THE ROW 36 INCHES DEEP ON THE CONTOUR FOUR TO SIX MONTHS PRIOR TO PLANTING. SUBSOILING SHOULD BE DONE WHEN THE SOIL IS DRY, PREFERABLY IN AUGUST OR SEPTEMBER.

PLANTING

HYDRAULIC SEEDING

MIX THE SEED (INOCULATED IF NEEDED), FERTILIZER, AND WOOD CELLULOSE OR WOOD PULP FIBER MULCH WITH WATER AND APPLY IN A SLURRY UNIFORMLY OVER THE AREA TO BE TREATED. APPLY WITHIN ONE HOUR AFTER THE MIXTURE IS MADE.

CONVENTIONAL SEEDING

SEEDING WILL BE DONE ON A FRESHLY PREPARED AND FIRMED SEEDBED. FOR BROADCAST PLANTING, USE A CULTIPACKER SEEDER, DRILL, ROTARY SEEDER, OTHER MECHANICAL SEEDER, OR HAND SEEDING TO DISTRIBUTE THE SEED UNIFORMLY OVER THE AREA TO BE TREATED. COVER THE SEED LIGHTLY WITH 1/8 TO 1/4 INCH OF SOIL FOR SMALL SEED AND 1/2 TO 1 INCH FOR LARGE SEED WHEN USING A CULTIPACKER OR OTHER SUITABLE EQUIPMENT.

NO-TILL SEEDING

NO-TILL SEEDING IS A PERMISSIBLE INTO ANNUAL COVER CROPS WHEN PLANTING IS DONE FOLLOWING MATURITY OF THE COVER CROP OR IF THE TEMPORARY COVER STAND IS SPARSE ENOUGH TO ALLOW ADEQUATE GROWTH OF THE PERMANENT (PERENNIAL) SPECIES. NO-TILL SEEDING SHALL BE DONE WITH APPROPRIATE NO-TILL SEEDING EQUIPMENT. THE SEED MUST BE UNIFORMLY DISTRIBUTED AND PLANTED AT THE PROPER DEPTH.

INDIVIDUAL PLANTS

SHRUBS, VINES AND SPRIGS MAY BE PLANTED WITH APPROPRIATE PLANTERS OR HAND TOOLS. PINE TREES SHALL BE PLANTED MANUALLY IN THE SUBSOIL FURROW. EACH PLANT SHALL BE SET IN A MANNER THAT WILL AVOID CROWDING THE ROOTS. NURSERY STOCK PLANTS SHALL BE PLANTED AT THE SAME DEPTH OR SLIGHTLY DEEPER THAN THEY GREW AT THE NURSERY. THE TIPS OF VINES AND SPRIGS MUST BE AT OR SLIGHTLY ABOVE THE GROUND SURFACE. WHERE INDIVIDUAL HOLES ARE DUG, FERTILIZER SHALL BE PLACED IN THE BOTTOM OF THE HOLE, TWO INCHES OF SOIL SHALL BE ADDED AND THE PLANT SHALL BE SET IN THE HOLE.

MULCHING

MULCH IS REQUIRED FOR ALL PERMANENT VEGETATION APPLICATIONS. MULCH APPLIED TO SEEDED AREAS SHALL ACHIEVE 75% SOIL COVER. SELECT THE MULCHING MATERIAL FROM THE FOLLOWING AND APPLY AS INDICATED:

1. DRY STRAW OR DRY HAY OF GOOD QUALITY AND FREE OF WEED SEEDS CAN BE USED. DRY STRAW SHALL BE APPLIED AT THE RATE OF 2 TONS PER ACRE. DRY HAY SHALL BE APPLIED AT A RATE OF 2 1/2 TONS PER ACRE.
2. WOOD CELLULOSE MULCH OR WOOD PULP FIBER SHALL BE USED WITH HYDRAULIC SEEDING. IT SHALL BE APPLIED AT THE RATE OF 500 POUNDS PER ACRE. DRYSTRAW OR DRY HAY SHALL BE APPLIED (AT THE RATE INDICATED ABOVE) AFTER HYDRAULIC SEEDING.
3. ONE THOUSAND POUNDS OF WOOD CELLULOSE OR WOOD PULP FIBER, WHICH INCLUDES A TACKIFIER, SHALL BE USED WITH HYDRAULIC SEEDING ON SLOES OF 3/4 : 1 OR STEEPER.
4. SERICEA LESPEDEZA HAY CONTAINING MATURE SEED SHALL BE APPLIED AT A RATE OF THREE TONS PER ACRE.
5. PINE STRAW OR PINE BARK SHALL BE APPLIED AT A THICKNESS OF 3 INCHES FOR BEDDING PURPOSES. OTHER SUITABLE MATERIALS IN SUFFICIENT QUANTITY MAY BE USED WHERE ORNAMENTALS OR OTHER GROUND COVERS ARE PLANTED. THIS IS NOT APPROPRIATE FOR SEEDED AREAS.
6. WHEN USING TEMPORARY EROSION CONTROL BLANKETS OR BLOCK SOD, MULCH IS NOT REQUIRED.
7. BITUMINOUS TREATED ROVING MAY BE APPLIED ON PLANTED AREAS ON SLOPES, IN DITCHES OR DRY WATERWAYS TO PREVENT EROSION. BITUMINOUS TREATED ROVING SHALL BE APPLIED WITHIN 24 HOURS AFTER AN AREA HAS BEEN PLANTED. APPLICATION RATES AND MATERIALS MUST MEET GEORGIA DEPARTMENT OF TRANSPORTATION SPECIFICATIONS.

WOOD CELLULOSE AND WOOD PULP FIBERS SHALL NOT CONTAIN GERMINATION OR GROWTH INHIBITING FACTORS. THEY SHALL BE EVENLY DISPERSED WHEN AGITATED IN WATER. THE FIBERS SHALL CONTAIN A DYE TO ALLOW VISUAL METERING AND AID IN UNIFORM APPLICATION DURING SEEDING.

APPLY MULCH

STRAW OR HAY MULCH WILL BE SPREAD UNIFORMLY WITHIN 24 HOURS AFTER SEEDING AND/OR PLANTING. THE MULCH MAY BE SPREAD BY BLOWER-TYPE SPREADING EQUIPMENT, OTHER SPREADING EQUIPMENT OR BY HAND. MULCH SHALL BE APPLIED TO COVER 75% OF THE SOIL SURFACE.

WOOD CELLULOSE OR WOOD FIBER MULCH SHALL BE APPLIED UNIFORMLY WITH HYDRAULIC SEEDING EQUIPMENT.

ANCHORING MULCH

ANCHOR STRAW OR HAY MULCH IMMEDIATELY AFTER APPLICATION BY ONE OF THE FOLLOWING METHODS:
1.EMULSIFIED ASPHALT CAN BE (A) SPRAYED UNIFORMLY ONTO THE MULCH AS IT IS EJECTED FROM THE BLOWER MACHINE OR (B) SPRAYED ON THE MUCH IMMEDIATELY FOLLOWING MULCH APPLICATION WHEN STRAW OR HAY IS SPREAD BY METHODS OTHER THAN SPECIAL BLOWER EQUIPMENT.
THE EQUIPMENT OF ASPHALT EMULSION AND WATER SHALL CONSIST OF A HOMOGENEOUS MIXTURE SATISFACTORY FOR SPRAYING. THE MIXTURE SHALL CONSIST OF 100 GALLONS OF GRADE SS-1H OR CSS-1H EMULSIFIED ASPHALT AND 100 GALLONS OF WATER PER TON OF MULCH.
CARE SHALL BE TAKEN AT ALL TIMES TO PROTECT STATE WATER, THE PUBLIC, ADJACENT PROPERTY, PAVEMENTS, CURBS, SIDEWALKS, AND ALL OTHER STRUCTURES FROM ASPHALT DISCOLORATION.
2. HAY AND STRAW MULCH SHALL BE PRESSED INTO THE SOIL IMMEDIATELY AFTER THE MULCH IS SPREAD. A SPECIAL "PACKER DISK" OR DISK HARROW WITH THE DISKS SET STRAIGHT MAYBE USED. THE DISKS MAYBE SMOOTH OR SERRATED AND SHOULD BE 20 INCHES OR MORE IN DIAMETER AND 8 TO 12 INCHES APART. THE EDGES OF THE DISKS SHALL BE DULL ENOUGH TO PRESS THE MULCH INTO THE GROUND WITHOUT CUTTING IT, LEAVING MUCH OF IT IN AN ERECT POSITION. MULCH SHALL NOT BE PLOWED INTO THE SOIL.
3. SYNTHETIC TACKIFIERS OR BINDERS APPROVED BY GDOT SHALL BE APPLIED IN CONJUNCTION WITH OR IMMEDIATELY AFTER THE MULCH IS PREAD. SYNTHETIC TACKIFIERS SHALL BE MIXED AND APPLIED ACCORDING TO MANUFACTURER'S SPECIFICATIONS. REFER TO TB- TACKIFIERS AND BINDERS.
4. RYE OR WHEAT CAN BE INCLUDED WITH FALL AND WINTER PLANTINGS TO STABILIZE THE MULCH. THEY SHALL BE APPLIED AT A RATE OF ONE-QUARTER TO ONE HALF BUSHEL PER ACRE.
5. PLASTIC MESH OR NETTING WITH MESH NO LARGER THAN ONE INCH BY ONE INCH MAY BE NEEDED TO ANCHOR STRAW OR HAY MULCH ON UNSTABLE SOILS AND CONCENTRATED FLOW AREAS. THESE MATERIALS SHALL BE INSTALLED AND ANCHORED ACCORDING TO MANUFACTURER'S SPECIFICATIONS.

IRRIGATION

IRRIGATION SHALL BE APPLIED AT A RATE THAT WILL NOT CAUSE RUNOFF.

SEEDING RATE FOR PERMANENT SEEDING

SPECIES	RATE Per 1,000 sq.ft.	RATE per Acre *	PLANTING DATES **
BAHIA	1.4 POUNDS	60 .LBS.	1/1-12/31
BERMUDA	0.2 POUND	10 LBS.	2/15-7/1
CENTIPEDE	BLOCK SOD ONLY	BLOCK SOD ONLY	4/1-7/1
LESPEDEZA	1.7 POUNDS	75 LBS.	1/1-12/31
WEEPING LOVE GRASS	0.1 POUND	4 LBS.	2/1-6/15
FESCUE	1.1 POUNDS	50 LBS.	3/1-4/15 & 9/1-10/15
SWITCH GRASS	0.9 POUND	40 LBS.	3/15-6/1

*Unusual site conditions may require heavier seeding rates
**Seeding dates may need to be altered to fit temperature variations and conditions

Ds3 DISTURBED AREA STABILIZATION WITH PERMANENT SEEDING

APPROPRIATE SOD VARIETIES FOR ATLANTA

GRASS	VARIETY	GROWING SEASON
BERMUDA	COMMON TIFWAY TIFGREEEN, TIFLAWN	WARM WEATHER
BAHIA	PENSACOLA	WARM WEATHER
CENTIPEDE	---	WARM WEATHER
ZOYSIA	EMERALD MEYER	WARM WEATHER
TALL FESCUE	KENTUCKY	COOL WEATHER

SOIL PREPARATION
BRING SOIL SURFACE TO FINAL GRADE. CLEAR SURFACE OF TRASH, WOODY DEBRIS, STONES AND CLODS LARGER THAN 1". APPLY SOD TO SOIL SURFACES ONLY AND NOT FROZEN SURFACES, OR GRAVEL TYPE SOILS.
MIX FERTILIZER INTO SOIL SURFACE. FERTILIZE BASED ON SOIL TESTS OR GENERAL APPLICATION OF 10-10-10 @ 1000 LBS PER ACRE (1 LB /40 SQ. FT.) AGRICULTURAL LIME SHOULD BE APPLIED BASED ON SOIL TESTS OR AT A RATE OF 1 TO 2 TONS / ACRE.

Ds4 STABILIZATION WITH SODDING

GRASS TYPE	PLANTING YEAR	FERTILIZER (NPK)	RATE (LBS/ ACRE)	NITROGEN TOP DRESSING (LBS/ ACRE)
COOL SEASON GRASSES	1ST 2ND MAINTENANCE	6-12-12 6-12-12 10-10-10	1500 1000 400	50-100 — 30
WARM SEASON GRASSES	1ST 2ND MAINTENANCE	6-12-12 6-12-12 10-10-10	1500 800 400	50-100 50-100 30

FERTILIZER RATES FOR PERMANENT VEGETATION (Ds-3)

Du DUST CONTROL

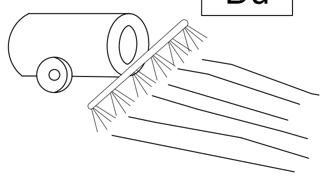

TEMPORARY METHODS
MULCHES. SEE STANDARD DS1 - DISTURBED AREA STABILIZATION (WITH MULCHING ONLY). SYNTHETIC RESINS MAY BE USED INSTEAD OF ASPHALT TO BIND MULCH MATERIAL. REFER TO STANDARD TB-TACKIFIERS AND BINDERS. RESINS SUCH AS CURASOL OR TERRATACK SHOULD BE USED ACCORDING TO MANUFACTURER'S RECOMMENDATIONS.

VEGETATIVE COVER. SEE STANDARD DS2 - DISTURBED AREA STABILIZATION (WITH TEMPORARY SEEDING).

SPRAY-ON ADHESIVES. THESE ARE USED ON MINERAL SOILS (NOT EFFECTIVE ON MUCK SOILS). KEEP TRAFFIC OFF THESE AREAS. REFER TO STANDARD TB-TACKIFIERS AND BINDERS.

TILLAGE. THIS PRACTICE IS DESIGNED TO ROUGHEN AND BRING CLODS TO THE SURFACE. IT IS AN EMERGENCY MEASURE WHICH SHOULD BE USED BEFORE WIND EROSION STARTS.

IRRIGATION. THIS IS GENERALLY DONE AS AN EMERGENCY TREATMENT. SITE IS SPRINKLED WITH WATER UNTIL THE SURFACE IS WET. REPEAT AS NEEDED.

BARRIERS. SOLID BOARD FENCES, SNOWFENCES, BURLAP FENCES, CRATE WALLS, BALES OF HAY AND SIMILAR MATERIAL CAN BE USED TO CONTROL AIR CURRENTS AND SOIL BLOWING. BARRIERS PLACED AT RIGHT ANGLES TO PREVAILING CURRENTS AT INTERVALS OF ABOUT 15 TIMES THEIR HEIGHT ARE EFFECTIVE IN CONTROLLING WIND EROSION.

CALCIUM CHLORIDE. APPLY AT RATE THAT WILL KEEP SURFACE MOIST. MAY NEED RETREATMENT.

PERMANENT METHODS
PERMANENT VEGETATION. SEE STANDARD DS3 -DISTURBED AREA STABILIZATION (WITH PERMANENT VEGETATION). EXISTING TREES AND LARGE SHRUBS MAY AFFORD VALUABLE PROTECTION IF LEFT IN PLACE.

TOPSOILING. THIS ENTAILS COVERING THE SURFACE WITH LESS EROSIVE SOIL MATERIAL. SEE STANDARD TP - TOPSOILING.

STONE. COVER SURFACE WITH CRUSHED STONE OR COARSE GRAVEL. SEE STANDARD CR-CONSTRUCTION ROAD STABILIZATION.

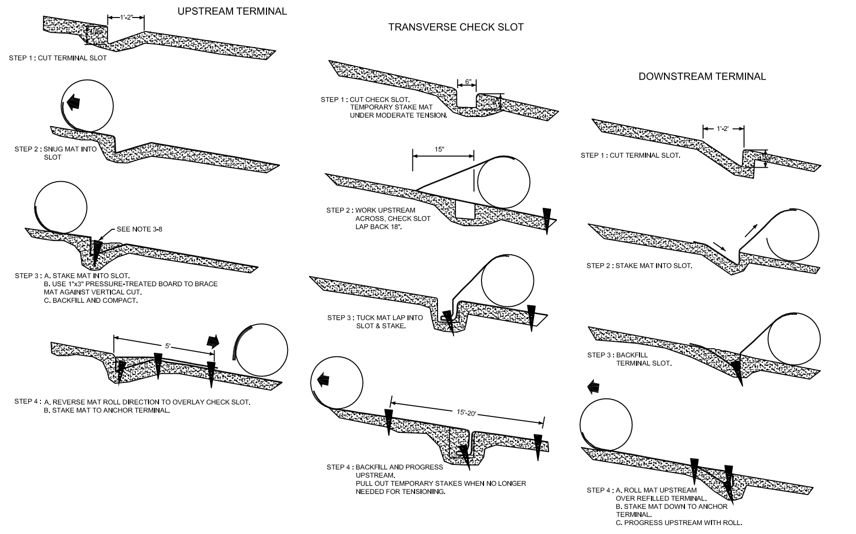
UPSTREAM TERMINAL
1'-2"
STEP 1 : CUT TERMINAL SLOT
STEP 2 : SNUG MAT INTO SLOT
SEE NOTE 3-8
STEP 3 : A. STAKE MAT INTO SLOT.
B. USE 1"x3" PRESSURE-TREATED BOARD TO BRACE MAT AGAINST VERTICAL CUT.
C. BACKFILL AND COMPACT.
5'
STEP 4 : A. REVERSE MAT ROLL DIRECTION TO OVERLAY CHECK SLOT.
B. STAKE MAT TO ANCHOR TERMINAL.
TRANSVERSE CHECK SLOT
6"
STEP 1 : CUT CHECK SLOT.
TEMPORARY STAKE MAT UNDER MODERATE TENSION.
15"
STEP 2 : WORK UPSTREAM ACROSS, CHECK SLOT LAP BACK 18".
STEP 3 : TUCK MAT LAP INTO SLOT & STAKE.
15'-20'
STEP 4 : BACKFILL AND PROGRESS UPSTREAM.
PULL OUT TEMPORARY STAKES WHEN NO LONGER NEEDED FOR TENSIONING.
DOWNSTREAM TERMINAL
1'-2'
STEP 1 : CUT TERMINAL SLOT.
STEP 2 : STAKE MAT INTO SLOT.
STEP 3 : BACKFILL TERMINAL SLOT.
STEP 4 : A. ROLL MAT UPSTREAM OVER REFILLED TERMINAL.
B. STAKE MAT DOWN TO ANCHOR TERMINAL.
C. PROGRESS UPSTREAM WITH ROLL.

SEQUENTIAL ROLL RUN OUT IN CHANNELS

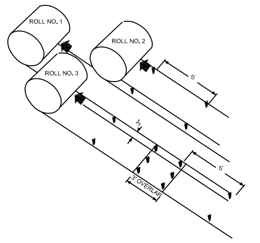

PICTORIAL VIEW OF TRANSVERSE SLOT

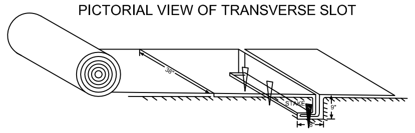

INSTALLATION INSTRUCTIONS
1. START AT DOWNSTREAM TERMINAL AND PROGRESS UPSTREAM.
2. FIRST ROLL IS CENTERED LONGITUDINALLY IN MID CHANNEL AND PINNED WITH TEMPORARY STAKES TO MAINTAIN ALIGNMENT.
3. SUBSEQUENT ROLLS FOLLOW IN STAGGERED SEQUENCE BEHIND FIRST ROLL. FOR ALIGNMENT TO CHANNEL CENTER.
4. WORK OUTWARDS FROM CHANNEL CENTER TO EDGE.
5. USE 3" OVERLAP AND STAKE AT 5' INTERVAL ALONG SEAMS.
6. USE 3" OVERLAPS AND SHINGLE DOWNSTREAM TO CONNECT LINING AT ROLL ENDS.

INSTALLATION NOTES
SITE PREPARATION
AFTER THE SITE HAS BEEN SHAPED AND GRADED TO THE APPROVED DESIGN, PREPARE A FRIABLE SEEDBED RELATIVELY FREE FROM CLODS AND ROCKS MORE THAN ONE INCH IN DIAM -ETER, AND ANY FOREIGN MATERIAL THAT WILL PREVENT CONTACT OF THE SOIL STABILIZATION MAT WITH THE SOIL SURFACE. SURFACE MUST BE SMOOTH TO ENSURE PROPER CONTACT OF BLANKETS OR MATTING TO THE SOIL SURFACE. IF NECESSARY, REDIRECT ANY RUNOFF FROM THE DITCH OR SLOPE DURING INSTALLATION.

STAPLES
THE FOLLOWING ARE CONSIDERED APPROPRIATE STAPLING AND STAKING MATERIALS.

TEMPORARY BLANKETS
THIS INCLUDES STRAW, EXCELSIOR, COCONUT FIBER, AND WOOD FIBER BLANKETS. STAPLES SHALL BE USED TO ANCHOR TEMPORARY BLANKETS. U-SHAPED WIRE (11 GAUGE OR GREATER) STAPLES WITH LEGS AT LEAST 6 INCHES IN LENGTH AND A CROWN OF ONE INCH OR APPROPRIATE BIODEGRADABLE STAPLES CAN BE USED. STAPLES SHALL BE OF SUFFICIENT THICKNESS FOR SOIL PENETRATION WITHOUT UNDUE DISTORTION.

PERMANENT MATTING
SOUND WOOD STAKES, 1X3 INCHES STOCK SAWN IN A TRIANGULAR SHAPE, SHALL BE USED. DEPENDING ON THE COMPACTION OF THE SOIL, SELECT STAKES WITH A LENGTH FROM 12 TO 18 INCHES. U-SHAPED STAPLES SHALL BE 11 GAUGE STEEL OR GREATER, WITH LEGS AT A MINIMUM OF 8 INCHES LENGTH WITH A 2 INCH CROWN.

PLANTING
LIME, FERTILIZER, AND SEED SHALL BE APPLIED IN ACCORDANCE WITH SEEDING OR OTHER TYPE OF PLANTING PLAN COMPLETED PRIOR TO INSTALLATION OF TEMPORARY COMBINATION BLANKETS OR JUTE MESH. FOR PERMANENT MATS, THE AREA MUST BE BROUGHT TO FINAL GRADE, PLOWED, LIMED, AND FERTILIZED. AFTER THE PERMANENT MAT HAS BEEN INSTALLED AND BACKFILLED, THE ENTIRE AREA SHALL BE GRASSED. REFER TO SPECIFICATION DS3 - DISTURBED AREA STABILIZATION ET(WITH PERMANENT VEGETATION).

MAINTENANCE
ALL EROSION CONTROL BLANKETS AND MATTING SHOULD BE INSPECTED PERIODICALLY FOLLOWING INSTALLATION, PARTICULARLY AFTER RAINSTORMS TO CHECK FOR EROSION AND UNDERMINING. ANY DISLOCATION OR FAILURE SHOULD BE REPAIRED IMMEDIATELY. IF WASHOUTS OR BREAKAGE OCCURS, REINSTALL THE MATERIAL AFTER REPAIRING DAMAGE TO THE SLOPE OR DITCH. CONTINUE TO MONITOR THESE AREAS UNTIL THEY BECOME PERMANENTLY STABILIZED.

Ss SLOPE STABILIZATION EROSION CONTROL MATTING AND BLANKETS

24 HOUR CONTACT
CRAIG MILSAP
770-387-5151

GSWCC LEVEL II CERTIFICATION NUMBER
GEORGIA REGISTRATION NO. GA #3422 ②

VEGETATION NOTES

MULCH OR TEMPORARY GRASSING SHALL BE APPLIED TO ALL EXPOSED AREAS WITHIN 14 DAYS OF DISTURBANCE. TEMPORARY GRASSING, INSTEAD OF MULCH, CAN BE APPLIED TO ROUGH GRADED AREAS THAT WILL BE EXPOSED FOR LESS THAN SIX MONTHS. IF AN AREA IS EXPECTED TO BE UNDISTURBED FOR LONGER THAN SIX MONTHS, PERMANENT PERENNIAL VEGETATION SHALL BE USED. IF OPTIMUM PLANTING CONDITIONS FOR TEMPORARY GRASSING IS LACKING, MULCH CAN BE USED AS A SINGULAR EROSION CONTROL DEVICE FOR UP TO SIX MONTHS BUT IT SHALL BE APPLIED AT THE APPROPRIATE DEPTH, ANCHORED, AND HAVE A CONTINUOUS 90% COVER OR GREATER OF THE SOIL SURFACE. REFER TO SPECIFICATION DS1-DISTURBED AREA STABILIZATION (WITH MULCHING ONLY).

WHEN A HYDRAULIC SEEDER IS USED, SEEDBED PREPARATION IS NOT REQUIRED. WHEN USING CONVENTIONAL OR HANDSEEDING, SEEDBED PREPARATION IS NOT REQUIRED IF THE SOIL MATERIAL IS LOOSE AND NOT SEALED BY RAINFALL. WHEN SOIL HAS BEEN SEALED BY RAINFALL OR CONSISTS OF SMOOTH CUT SLOPES, THE SOIL SHALL BE PITTED, TRENCHED OR OTHERWISE SCARIFIED TO PROVIDE A PLACE FOR SEED TO LODGE AND GERMINATE.

LIME AND FERTILIZER (TEMPORARY VEGETATION, DS-2)
AGRICULTURAL LIME IS REQUIRED UNLESS SOIL TESTS INDICATE OTHERWISE. APPLY AGRICULTURAL LIME AT A RATE OF ONE TON PER ACRE. GRADED AREAS REQUIRE LIME APPLICATION. SOILS CAN BE TESTED TO DETERMINE IF FERTILIZER IS NEEDED. ON REASONABLY FERTILE SOILS OR SOIL MATERIAL, FERTILIZER IS NOT REQUIRED. FOR SOILS WITH VERY LOW FERTILITY, 500 TO 700 POUNDS OF 10-10-10 FERTILIZER OR THE EQUIVALENT PER ACRE (12-16 LBS./1,000 SQ. FT.) SHALL BE APPLIED. FERTILIZER SHOULD BE APPLIED BEFORE LAND PREPARATION AND INCORPORATED WITH A DISK, RIPPER OR CHISEL.

LIME AND FERTILIZER RATES AND ANALYSIS (PERMANENT VEGETATION, DS-3)
AGRICULTURAL LIME IS REQUIRED AT THE RATE OF ONE TO TWO TONS PER ACRE UNLESS SOIL TESTS INDICATE OTHERWISE. GRADED AREAS REQUIRE LIME APPLICATION. IF LIME IS APPLIED WITHIN SIX MONTHS OF PLANTING PERMANENT PERENNIAL VEGETATION, ADDITIONAL LIME IS NOT REQUIRED. AGRICULTURAL LIME SHALL BE WITHIN THE SPECIFICATIONS OF THE GEORGIA DEPARTMENT OF AGRICULTURE. INITIAL FERTILIZATION, NITROGEN, TOPDRESSING, AND MAINTENANCE FERTILIZER REQUIREMENTS FOR EACH SPECIES OR COMBINATION OF SPECIES ARE LISTED IN TABLE 6-5.1.

MULCHING
MULCH IS REQUIRED FOR ALL PERMANENT VEGETATION APPLICATIONS. MULCH APPLIED TO SEEDED AREAS SHALL ACHIEVE 75% SOIL COVER. SELECT THE MULCHING MATERIAL FROM THE FOLLOWING AND APPLY AS INDICATED:
1. DRY STRAW OR DRY HAY OF GOOD QUALITY AND FREE OF WEED SEEDS CAN BE USED. DRY STRAW SHALL BE APPLIED AT THE RATE OF 2 TONS PER ACRE. DRY HAY SHALL BE APPLIED AT A RATE OF 2 1/2 TONS PER ACRE.
2. WOOD CELLULOSE MULCH OR WOOD PULP FIBER SHALL BE USED WITH HYDRAULIC SEEDING. IT SHALL BE APPLIED AT THE RATE OF 500 POUNDS PER ACRE. DRY STRAW OR DRY HAY SHALL BE APPLIED (AT THE RATE INDICATED ABOVE) AFTER HYDRAULIC SEEDING.
3. ONE THOUSAND POUNDS OF WOOD CELLULOSE OR WOOD PULP FIBER, WHICH INCLUDES A TACKIFIER, SHALL BE USED WITH HYDRAULIC SEEDING ON SLOPES 3/4:1 OR STEEPER.
4. SERICEA LESPEDEZA HAY CONTAINING MATURE SEED SHALL BE APPLIED AT A RATE OF THREE TONS PER ACRE.
5. PINE STRAW OR PINE BARK SHALL BE APPLIED AT A THICKNESS OF 3 INCHES FOR BEDDING PURPOSES. OTHER SUITABLE MATERIALS IN SUFFICIENT QUANTITY MAY BE USED WHERE ORNAMENTALS OR OTHER GROUND COVERS ARE PLANTED. THIS IS NOT APPROPRIATE FOR SEEDED AREAS.
6. WHEN USING TEMPORARY EROSION CONTROL BLANKETS OR BLOCK SOD, MULCH IS NOT REQUIRED.
7. BITUMINOUS TREATED ROVING MAY BE APPLIED ON PLANTED AREAS ON SLOPES, IN DITCHES OR DRY WATERWAYS TO PREVENT EROSION. BITUMINOUS TREATED ROVING SHALL BE APPLIED WITHIN 24 HOURS AFTER AN AREA HAS BEEN PLANTED. APPLICATION RATES AND MATERIALS MUST MEET GEORGIA DEPARTMENT OF TRANSPORTATION SPECIFICATIONS.

PROJECT NO.:
14137

DATE:
04/28/15

REVISIONS:

	DATE	DESCRIPTION
1	3/25/15	CITY SUB
2	4/01/15	OUTLET REV
3	4/27/15	2ND SUB CITY
4		
5		
6		

SOUTHLAND
ENGINEERING
CIVIL ENGINEERS - LAND SURVEYORS - LAND PLANNERS
114 OLD MILL ROAD., CARTERSVILLE, GA 30120
PH: 770.387.0440 FAX: 770.607.5151

BARTOW COUNTY
FIRE STATION #9
LOCATED IN LAND LOTS 856 & 857
4TH DISTRICT, 3RD SECTION
CARTERSVILLE, GEORGIA

KARL P. LUTJENS

SHEET TITLE:
EROSION CONTROL VEGETATION NOTES & DETAILS

SHEET NO.:
C507

PROJECT NAME AND LOCATION
BARTOW COUNTY FIRE STATION #9
171 BROWN FARM ROAD
CARTERSVILLE, GEORGIA 30120

OWNER
CITY OF CARTERSVILLE
1 NORTH ERWIN STREET
CARTERSVILLE, GEORGIA 30120
PHONE: 770-387-5616

STATE WATER /WETLAND ㊳㊴

THERE ARE STATE WATERS LOCATED WITHIN 200 FEET OF THE PROJECT SITE. THERE ARE NO TROUT STREAMS LOCATED ON OR WITHIN 200 FEET OF THE PROJECT SITE. SEE SHEET C501 FOR STATE WATERS DELINEATION.

RECEIVING WATER ⑪ ㉑ ㉒ ㊵

THE PROJECT'S INITIAL RECEIVING WATER IS AN UNNAMED TRIBUTARY OF THE ETOWAH RIVER, A WARM WATER STREAM. IT IS NOT AN IMPAIRED STREAM SEGMENT. THERE ARE NO SENSITIVE AREAS ON SITE, INCLUDING STREAMS, LAKES, RESIDENTIAL AREAS, WETLANDS, ETC. NO ADJACENT AREAS WILL BE AFFECTED.

SITE LOCATION ⑦

THE SITE IS LOCATED WITHIN LAND LOTS 856 & 857, OF THE 4TH DISTRICT, 3RD SECTION, CITY OF CARTERSVILLE, BARTOW COUNTY, GA.
CONSTRUCTION EXIT GPS LOCATION: LAT: 34.129483 LONG: -84.859909

OFFSITE VEHICLE TRACKING

A STABILIZED CONSTRUCTION ENTRANCE WILL BE PROVIDED TO HELP REDUCE VEHICLE TRACKING OF SEDIMENTS. THE PAVED STREET ADJACENT TO THE SITE ENTRANCE WILL BE SWEPT DAILY TO REMOVE ANY EXCESS MUD, DIRT OR ROCK TRACKED FROM THE SITE. DUMP TRUCKS HAULING MATERIAL FROM THE CONSTRUCTION SITE WILL BE COVERED. IF DURING CONSTRUCTION THE GENERATION OF DUST BECOMES AN ISSUE THE CONTRACTOR IS TO PROVIDE "DU" DUST CONTROL.

STATE STREAM BUFFERS ⑮

NON-EXEMPT ACTIVITIES SHALL NOT BE CONDUCTED WITHIN A 25 OR 50 FOOT UNDISTURBED STREAM BUFFERS AS MEASURED FROM THE POINT OF WRESTED VEGETATION WITHOUT FIRST ACQUIRING THE NECESSARY VARIANCES AND PERMITS.

PETROLEUM SPECIFIC PRACTICES

CONTAINERS FOR PRODUCTS SUCH AS FUELS, LUBRICANTS AND TARS WILL BE INSPECTED DAILY FOR LEAKS AND SPILLS. THIS INCLUDES ON-SITE VEHICLE AND MACHINERY DAILY INSPECTIONS AND REGULAR PREVENTATIVE MAINTENANCE OF SUCH EQUIPMENT. EQUIPMENT MAINTENANCE AREAS WILL BE LOCATED AWAY FROM STATE WATER, NATURAL DRAINS AND STORMWATER DISCHARGE INLETS. IN ADDITION, TEMPORARY FUELING TANKS SHALL HAVE A SECONDARY CONTAINMENT LINER TO PREVENT/MINIMIZE SITE CONTAMINATION. DISCHARGE OF OILS, FUELS AND DISPOSAL AS REQUIRED BY LOCAL AND STATE REGULATIONS.

FERTILIZERS/HERBICIDES

THESE PRODUCTS WILL BE APPLIED AT RATES THAT DO NOT EXCEED THE MANUFACTURER'S SPECIFICATIONS OR ABOVE THE GUIDELINES SET FORTH IN THE CROP ESTABLISHMENT OR IN THE GSWCC MANUAL FRO EROSION AND SEDIMENT CONTROL IN GEORGIA. ANY STORAGE OF THESE MATERIALS WILL BE UNDER ROOF IN SEALED CONTAINERS.

PAINTS/FINISHES/SOLVENTS

ALL PRODUCTS WILL BE STORED IN TIGHTLY SEALED ORIGINAL CONTAINERS WHEN NOT IN USE. EXCESS PRODUCT WILL NOT BE DISCHARGED TO THE STORM WATER COLLECTION SYSTEM. EXCESS PRODUCT, MATERIALS USED WITH THESE PRODUCTS AND PRODUCT CONTAINERS WILL BE DISPOSED OF ACCORDING TO MANUFACTURER'S SPECIFICATIONS AND RECOMMENDATIONS.

CONCRETE TRUCKS ㉓

NO CONCRETE TRUCKS WILL BE ALLOWED TO WASH OUT OR DISCHARGE SURPLUS CONCRETE OR DRUM WASH WATER ONSITE. CONCRETE TRUCK CHUTE AND TOOLS MAY BE WASHED OUT IN THE DESIGNATED WASHOUT AREA ONLY.

BUILDING MATERIALS

NO BUILDING OR CONSTRUCTION MATERIALS WILL BE BURIED OR DISPOSED OF ONSITE. ALL SUCH MATERIAL WILL BE DISPOSED OF IN PROPER WASTE DISPOSAL PROCEDURES.

AMENDMENTS TO PLAN ⑯

AMENDMENTS/REVISIONS TO THE ES&PC PLAN WHICH HAVE A SIGNIFICANT EFFECT ON BMP'S WITH A HYDRAULIC COMPONENT MUST BE CERTIFIED BY THE DESIGN PROFESSIONAL.

THE PRIMARY PERMITTEE SHALL HAVE PLANS AMENDED BY THE DESIGN PROFESSIONAL WHENEVER THERE IS A CHANGE IN DESIGN, CONSTRUCTION, OPERATION, OR MAINTENANCE, WHICH HAS A SIGNIFICANT EFFECT ON BMP'S WITH A HYDRAULIC COMPONENT, I.E., THOSE BMPS WHERE THE DESIGN IS BASED UPON RAINFALL INTENSITY, DURATION AND RETURN FREQUENCY OF STORMS OR ON THE POTENTIAL FOR THE DISCHARGE OF POLLUTANTS TO THE WATERS OF GEORGIA AND WHICH HAS NOT OTHERWISE BEEN ADDRESSED IN THE PLAN.

AMENDMENTS TO THE PLAN MUST BE CERTIFIED BY A DESIGN PROFESSIONAL. SECONDARY PERMITTEES MUST NOTIFY THE PRIMARY PERMITTEE WITHIN 24 HOURS OF BECOMING AWARE OF ANY SUSPECTED BMP DESIGNED DEFICIENCIES WHICH ARE NOT EFFECTIVE IN CONTROLLING THE DISCHARGE OF POLLUTANTS FROM THE SITE.

PRE/POST DEVELOPED SITE CHARACTERISTICS/NARRATIVE: ⑨ ㊹

THE EXISTING SITE CONSISTS OF A RELATIVELY FLAT AREA ON THE NORTH WEST PORTION OF THE LOT, TO AN AVERAGE SLOPE OF +/-4% TO THE SOUTH WEST. THE PROPERTY HAS NO STRUCTURES AND CONSISTS OF GRASSLAND, BRUSH AND TREES. RUN-OFF FROM THE SITE CONTRIBUTES TO AN UNNAMED TRIBUTARY OF THE ETOWAH RIVER. NEIGHBORING AREAS INCLUDE PRIMARILY INDUSTRIAL AND COMMERCIAL WITH SOME RESIDENTIAL PROPERTY. THE PROPOSED DEVELOPMENT IS THE CONSTRUCTION OF A FIRE STATION WITH ASPHALT ACCESS DRIVES AND PARKING FACILITIES. THE PROPERTY IS ZONED L-I, LIGHT INDUSTRIAL. THE SITE IS LOCATED IN LAND LOTS 856 & 857 OF THE 4TH DISTRICT, 3ND SECTION, CARTERSVILLE, GEORGIA. ALL EROSION AND SEDIMENT CONTROL MEASURES SHALL BE IN ACCORDANCE WITH BEST MANAGEMENT PRACTICES, AS NEEDED, TO PREVENT TRANSPORTATION OF SEDIMENT FROM THE SITE. THE SITE CONTAINS TWO SOIL TYPES (SEE SOIL MAP, C501 FOR SOIL DELINEATION)

ESTIMATED RUNOFF COEFFICIENT ㊷

ONSITE DRAINAGE BASIN

PRE-DEVELOPED	55
POST-DEVELOPED	88

NOTE: SEE HYDROLOGY REPORT FOR DETAILED CALCULATIONS AND MAPS.

WASTE DISPOSAL ⑰

WASTE MATERIAL SHALL NOT BE DISCHARGED TO WATERS OF THE STATE, EXCEPT AS AUTHORIZED BY A SECTION 404 PERMIT.

ALL WASTE MATERIALS SHALL BE COLLECTED AND STORED IN A SECURELY LIDDED METAL DUMPSTER. THE DUMPSTER WILL MEET ALL SOLID WASTE MANAGEMENT REGULATIONS. ALL TRASH AND CONSTRUCTION DEBRIS FROM THE SITE WILL BE DEPOSITED OF IN THE DUMPSTER. THE DUMPSTER WILL BE EMPTIED A MINIMUM OF ONCE PER WEEK OR MORE OFTEN IF NECESSARY AND TRASH WILL BE HAULED AS REQUIRED BY LOCAL REGULATIONS, TO A STATE APPROVED LANDFILL. NOT WASTE SHALL BE BURIED ON SITE. ALL PERSONNEL WILL BE INSTRUCTED REGARDING THE CORRECT PROCEDURE FOR WASTE DISPOSAL. NOTICES STATING THESE PRACTICES WILL BE POSTED AT THE CONSTRUCTION SITE BY THE CONSTRUCTION SUPERINTENDENT, THE INDIVIDUAL WHO MANAGES THE DAY-TO-DAY SITE OPERATIONS, WILL BE RESPONSIBLE FOR SEEING THAT THESE PROCEDURES ARE FOLLOWED.

LIMITS OF DISTURBANCE: ③

THE PROPOSED SITE CONSTRUCTION WILL NOT DISTURB MORE THAN 50 ACRES AT ONE TIME.

ALTERNATIVE BMP: ㊲

NO ALTERNATIVE BMP'S HAVE BEEN SPECIFIED.

POTENTIAL POLLUTION: ㉖

NO POTENTIAL SOURCES OF STORMWATER POLLUTION IS EXPECTED TO BE PRESENT ONSITE.

STORM WATER MANAGEMENT AFTER CONSTRUCTION IS COMPLETE ㉕

THE SITE HAS BEEN DESIGNED TO ACCOMMODATE POLLUTANTS IN STORMWATER AFTER CONSTRUCTION IS COMPLETE, BY PROVIDING A STORMWATER SYSTEM THAT ROUTES ALL STORMWATER INTO AN EXISTING STORMWATER POND. THE STORMWATER POND CONTAINS 100% OF THE WATER QUALITY VOLUME ASSOCIATED WITH THIS DEVELOPMENT. THE STORMWATER POND HAS A T.S.S (TOTAL SUSPENDED SOLIDS) REMOVAL OF 80%, WHICH MEETS THE MINIMUM STANDARDS.

SANITARY WASTE ㉔

A MINIMUM OF ONE PORTABLE SANITARY UNIT WILL BE PROVIDED FOR EVERY TEN (10) WORKERS ON THE SITE. ALL SANITARY WASTE WILL BE COLLECTED FROM THE PORTABLE UNITS A MINIMUM OF ONE TIME PER WEEK BY A LICENSED PORTABLE FACILITY PROVIDER IN COMPLETE COMPLIANCE WITH LOCAL STATE REGULATIONS. ALL SANITARY WASTE UNITS WILL BE LOCATED IN AN AREA WHERE THE LIKELIHOOD OF THE UNIT CONTRIBUTING TO STORMWATER DISCHARGE IS NEGLIGIBLE. ADDITIONAL CONTAINMENT BMP'S MUST BE IMPLEMENTED SUCH AS GRAVEL BAGS OR SPECIALLY DESIGNED PLASTIC SKID CONTAINERS AROUND THE BASE, TO PREVENT WASTES FROM CONTRIBUTING TO STORM WATER DISCHARGES. THE LOCATION OF SANITARY WASTE UNITS MUST BE IDENTIFIED ON THE EROSION CONTROL PLAN GRADING PHASE. SANITARY SEWER WILL BE PROVIDED BY MUNICIPAL AUTHORITY SEWER SYSTEM AT THE COMPLETION OF THIS PROJECT.

INVENTORY FOR POLLUTION PREVENTION PLAN ㉔

THE MATERIALS OR SUBSTANCES LISTED BELOW ARE EXPECTED TO BE PRESENT ONSITE DURING CONSTRUCTION:

☒ Concrete
☒ Asphalt
☒ Tar
☒ Detergents
☐ ______

☒ Fertilizers
☒ Petroleum Based Products
☒ Cleaning Solvents
☒ Paints
☐ _______

☒ Wood
☒ Masonry Blocks
☐ Roofing Materials
☐ Metal Studs
☐ _______

SPILL PREVENTION

MATERIAL MANAGEMENT PRACTICES

THE FOLLOWING ARE THE MATERIAL MANAGEMENT PRACTICES THAT WILL BE USED TO REDUCE THE RISK OF SPILLS OR OTHER ACCIDENTAL EXPOSURE OF MATERIALS AND SUBSTANCES TO STORM WATER RUNOFF.

GOOD HOUSEKEEPING

THE FOLLOWING GOOD HOUSEKEEPING PRACTICES WILL BE FOLLOWED ONSITE DURING THE CONSTRUCTION PROJECT.

* AN EFFORT WILL BE MADE TO STORE ONLY ENOUGH PRODUCT REQUIRED TO DO THE JOB.
* ALL MATERIALS STORED ONSITE WILL BE STORED IN A NEAT, ORDERLY MANNER IN THEIR APPROPRIATE CONTAINERS AND, IF POSSIBLE, UNDER A ROOF OR OTHER ENCLOSURE.
* PRODUCTS WILL BE KEPT IN THEIR ORIGINAL CONTAINERS WITH THE ORIGINAL MANUFACTURER'S LABEL.
* SUBSTANCES WILL NOT BE MIXED WITH ONE ANOTHER UNLESS RECOMMENDED BY THE MANUFACTURER.
* THE SITE SUPERINTENDENT WILL INSPECT DAILY TO ENSURE MATERIALS ONSITE RECEIVE PROPER USE AND DISPOSAL.

㉔ HAZARDOUS PRODUCTS

THESE PRACTICES ARE USED TO REDUCE THE RISKS ASSOCIATED WITH HAZARDOUS MATERIALS.

* PRODUCTS WILL BE KEPT IN ORIGINAL CONTAINERS UNLESS THEY ARE NOT RESEALABLE.

* ORIGINAL LABELS AND MATERIAL SAFETY DATA WILL BE RETAINED; THEY CONTAIN IMPORTANT PRODUCT INFORMATION.

* IF SURPLUS PRODUCT MUST BE DISPOSED OF, MANUFACTURER'S OR LOCAL AND STATE RECOMMENDED METHODS FOR PROPER DISPOSAL WILL BE FOLLOWED.
PRODUCT SPECIFIC PRACTICES THE FOLLOWING PRODUCT SPECIFIC PRACTICES WILL BE FOLLOWED ON-SITE:

PETROLEUM SPECIFIC PRACTICES

CONTAINERS FOR PRODUCTS SUCH AS FUELS, LUBRICANTS AND TARS WILL BE INSPECTED DAILY FOR LEAKS AND SPILLS. THIS INCLUDES ON-SITE VEHICLE AND MACHINERY DAILY INSPECTIONS AND REGULAR PREVENTATIVE MAINTENANCE OF SUCH EQUIPMENT. EQUIPMENT MAINTENANCE AREAS WILL BE LOCATED AWAY FROM STATE WATER, NATURAL DRAINS AND STORMWATER DISCHARGE INLETS. IN ADDITION, TEMPORARY FUELING TANKS SHALL HAVE A SECONDARY CONTAINMENT LINER TO PREVENT/MINIMIZE SITE CONTAMINATION. DISCHARGE OF OILS, FUELS AND DISPOSAL AS REQUIRED BY LOCAL AND STATE REGULATIONS.

SPILL CLEANUP AND CONTROL PRACTICES

LOCAL, STATE AND MANUFACTURER'S RECOMMENDED METHODS FOR SPILL CLEANUP WILL BE CLEARLY POSTED AND PROCEDURES WILL BE MADE AVAILABLE TO SITE PERSONNEL. MATERIALS AND EQUIPMENT NECESSARY FOR SPILL CLEANUP WILL BE KEPT IN THE MATERIAL STORAGE AREA ON-SITE. EQUIPMENT AND MATERIALS WILL INCLUDE BUT NOT BE LIMITED TO BROOMS, DUST PANS, MOPS, RAGS, GLOVES, GOGGLES, CAT LITTER, SAND, SAWDUST, AND PROPERLY LABELED PLASTIC AND METAL WASTE CONTAINERS. SPILL PREVENTION PRACTICES AND PROCEDURES WILL BE REVIEWED AFTER A SPILL AND ADJUSTED AS NECESSARY TO PREVENT FUTURE SPILLS. ALL SPILLS WILL BE CLEANED UP IMMEDIATELY UPON DISCOVERY. ALL SPILLS WILL BE REPORTED AS REQUIRED BY LOCAL, STATE AND FEDERAL REGULATIONS. FOR SPILLS THAT IMPACT SURFACE WATER (LEAVE A SHEEN ON SURFACE WATER). THE NATIONAL RESPONSE CENTER (NRC) WILL BE CONTACTED WITHIN 24 HOURS AT 1-800-426-2675. FOR SPILLS OF AN UNKNOWN AMOUNT. THE NATIONAL CENTER WILL BE CONTACTED WITHIN 24 HOURS AT 1800-425-2675. FOR SPILLS GREATER THAN 25 GALLONS AND NO SURFACE WATER IMPACTS, THE GEORGIA EPD WILL BE CONTACTED WITHIN 24 HOURS. FOR SPILLS LESS THAT 25 GALLONS AND NO SURFACE WATER IMPACTS, THE SPILL WILL BE CLEANED UP AND LOCAL AGENCIES WILL BE CONTACTED AS REQUIRED. THE CONTRACTOR SHALL NOTIFY THE LICENSED PROFESSIONAL WHO PREPARED THIS PLAN IF MORE THAN 1320 GALLONS OF PETROLEUM IS STORED ONSITE (THIS INCLUDES CAPACITIES OF EQUIPMENT) OR IF ANY ONE PIECE OF EQUIPMENT HAS A CAPACITY GREATER THAN 660 GALLONS. THE CONTRACTOR WILL NEED A SPILL PREVENTION CONTAINMENT AND COUNTERMEASURES PLAN PREPARED BY THAT LICENSED PROFESSIONAL.

THE SPILL AREA WILL BE KEPT WELL VENTILATED AND PERSONNEL WILL WEAR APPROPRIATE PROTECTIVE CLOTHING TO PREVENT INJURY FROM CONTACT WITH A HAZARDOUS SUBSTANCE.

THE SITE SUPERINTENDENT RESPONSIBLE FOR THE DAY-TO-DAY SITE OPERATIONS, WILL BE THE SPILL PREVENTION AND CLEANUP COORDINATOR. HE/SHE WILL DESIGNATE AT LEAST ONE OTHER SITE PERSONNEL WHO WILL RECEIVE SPILL PREVENTION AND CLEANUP TRAINING. THESE INDIVIDUALS WILL EACH BECOME RESPONSIBLE FOR A PARTICULAR PHASE OF PREVENTION AND CLEANUP. THE NAMES OF RESPONSIBLE SPILL PERSONNEL WILL BE POSTED IN THE MATERIAL STORAGE AREA AND IF APPLICABLE, IN THE OFFICE TRAILER ONSITE.

HAZARDOUS WASTE

ALL HAZARDOUS WASTE MATERIALS WILL BE DISPOSED OF IN THE MANNER SPECIFIED BY LOCAL, STATE, AND/OR FEDERAL REGULATIONS AND BY THE MANUFACTURER OF SUCH PRODUCTS. THE JOB SITE SUPERINTENDENT, WHO WILL ALSO BE RESPONSIBLE FOR SEEING THAT THESE PRACTICES ARE FOLLOWED, WILL INSTRUCT SITE PERSONNEL IN THESE PRACTICES. MATERIAL SAFETY DATA SHEETS (MSDS'S) FOR EACH SUBSTANCE WITH HAZARDOUS PROPERTIES THAT IS USED ON THE JOB SITE WILL BE OBTAINED AND USED FOR THE PROPER MANAGEMENT OF POTENTIAL WASTES THAT MAY RESULT FROM THESE PRODUCTS. AN MSDS WILL BE POSTED IN THE IMMEDIATE AREA WHERE SUCH PRODUCT IS STORED AND/OR USED AND ANOTHER COPY OF EACH MSDS WILL BE MAINTAINED IN THE ESPCP PLAN AT THE JOB SITE CONSTRUCTION TRAILER OFFICE. EACH EMPLOYEE WHO MUST HANDLE A SUBSTANCE WITH HAZARDOUS PROPERTIES WILL BE INSTRUCTED ON THE USE OF MSDS SHEETS AND THE SPECIFIC INFORMATION IN THE APPLICABLE MSDS FOR THE PRODUCT HE/SHE IS USING, PARTICULARLY REGARDING SPILL CONTROL TECHNIQUES. THE CONTRACTOR WILL IMPLEMENT THE SPILL PREVENTION CONTROL AND COUNTERMEASURES (SPCC) PLAN FOUND WITHIN THE ESPCP AND WILL TRAIN ALL PERSONNEL IN THE PROPER CLEANUP AND HANDLING OF SPILLED MATERIAL. NO SPILLED MATERIAL OR HAZARDOUS WASTES WILL BE ALLOWED TO COME IN CONTACT WITH STORMWATER DISCHARGES. IF SUCH CONTACT OCCURS, THE STORMWATER DISCHARGE WILL BE CONTAINED ON SITE AND UNTIL APPROPRIATE MEASURES IN COMPLIANCE WITH STATE AND FEDERAL REGULATIONS ARE TAKEN TO DISPOSE OF SUCH CONTAMINATED STORMWATER. IT SHALL BE THE RESPONSIBILITY OF THE JOB SITE SUPERINTENDENT TO PROPERLY TRAIN ALL PERSONNEL IN THE USE OF THE SPCC PLAN.

INSPECTIONS: ㉘

a. PERMITTEE REQUIREMENTS

1. EACH DAY WHEN ANY TYPE OF CONSTRUCTION ACTIVITY HAS TAKEN PLACE AT A PRIMARY PERMITTEE'S SITE, CERTIFIED PERSONNEL PROVIDED BY THE PRIMARY PERMITTEE SHALL INSPECT: (A) ALL AREAS AT THE PRIMARY PERMITTEE'S SITE WHERE PETROLEUM PRODUCTS ARE STORED, USED, OR HANDLED FOR SPILLS AND LEAKS FROM VEHICLES AND EQUIPMENT AND (B) ALL LOCATIONS AT THE PRIMARY PERMITTEE'S SITE WHERE VEHICLES ENTER OR EXIT THE SITE FOR EVIDENCE OF OFF-SITE SEDIMENT TRACKING. THESE INSPECTIONS MUST BE CONDUCTED UNTIL A NOTICE OF TERMINATION IS SUBMITTED.
2. MEASURE RAINFALL ONCE EVERY 24 HOURS EXCEPT ANY NON-WORKING SATURDAY, NON-WORKING SUNDAY AND NON-WORKING FEDERAL HOLIDAY UNTIL A NOTICE OF TERMINATION IS SUBMITTED. MEASUREMENT OF RAINFALL MAY BE SUSPENDED IF ALL AREAS OF THE SITE HAVE UNDERGONE FINAL STABILIZATION OR ESTABLISHED A CROP OF ANNUAL VEGETATION AND A SEEDING OF TARGET PERENNIALS APPROPRIATE FOR THE REGION.
3. CERTIFIED PERSONNEL (PROVIDED BY THE PRIMARY PERMITTEE) SHALL INSPECT THE FOLLOW AT LEAST ONCE EVERY SEVEN (7) CALENDAR DAYS AND WITHIN 24 HOURS OF THE END OF A STORM THAT IS 0.5 INCHES RAINFALL OR GREATER (UNLESS SUCH STORM ENDS AFTER 5:00 PM ON ANY FRIDAY OR ON ANY NON-WORKING SATURDAY, NON-WORKING SUNDAY OR ANY NON-WORKING FEDERAL HOLIDAY IN WHICH CASE THE INSPECTION SHALL BE COMPLETED BY THE END OF THE NEXT BUSINESS DAY AND/OR WORKING DAY, WHICHEVER OCCURS FIRST) : (A) DISTURBED AREAS OF THE PRIMARY PERMITTEE'S CONSTRUCTION SITE ; (B) AREAS USED BY THE PRIMARY PERMITTEE FOR STORAGE OF MATERIALS THAT ARE EXPOSED TO PRECIPITATION ; AND (C) STRUCTURAL CONTROL MEASURES. EROSION AND SEDIMENT CONTROL MEASURES IDENTIFIED IN THE PLAN APPLICABLE TO THE PRIMARY PERMITTEE'S SITE SHALL BE OBSERVED TO ENSURE THAT THEY ARE OPERATING CORRECTLY. WHERE DISCHARGE LOCATIONS OR POINTS ARE ACCESSIBLE, THEY SHALL BE INSPECTED TO ASCERTAIN WHETHER EROSION CONTROL MEASURES ARE EFFECTIVE IN PREVENTING SIGNIFICANT IMPACTS TO RECEIVING WATER(S). FOR AREAS OF A SITE THAT HAVE UNDERGONE FINAL STABILIZATION OR ESTABLISHED A CROP OF ANNUAL VEGETATION AND A SEEDING OF TARGET PERENNIALS APPROPRIATE FOR THE REGION, THE PERMITTEE MUST COMPLY WITH PART IV.D.4.A.(4). THESE INSPECTIONS MUST BE CONDUCTED UNTIL A NOTICE OF TERMINATION IS SUBMITTED.
4. CERTIFIED PERSONNEL (PROVIDED BY THE PRIMARY PERMITTEE) SHALL INSPECT AT LEAST ONCE PER MONTH DURING THE TERM OF THIS PERMIT (I.E., UNTIL A NOTICE OF TERMINATION IS RECEIVED BY EPD) THE AREAS OF THE SITE THAT HAVE UNDERGONE FINAL STABILIZATION OR ESTABLISHED A CROP OF ANNUAL VEGETATION AND A SEEDING OF TARGET PERENNIALS APPROPRIATE FOR THE REGION. THESE AREAS SHALL BE INSPECTED FOR EVIDENCE OF, OR THE POTENTIAL FOR, POLLUTANTS ENTERING THE DRAINAGE SYSTEM AND THE RECEIVING WATER(S). EROSION AND SEDIMENT CONTROL MEASURES IDENTIFIED IN THE PLAN SHALL BE OBSERVED TO ENSURE THAT THEY ARE OPERATING CORRECTLY. WHERE DISCHARGE LOCATIONS OR POINTS ARE ACCESSIBLE, THEY SHALL BE INSPECTED TO ASCERTAIN WHETHER EROSION CONTROL MEASURES ARE EFFECTIVE IN PREVENTING SIGNIFICANT IMPACTS TO RECEIVING WATER(S).
5. BASED ON THE RESULTS OF EACH INSPECTION, THE SITE DESCRIPTION AND THE POLLUTION PREVENTION AND CONTROL MEASURES IDENTIFIED IN THE EROSION, SEDIMENTATION AND POLLUTION CONTROL PLAN, THE PLAN SHALL BE REVISED AS APPROPRIATE NOT LATER THAN SEVEN (7) CALENDAR DAYS FOLLOWING EACH INSPECTION. IMPLEMENTATION OF SUCH CHANGES SHALL BE MADE AS SOON AS PRACTICAL BUT IN NO CASE LATER THAN SEVEN (7) CALENDAR DAYS FOLLOWING EACH INSPECTION.
6. A REPORT OF EACH INSPECTION THAT INCLUDES THE NAME(S) OF CERTIFIED PERSONNEL MAKING EACH INSPECTION, THE DATE(S) OF EACH INSPECTION, CONSTRUCTION PHASE (I.E., INITIAL, INTERMEDIATE OR FINAL), MAJOR OBSERVATIONS RELATING TO THE IMPLEMENTATION OF THE EROSION, SEDIMENTATION AND POLLUTION CONTROL PLAN, AND ACTIONS TAKEN IN ACCORDANCE WITH PART IV.D.4.A.(5). OF THE PERMIT SHALL BE MADE AND RETAINED AT THE SITE OR BE READILY AVAILABLE AT A DESIGNATED ALTERNATE LOCATION UNTIL THE ENTIRE SITE OR THAT PORTION OF A CONSTRUCTION PROJECT THAT HAS BEEN PHASED HAS UNDERGONE FINAL STABILIZATION AND A NOTICE OF TERMINATION IS SUBMITTED TO EPD. SUCH REPORTS SHALL BE READILY AVAILABLE BY END OF THE SECOND BUSINESS DAY AND.OR WORKING DAY AND SHALL IDENTIFY ALL INCIDENTS OF BEST MANAGEMENT PRACTICES THAT HAVE NOT BEEN PROPERLY INSTALLED AND/OR MAINTAINED AS DESCRIBED IN THE PLAN. WHERE THE REPORT DOES NOT IDENTIFY ANY INCIDENTS, THE INSPECTION REPORT SHALL CONTAIN A CERTIFICATION THAT THE BEST MANAGEMENT PRACTICES ARE IN COMPLIANCE WITH THE EROSION, SEDIMENTATION AND POLLUTION CONTROL PLAN. THE REPORT SHALL BE SIGNED IN ACCORDANCE WITH PART V.G.2. OF THIS PERMIT.

MAINTENANCE.

THE PLAN SHALL INCLUDE A DESCRIPTION OF PROCEDURES TO ENSURE THE TIMELY MAINTENANCE OF VEGETATION, EROSION AND SEDIMENT CONTROL MEASURES AND OTHER PROTECTIVE MEASURES IDENTIFIED IN THE SITE PLAN.

SAMPLING REQUIREMENTS ㉛

THIS PERMIT REQUIRES THE MONITORING OF NEPHELOMETRIC TURBIDITY IN RECEIVING WATER(S) OR OUTFALLS IN ACCORDANCE WITH THIS PERMIT. THIS PARAGRAPH SHALL NOT APPLY TO ANY LAND DISTURBANCE ASSOCIATED WITH THE CONSTRUCTION OF SINGLE-FAMILY HOMES WHICH ARE NOT PART OF A SUBDIVISION OR PLANNED COMMON DEVELOPMENT UNLESS FIVE (5) ACRES OR MORE WILL BE DISTURBED. THE FOLLOWING PROCEDURES CONSTITUTE EPD'S GUIDELINES FOR SAMPLING TURBIDITY.

a. SAMPLING REQUIREMENTS SHALL INCLUDE THE FOLLOWING:

1. A USGS TOPOGRAPHIC MAP, A TOPOGRAPHIC MAP OR A DRAWING (REFERRED TO AS A TOPOGRAPHIC MAP) THAT IS A SCALE EQUAL TO OR MORE DETAILED THAN A 1:24000 MAP SHOWING THE LOCATION OF THE SITE OR THE STAND ALONE CONSTRUCTION; (A) THE LOCATION OF ALL PERENNIAL AND INTERMITTENT STREAMS AND OTHER WATER BODIES AS SHOWN ON A USGS TOPOGRAPHIC MAP, AND ALL OTHER PERENNIAL AND INTERMITTENT STREAMS AND OTHER WATER BODIES LOCATED DURING MANDATORY FIELD VERIFICATION, INTO WHICH THE STORM WATER IS DISCHARGED AND (B) THE RECEIVING WATER AND/OR OUTFALL SAMPLING LOCATIONS. WHEN THE PERMITTEE HAS CHOSEN TO USE A USGS TOPOGRAPHIC MAP AND THE RECEIVING WATER(S) IS NOT SHOWN ON THE USGS TOPOGRAPHIC MAP, THE LOCATION OF THE RECEIVING WATER(S) MUST BE HAND-DOWN ON THE USGS TOPOGRAPHIC MAP FROM WHERE THE STORM WATER(S) ENTERS THE RECEIVING WATER(S) TO THE POINT WHERE THE RECEIVING WATER(S) COMBINES WITH THE FIRST BLUE LINE STREAM SHOWN ON THE USGS TOPOGRAPHIC MAP;
2. A WRITTEN NARRATIVE OF SITE SPECIFIC ANALYTICAL METHODS USED TO COLLECT, HANDLE AND ANALYZE THE SAMPLES INCLUDING QUALITY CONTROL/QUALITY ASSURANCE PROCEDURES. THIS NARRATIVE MUST INCLUDE PRECISE SAMPLING METHODOLOGY FOR EACH SAMPLING LOCATION;
3. WHEN THE PERMITTEE HAS DETERMINED THAT SOME OR ALL OUTFALLS WILL BE SAMPLED, A RATIONALE MUST BE INCLUDED ON THE PLAN FOR THE NTU LIMIT(S) SELECTED FROM APPENDIX B. THIS RATIONALE MUST INCLUDE THE SIZE OF THE CONSTRUCTION SITE, THE CALCULATION OF THE SIZE OF THE SURFACE WATER DRAINAGE AREA, AND THE TYPE OF RECEIVING WATER(S) (I.E., TROUT STREAM OR SUPPORTING WARM WATER FISHERIES); AND
4. ANY ADDITIONAL INFORMATION EPD DETERMINES NECESSARY TO BE PART OF THE PLAN. EPD WILL PROVIDE WRITTEN NOTICE TO THE PERMITTEE OF THE INFORMATION NECESSARY AND THE TIME LINE FOR SUBMITTAL.

b. SAMPLE TYPE. ALL SAMPLING SHALL BE COLLECTED BY "GRAB SAMPLES" AND THE ANALYSIS OF THESE SAMPLES MUST BE CONDUCTED IN ACCORDANCE WITH METHODOLOGY AND TEST PROCEDURES ESTABLISHED BY 40 CFR PART 136 (UNLESS OTHER TEST PROCEDURES HAVE BEEN APPROVED); THE GUIDANCE DOCUMENT TITLED "NPDES STORM WATER SAMPLING GUIDANCE DOCUMENT, EPA 833-B-92-001" AND GUIDANCE DOCUMENTS THAT MAY BE PREPARED BY THE EPD.

1. SAMPLE CONTAINERS SHOULD BE LABELED PRIOR TO COLLECTING THE SAMPLES.
2. SAMPLES SHOULD BE WELL MIXED BEFORE TRANSFERRING TO A SECONDARY CONTAINER.
3. LARGE MOUTH, WELL CLEANED AND RINSED GLASS OR PLASTIC JARS SHOULD BE USED FOR COLLECTING SAMPLES. THE JARS SHOULD BE CLEANED THOROUGHLY TO AVOID CONTAMINATION.
4. MANUAL, AUTOMATIC OR RISING STAGE SAMPLING MAY BE UTILIZED. SAMPLES REQUIRED BY THIS PERMIT SHOULD BE ANALYZED IMMEDIATELY, BUT IN NO CASE LATER THAN 48 HOURS AFTER COLLECTION. HOWEVER, SAMPLES FROM AUTOMATIC SAMPLERS MUST BE COLLECTED NO LATER THAN THE NEXT BUSINESS DAY AFTER THEIR ACCUMULATION, UNLESS FLOW THROUGH AUTOMATED ANALYSIS IS UTILIZED. IF AUTOMATIC SAMPLING IS UTILIZED AND THE AUTOMATIC SAMPLER IS NOT ACTIVATED DURING THE QUALIFYING EVENT, THE PERMITTEE MUST UTILIZE MANUAL SAMPLING OR RISING STAGE SAMPLING DURING THE NEXT QUALIFYING EVENT. DILUTION OF SAMPLES IS NOT REQUIRED. SAMPLES MAY BE ANALYZED DIRECTLY WITH A PROPERLY CALIBRATED TUBIDIMETER. SAMPLES ARE NOT REQUIRED TO BE COOLED.
5. SAMPLING AND ANALYSIS OF THE RECEIVING WATER(S) OR OUTFALLS BEYOND THE MINIMUM FREQUENCY STATED IN THIS PERMIT MUST BE REPORTED TO EPD AS SPECIFIED IN PART IV.E.

SAMPLING POINTS

1. FOR CONSTRUCTION ACTIVITIES THE PRIMARY PERMITTEE MUST SAMPLE ALL RECEIVING WATER(S), OR ALL OUTFALL(S), OR A COMBINATION OF RECEIVING WATER(S) AND OUTFALL(S). SAMPLES TAKEN FOR THE PURPOSE OF COMPLIANCE WITH THIS PERMIT SHALL BE REPRESENTATIVE OF THE MONITORED ACTIVITY AND REPRESENTATIVE OF THE WATER QUALITY OF THE RECEIVING WATER(S) AND/OR THE STORM WATER OUTFALLS USING THE FOLLOWING MINIMUM GUIDELINES:

a. THE UPSTREAM SAMPLE FOR EACH RECEIVING WATER(S) MUST BE TAKEN IMMEDIATELY UPSTREAM OF THE CONFLUENCE OF THE FIRST STORM WATER DISCHARGE FROM THE PERMITTED ACTIVITY (I,E., THE DISCHARGE FARTHEST UPSTREAM AT THE SITE) BUT DOWNSTREAM OF ANY OTHER STORM WATER DISCHARGES NOT ASSOCIATED WITH THE PERMITTED ACTIVITY. WHERE APPROPRIATE, SEVERAL UPSTREAM SAMPLES FROM ACROSS THE RECEIVING WATER(S) MAY NEED TO BE TAKEN AND THE ARITHMETIC AVERAGE OF THE TURBIDITY OF THESE SAMPLES USED FOR THE UPSTREAM TURBIDITY VALUE.

b. THE DOWNSTREAM SAMPLE FOR EACH RECEIVING WATER(S) MUST BE TAKEN DOWNSTREAM OF THE CONFLUENCE OF THE LAST STORM WATER DISCHARGE FROM THE PERMITTED ACTIVITY (I.E., THE DISCHARGE FARTHEST DOWNSTREAM AT THE SITE) BUT UPSTREAM OF ANY OTHER STORM WATER DISCHARGE NOT ASSOCIATED WITH THE PERMITTED ACTIVITY. WHERE APPROPRIATE, SEVERAL DOWNSTREAM SAMPLES FROM ACROSS THE RECEIVING WATER(S) MAY NEED TO BE TAKEN AND THE ARITHMETIC AVERAGE OF THE TURBIDITY OF THESE SAMPLES USED FOR THE DOWNSTREAM TURBIDITY VALUE.

c. IDEALLY THE SAMPLES SHOULD BE TAKEN FROM THE HORIZONTAL AND VERTICAL CENTER OF THE RECEIVING WATER(S) OR THE STORM WATER OUTFALL CHANNEL(S).

d. CARE SHOULD BE TAKEN TO AVOID STIRRING THE BOTTOM SEDIMENTS IN THE RECEIVING WATER(S) OR IN THE OUTFALL STORM WATER CHANNEL.

e. THE SAMPLING CONTAINER SHOULD BE HELD SO THAT THE OPENING FACES UPSTREAM.

f. THE SAMPLES SHOULD BE KEPT FREE FROM FLOATING DEBRIS.

g. PERMITTEES DO NOT HAVE THE SAMPLE SHEETFLOW THAT FLOWS ONTO UNDISTURBED NATURAL AREAS OR AREAS STABILIZED BY THE PROJECT. FOR PURPOSES OF THIS SECTION, STABILIZED SHALL MEAN, FOR UNPAVED AREAS AND AREAS NOT COVERED BY PERMANENT STRUCTURES AND AREAS LOCATED OUTSIDE THE WASTE DISPOSAL LIMITS OF A LANDFILL CELL THAT HAS BEEN CERTIFIED BY EPD FOR WASTE DISPOSAL, 100% OF THE SOIL SURFACE IS UNIFORMLY COVERED IN PERMANENT VEGETATION WITH DENSITY OF 70% OR GREATER, OR LANDSCAPED ACCORDING TO THE PLAN (UNIFORMLY COVERED WITH LANDSCAPING MATERIALS IN PLANNED LANDSCAPED AREAS), OR EQUIVALENT PERMANENT STABILIZATION MEASURES AS DEFINED IN THE MANUAL (EXCLUDING A CROP OF ANNUAL VEGETATION AND A SEEDING OF TARGET CROP PERENNIALS APPROPRIATE FOR THE REGION).

h. ALL SAMPLING PURSUANT TO THIS PERMIT MUST BE DONE IN SUCH A WAY (INCLUDING GENERALLY ACCEPTED SAMPLING METHODS, LOCATIONS, TIMING, AND FREQUENCY) AS TO ACCURATELY REFLECT WHETHER STORM WATER RUNOFF FROM THE CONSTRUCTION SITE IS IN COMPLIANCE WITH THE STANDARD SET FORTH IN PARTS III.D.3. OR III.D.4.., WHICHEVER IS APPLICABLE.

SAMPLING FREQUENCY㉙

1. THE PRIMARY PERMITTEE MUST SAMPLE IN ACCORDANCE WITH THE PLAN AT LEAST ONCE FOR EACH RAINFALL EVENT DESCRIBED BELOW. FOR A QUALIFYING EVENT, THE PERMITTEE SHALL SAMPLE AT THE BEGINNING OF ANY STORM WATER DISCHARGE TO A MONITORED RECEIVING WATER AND/OR FROM A MONITORED OUTFALL LOCATION WITHIN IN FORTY-FIVE (45) MINUTES OR AS SOON AS POSSIBLE.
2. HOWEVER, WHERE MANUAL AND AUTOMATIC SAMPLING ARE IMPOSSIBLE (AS DEFINED IN THIS PERMIT), OR ARE BEYOND THE PERMITTEE'S CONTROL, THE PERMITTEE SHALL TAKE SAMPLES AS SOON AS POSSIBLE, BUT IN NO CASE MORE THAN TWELVE (12) HOURS AFTER THE BEGINNING OF THE STORM WATER DISCHARGE.
3. SAMPLING BY THE PERMITTEE SHALL OCCUR FOR THE FOLLOWING QUALIFYING EVENTS:

a. FOR EACH AREA OF THE SITE THAT DISCHARGES TO A RECEIVING WATER OR FROM AN OUTFALL, THE FIRST RAIN EVENT THAT REACHES OR EXCEEDS 0.5 INCH WITH A STORM WATER DISCHARGE THAT OCCURS DURING NORMAL BUSINESS HOURS AS DEFINED IN THIS PERMIT AFTER ALL CLEARING AND GRUBBING OPERATIONS HAVE BEEN COMPLETED, BUT PRIOR TO COMPLETION OF MASS GRADING OPERATIONS, IN THE DRAINAGE AREA OF THE LOCATION SELECTED AS THE SAMPLING LOCATION;

b. IN ADDITION TO (A) ABOVE, FOR EACH AREA OF THE SITE THAT DISCHARGES TO A RECEIVING WATER OR RFOM AN OUTFALL, THE FIRST RAIN EVENT THAT REACHES OR EXCEEDS 0.5 INCH WITH A STORM WATER DISCHARGE THAT OCCURS DURING NORMAL BUSINESS HOURS AS DEFINED IN THIS PERMIT EITHER 90 DAYS AFTER THE FIRST SAMPLING EVENT OR AFTER ALL MASS GRADING OPERATIONS HAVE BEEN COMPLETED, BUT PRIOR TO SUBMITTAL OF A NOT, IN THE DRAINAGE AREA OF THE LOCATION SELECTED AS THE SAMPLING LOCATION, WHICHEVER COMES FIRST;

c. AT THE TIME OF SAMPLING PERFORMED PURSUANT TO (A) AND (B) ABOVE, IF BMPS IN ANY AREA OF THE SITE THAT DISCHARGES TO A RECEIVING WATER OR FROM AN OUTFALL ARE NOT PROPERLY DESIGNED, INSTALLED AND MAINTAINED, CORRECTIVE ACTION SHALL BE DEFINED AND IMPLEMENTED WITHIN TWO (2) BUSINESS DAYS, AND TURBIDITY SAMPLES SHALL BE TAKEN FROM DISCHARGES FROM THAT REA OF THE SITE FOR EACH SUBSEQUENT RAIN EVENT THAT REACHES OR EXCEEDS 0.5 INCH DURING NORMAL BUSINESS HOURS* UNTIL THE SELECTED TURBIDITY STANDARD IS ATTAINED, OR UNTIL POST-STORM EVENT INSPECTIONS DETERMINE THAT BMPS ARE PROPERLY DESIGNED, INSTALLED AND MAINTAINED;

d. WHERE SAMPLING PURSUANT TO (A), (B) OR (C) ABOVE IS REQUIRED BUT NOT POSSIBLE (OR NOT REQUIRED BECAUSE THERE WAS NO DISCHARGE), THE PERMITTEE, IN ACCORDANCE WITH PART IV.D.4.A.(6), MUST INCLUDE A WRITTEN JUSTIFICATION IN THE INSPECTION REPORT OF WHY SAMPLING WAS NOT PERFORMED. PROVIDING THIS JUSTIFICATION DOES NOT RELIEVE THE PERMITTEE OF ANY SUBSEQUENT SAMPLING OBLIGATIONS UNDER (A), (B) OR (C) ABOVE; AND

e. EXISTING CONSTRUCTION ACTIVITIES, I.E., THOSE THAT ARE OCCURRING ON OR BEFORE THE EFFECTIVE DATE OF THIS PERMIT, THAT HAVE MET THE SAMPLING REQUIRED BY (A) ABOVE SHALL SAMPLE IN ACCORDANCE WITH (B). THOSE EXISTING CONSTRUCTION ACTIVITIES THAT HAVE MET THE SAMPLING REQUIRED BY (B) ABOVE SHALL NOT BE REQUIRED TO CONDUCT ADDITIONAL SAMPLING OTHER THAN AS REQUIRED BY (C) ABOVE.

- NOTE THAT THE PERMITTEE MAY CHOOSE TO MEET THE REQUIREMENTS OF (A) AND (B) ABOVE BY COLLECTION TURBIDITY SAMPLES FROM ANY RAIN EVENT THAT REACHES OR EXCEEDS 0.5 INCH AND ALLOWS FOR SAMPLING AT ANY TIME OF THE DAY OR WEEK.

NON-STORM WATER DISCHARGES.

EXCEPT FOR FLOWS FROM FIRE FIGHTING ACTIVITIES, SOURCES OF NON-STORM WATER LISTED IN PART III.A.2. OF THIS PERMIT THAT ARE COMBINED WITH STORM WATER DISCHARGES ASSOCIATED WITH CONSTRUCTION ACTIVITY MUST BE IDENTIFIED IN THE PLAN. THE PLAN SHALL IDENTIFY AND ENSURE THE IMPLEMENTATION OF APPROPRIATE POLLUTION PREVENTION MEASURES FOR THE NON-STORM WATER COMPONENT(S) OF THE DISCHARGE.

REPORTING

1. THE APPLICABLE PERMITTEES ARE REQUIRED TO SUBMIT THE SAMPLING RESULTS TO THE EPD AT THE ADDRESS SHOWN IN PART II.C. BY THE FIFTEENTH DAY OF THE MONTH FOLLOWING THE REPORTING PERIOD. REPORTING PERIODS ARE MONTHS DURING WHICH SAMPLES ARE TAKEN IN ACCORDANCE WITH THIS PERMIT. SAMPLING RESULTS SHALL BE IN A CLEARLY LEGIBLE FORMAT. UPON WRITTEN NOTIFICATION, EPD MAY REQUIRE THE APPLICABLE PERMITTEE TO SUBMIT THE SAMPLING RESULTS ON A MORE FREQUENT BASIS. SAMPLING AND ANALYSIS OF ANY STORM WATER DISCHARGE(S) OR THE RECEIVING WATER(S) BEYOND THE MINIMUM FREQUENCY STATED IN THIS PERMIT MUST BE REPORTED IN A SIMILAR MANNER TO THE EPD. THE SAMPLING REPORTS MUST BE SIGNED IN ACCORDANCE WITH PART V.G.2 SAMPLING REPORTS MUST BE SUBMITTED TO EPD UNTIL SUCH TIME AS A NOT IS SUBMITTED IN ACCORDANCE WITH PART VI.
2. ALL SAMPLING REPORTS SHALL INCLUDE THE FOLLOWING INFORMATION:
   a. THE RAINFALL AMOUNT, DATE, EXACT PLACE AND TIME OF SAMPLING OR MEASUREMENTS;
   b. THE NAME(S) OF THE CERTIFIED PERSONNEL WHO PERFORMED THE SAMPLING AND MEASUREMENTS;

I CERTIFY THAT THE PERMITTEE'S EROSION AND SEDIMENTATION AND POLLUTION CONTROL PLAN, PROVIDES FOR AN APPROPRIATE AND COMPREHENSIVE SYSTEM OF BEST MANAGEMENT PRACTICES REQUIRED BY THE GEORGIA WATER QUALITY CONTROL ACT AND THE DOCUMENT "MANUAL FOR EROSION AND SEDIMENT CONTROL IN GEORGIA, PUBLISHED BY THE STATE SOIL AND WATER CONSERVATION COMMISSION AS OF JANUARY 1 OF THE YEAR IN WHICH THE LAND-DISTURBING ACTIVITY WAS PERMITTED, PROVIDES FOR THE SAMPLING OF THE RECEIVING WATER(S) OR THE SAMPLING OF THE STORM WATER OUTFALLS AND THAT THE DESIGNED SYSTEM OF BEST MANAGEMENT PRACTICES AND SAMPLING METHODS IS EXPECTED TO MEET REQUIREMENTS CONTAINED IN THE GENERAL NPDES PERMIT NOS. GAR 1000001, GAR 1000002, AND GAR 1000003".

SIGNATURE 4-28-15 DATE ⑬

I CERTIFY UNDER PENALTY OF LAW THAT THIS PLAN WAS PREPARED AFTER A SITE VISIT TO THE LOCATIONS DESCRIBED HERE-IN BY MYSELF OR MY AUTHORIZED AGENT UNDER MY DIRECT SUPERVISION.

SIGNATURE 4-28-15 DATE ⑫

7-DAY INSPECTION: ⑭

THE DESIGN PROFESSIONAL WHO PREPARED THE ES&PC PLAN IS TO INSPECT THE INSTALLATION OF THE INITIAL SEDIMENT STORAGE REQUIREMENTS AND PERIMETER CONTROL BMP'S WITHIN 7 DAYS AFTER INSTALLATION.

DESIGN PROFESSIONAL 7-DAY VISIT CERTIFICATION

DATE OF INSPECTION:_______________________________

I CERTIFY THE SITE WAS IN COMPLIANCE WITH THE ES&PC PLAN ON THE DATE OF INSPECTION.

____
GSWCC LEVEL II DESIGN PROFESSIONAL CERTIFICATION #

INSPECTION REVEALED THE FOLLOWING DISCREPANCIES FROM THE ES&LC PLAN:

____

____

THESE DISCREPANCIES MUST BE ADDRESSED IMMEDIATELY AND A RE-INSPECTION SCHEDULED. WORK SHALL NOT PROCEED ON THE SITE UNTIL DESIGN PROFESSIONAL CERTIFICATION IS OBTAINED.

REPORTING (CONT.)

c. THE DATE(S) ANALYSES WERE PERFORMED;
d. THE TIME(S) ANALYSES WERE INITIATED;
e. THE NAME(S) OF THE CERTIFIED PERSONNEL WHO PERFORMED THE ANALYSES;
f. REFERENCES AND WRITTEN PROCEDURES, WHEN AVAILABLE, FOR THE ANALYTICAL TECHNIQUES OR METHODS USED;
g. THE RESULTS OF SUCH ANALYSES, INCLUDING THE BENCH SHEETS, INSTRUMENT READOUTS, COMPUTER DISKS OR TAPES, ETC., USED TO DETERMINE THESE RESULTS;
h. RESULTS WHICH EXCEED 1000 NTU SHALL BE REPORTED AS "EXCEEDS 100 NTU;" AND
i. CERTIFICATION STATEMENT THAT SAMPLING WAS CONDUCTED AS PER THE PLAN.

3. ALL WRITTEN CORRESPONDENCE REQUIRED BY THIS PERMIT SHALL BE SUBMITTED BY RETURN RECEIPT CERTIFIED MAIL (OR SIMILAR SERVICE) TO THE APPROPRIATE DISTRICT OFFICE OF THE EPF ACCORDING TO THE SCHEDULE IN APPENDIX A OF THIS PERMIT. THE PERMITTEE SHALL RETAIN A COPY OF THE PROOF OF SUBMITTAL AT THE CONSTRUCTION SITE OR THE PROOF OF SUBMITTAL SHALL BE READILY AVAILABLE AT THE DESIGNATED LOCATION FROM COMMENCEMENT OF CONSTRUCTION UNTIL SUCH TIME AS A NOT IS SUBMITTED IN ACCORDANCE WITH PART VI. IF AN ELECTRONIC SUBMITTAL IS PROVIDED BY EPD THEN THE WRITTEN CORRESPONDENCE MAY BE SUBMITTED ELECTRONICALLY; IF REQUIRED, A PAPER COPY MUST ALSO BE SUBMITTED BY RETURN RECEIPT CERTIFIED MAIL OR SIMILAR SERVICE.

RETENTION OF RECORDS ㉚

1. THE PRIMARY PERMITTEE SHALL RETAIN THE FOLLOWING RECORD AT THE CONSTRUCTION SITE OR THE RECORDS SHALL BE READILY AVAILABLE AT A DESIGNATED ALTERNATE LOCATION FROM COMMENCEMENT OF CONSTRUCTION UNTIL SUCH TIME AS A NOT IS SUBMITTED IN ACCORDANCE WITH PART VI:
   a. A COPY OF ALL NOTICES OF INTENT SUBMITTED TO EPD;
   b. A COPY OF THE EROSION, SEDIMENTATION AND POLLUTION CONTROL PLAN REQUIRED BY THIS PERMIT;
   c. THE DESIGN PROFESSIONAL'S REPORT OF THE RESULTS OF THE INSPECTION CONDUCTED IN ACCORDANCE WITH PART IV.A.5. OF THIS PERMIT;
   d. A COPY OF ALL SAMPLING INFORMATION, RESULTS, AND REPORTS REQUIRED BY THIS PERMIT;
   e. A COPY OF ALL INSPECTION REPORTS GENERATED IN ACCORDANCE WITH PART IV.D.4.A. OF THIS PERMIT;
   f. A COPY OF ALL VIOLATION SUMMARIES AND VIOLATION SUMMARY REPORTS GENERATED IN ACCORDANCE WITH PART III.D.2. OF THIS PERMIT; AND
   g. DAILY RAINFALL INFORMATION COLLECTED IN ACCORDANCE WITH PART IV.D.4.A.(2). OF THIS PERMIT.
2. COPIES OF ALL NOTICES OF INTENT, NOTICES OF TERMINATION, INSPECTION REPORTS, SAMPLING REPORTS (INCLUDING ALL CALIBRATION AND MAINTENANCE RECORDS AND ALL ORIGINAL STRIP CHART RECORDINGS FOR CONTINUOUS MONITORING INSTRUMENTATION) OR OTHER REPORTS REQUESTED BY THE EPD, EROSION, SEDIMENTATION AND POLLUTION CONTROL PLANS, RECORDS OF ALL DATA USED TO COMPLETE THE NOTICE OF INTENT TO BE COVERED BY THIS PERMIT AND ALL OTHER RECORDS REQUIRED BY THIS PERMIT SHALL BE RETAINED BY THE PERMITTEE WHO EITHER PRODUCED OR USED IT FOR A PERIOD OF AT LEAST THREE YEARS FROM THE DATE THAT THE NOT IS SUBMITTED IN ACCORDANCE WITH PART VI. OF THIS PERMIT. THESE RECORDS MUST BE MAINTAINED AT THE PERMITTEE'S PRIMARY PLACE OF BUSINESS OR AT A DESIGNATED ALTERNATIVE LOCATION ONCE THE CONSTRUCTION ACTIVITY HAS CEASED AT THE PERMITTED SITE. THIS PERIOD MAY BE EXTENDED BY REQUEST OF THE EPD AT ANY TIME UPON WRITTEN NOTIFICATION TO THE PERMITTEE.

㉜

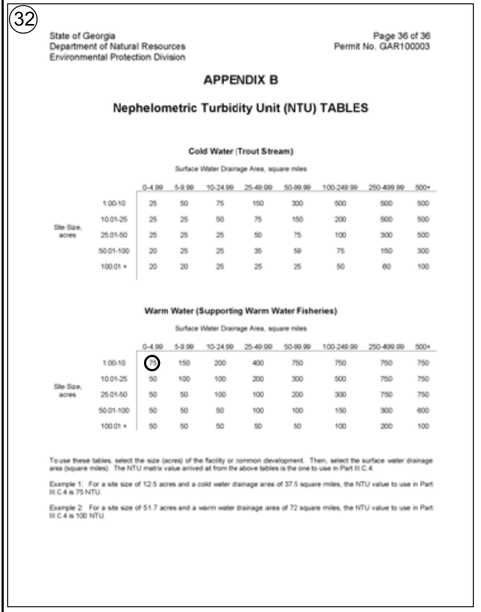

State of Georgia
Department of Natural Resources
Environmental Protection Division

Page 36 of 36
Permit No. GAR100003

APPENDIX B

Nephelometric Turbidity Unit (NTU) TABLES

Cold Water (Trout Stream)

Warm Water (Supporting Warm Water Fisheries)

⑥ ㊺
TOTAL SITE AREA = 3.51 ACRES
INITIAL DISTURBED AREA= 1.89 ACRES
TOTAL DISTURBED AREA = 4.70 ACRES
(SEE SHEET C501-C503 FOR EACH PHASE OF THE LIMITS OF DISTURBANCE)

PRIMARY PERMITTEE ⑤
BARTOW COUNTY GOV.
135 WEST CHEROKEE AVE.
CARTERSVILLE, GA 30120
TELEPHONE: 770-386-5151

811
Know what's below.
Call before you dig.

24 HOUR CONTACT
CRAIG MILSAP
770-387-5151

GSWCC LEVEL II CERTIFICATION NUMBER
GEORGIA REGISTRATION NO. GA #3422 ②

PROJECT NO.: 14137
DATE: 04/28/15

REVISIONS:

	DATE	DESCRIPTION
1	3/25/15	CITY SUB
2	4/01/15	OUTLET REV
3	4/27/15	2ND SUB CITY
4		
5		
6		

SOUTHLAND ENGINEERING
CIVIL ENGINEERS - LAND SURVEYORS - LAND PLANNERS
114 OLD MILL ROAD., CARTERSVILLE, GA 30120 PH: 770.387.0440 FAX: 770.607.5151

BARTOW COUNTY
FIRE STATION #9
LOCATED IN LAND LOTS 856 & 857
4TH DISTRICT, 3RD SECTION
CARTERSVILLE, GEORGIA

KARL P. LUTJENS

SHEET TITLE:
STORM WATER POLLUTION PREVENTION PLAN

SHEET NO.:
C508

24 HOUR CONTACT
CRAIG MILSAP
770-387-5151

811
Know what's below.
Call before you dig.

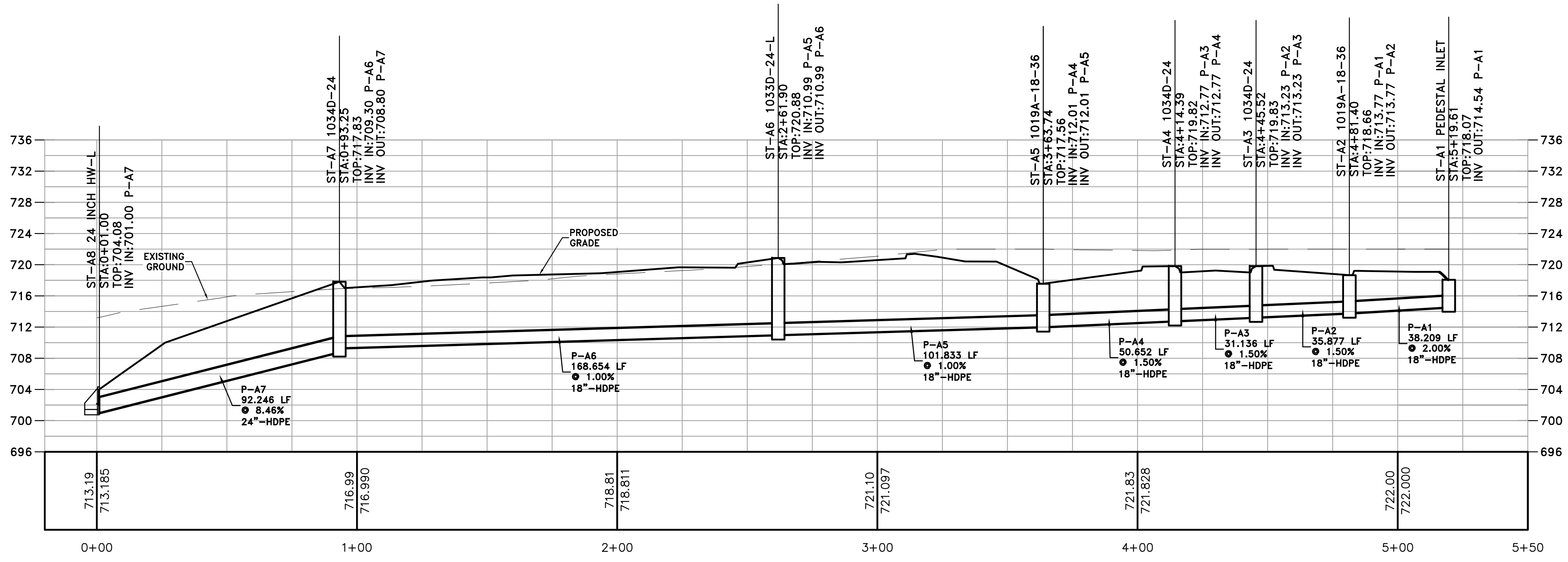
ST–A8 24 INCH HW–L
STA:0+01.00
TOP:704.08
INV IN:701.00 P–A7
ST–A7 1034D–24
STA:0+93.25
TOP:717.83
INV IN:709.30 P–A6
INV OUT:708.80 P–A7
ST–A6 1033D–24–L
STA:2+61.90
TOP:720.88
INV IN:710.99 P–A5
INV OUT:710.99 P–A6
ST–A5 1019A–18–36
STA:3+63.74
TOP:717.56
INV IN:712.01 P–A4
INV OUT:712.01 P–A5
ST–A4 1034D–24
STA:4+14.39
TOP:719.82
INV IN:712.77 P–A3
INV OUT:712.77 P–A4
ST–A3 1034D–24
STA:4+45.52
TOP:719.83
INV IN:713.23 P–A2
INV OUT:713.23 P–A3
ST–A2 1019A–18–36
STA:4+81.40
TOP:718.66
INV IN:713.77 P–A1
INV OUT:713.77 P–A2
ST–A1 PEDESTAL INLET
STA:5+19.61
TOP:718.07
INV OUT:714.54 P–A1
EXISTING GROUND
PROPOSED GRADE
P–A7 92.246 LF @ 8.46% 24"–HDPE
P–A6 168.654 LF @ 1.00% 18"–HDPE
P–A5 101.833 LF @ 1.00% 18"–HDPE
P–A4 50.652 LF @ 1.50% 18"–HDPE
P–A3 31.136 LF @ 1.50% 18"–HDPE
P–A2 35.877 LF @ 1.50% 18"–HDPE
P–A1 38.209 LF @ 2.00% 18"–HDPE
736
732
728
724
720
716
712
708
704
700
696
713.19
713.185
716.99
716.990
718.81
718.811
721.10
721.097
721.83
721.828
722.00
722.000
0+00
1+00
2+00
3+00
4+00
5+00
5+50

STORM A
VERTICAL SCALE: 10.00
HORIZONTAL SCALE: 30.00

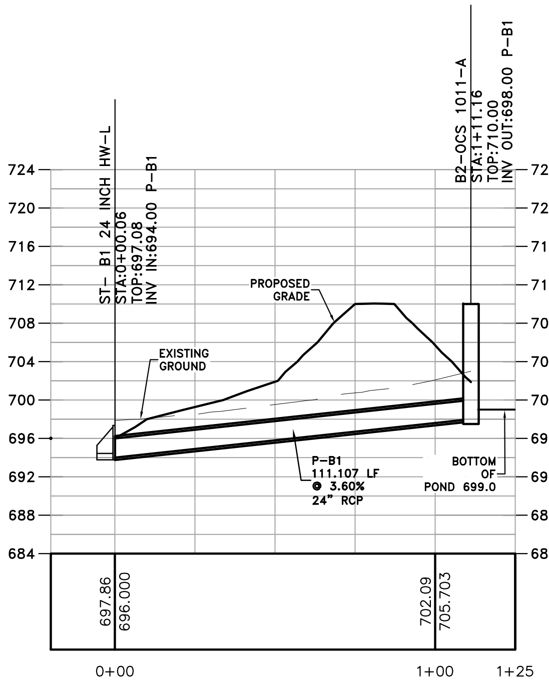
ST– B1 24 INCH HW–L
STA:0+00.06
TOP:697.08
INV IN:694.00 P–B1
B2–OCS 1011–A
STA:1+11.16
TOP:710.00
INV OUT:698.00 P–B1
PROPOSED GRADE
EXISTING GROUND
P–B1 111.107 LF @ 3.60% 24" RCP
BOTTOM OF POND 699.0
724
720
716
712
708
704
700
696
692
688
684
697.86
696.000
702.09
705.703
0+00
1+00
1+25

STORM B
VERTICAL SCALE: 10.00
HORIZONTAL SCALE: 30.00

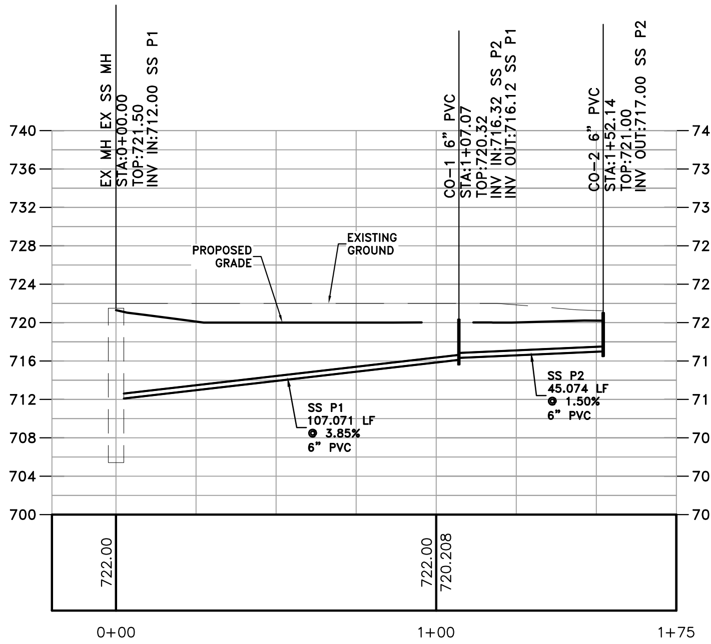
EX MH EX SS MH
STA:0+00.00
TOP:721.50
INV IN:712.00 SS P1
CO–1 6" PVC
STA:1+07.07
TOP:720.32
INV IN:716.32 SS P2
INV OUT:716.12 SS P1
CO–2 6" PVC
STA:1+52.14
TOP:721.00
INV OUT:717.00 SS P2
PROPOSED GRADE
EXISTING GROUND
SS P1 107.071 LF @ 3.85% 6" PVC
SS P2 45.074 LF @ 1.50% 6" PVC
740
736
732
728
724
720
716
712
708
704
700
722.00
722.00
720.208
0+00
1+00
1+75

SANITARY SEWER SERVICE
VERTICAL SCALE: 10.00
HORIZONTAL SCALE: 30.00

25-YEAR STORM

Line	ToLine	Line Lngth(ft)	Incr.Area (ac)	TotalArea (ac)	RunoffCoeff. (C)	IncrC x A	TotalC x A	InletTime (min)	TimeConc (min)	RnfallInt (in/hr)	TotalRunoff (cfs)	AdnlFlow (cfs)	TotalFlow (cfs)	CapacFull (cfs)	2 yr Veloc (ft/s)	25 yr Veloc (ft/s)	PipeSize (in)	PipeSlope (%)	Inv ElevDn (ft)	Inv ElevUp (ft)	HGLDn (ft)	HGLUp (ft)	Grnd/RimDn (ft)	Grnd/RimUp (ft)	Line ID
1	Outfall	92.24	0.66	1.75	0.95	0.63	1.53	5	7.1	7.8	11.9	0	11.9	71.25	3.69	4.81	24	8.46	701	708.8	708.92	710.04	711.11	717.83	P-A7
2	1	168.654	0.14	1.09	0.95	0.13	0.91	5	6.4	7.9	7.2	0	7.2	11.39	5.4	6.17	18	1	709.3	710.99	710.17	712.03	717.83	720.88	P-A6
3	2	101.833	0.3	0.95	0.95	0.29	0.77	5	6	8.1	6.25	0	6.25	11.39	4.28	4.99	18	1	710.99	712.01	712.03	712.98	720.88	717.56	P-A5
4	3	50.652	0.06	0.65	0.95	0.06	0.49	5	5.6	8.2	4	0	4	13.94	3.39	3.87	18	1.5	712.01	712.77	712.98	713.53	717.56	719.82	P-A4
5	4	31.136	0.06	0.59	0.95	0.06	0.43	5	5.3	8.3	3.56	0	3.56	13.83	3.62	4.09	18	1.48	712.77	713.23	713.53	713.95	719.82	719.83	P-A3
6	5	35.877	0.1	0.53	0.95	0.1	0.37	5	5	8.4	3.13	0	3.13	13.96	3.48	3.91	18	1.51	713.23	713.77	713.95	714.44	719.83	718.66	P-A2
7	6	38.209	0.43	0.43	0.65	0.28	0.28	3	3	8.4	2.34	0	2.34	20.98	3.02	3.38	18	3.4	713.77	715.07	714.44	715.65	718.66	718.07	P-A1
8	Outfall	111	0.1	0.1	0.35	0.04	0.04	0	0	0	0	4.69	4.69	21.6	1.94	3.66	18	3.6	694	698	696.62	698.83	702	697.08	P-B1

PROJECT NO.:
14137

DATE:
04/28/15

REVISIONS:

	DATE	DESCRIPTION
1	3/25/15	CITY SUB
2	4/01/15	OUTLET REV
3	4/27/15	2ND SUB CITY
4		
5		
6		

SOUTHLAND
ENGINEERING
CIVIL ENGINEERS - LAND SURVEYORS - LAND PLANNERS
114 OLD MILL ROAD., CARTERSVILLE, GA 30120 PH: 770.387.0440 FAX: 770.607.5151

BARTOW COUNTY
FIRE STATION #9
LOCATED IN LAND LOTS 856 & 857
4TH DISTRICT, 3RD SECTION
CARTERSVILLE, GEORGIA

KARL P. LUTJENS

SHEET TITLE:
STORM AND SANITARY SEWER PROFILES

SHEET NO.:
C601

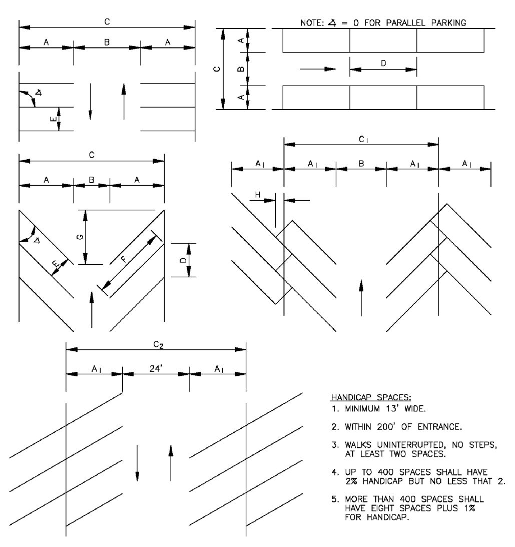
NOTE: ∡ = 0 FOR PARALLEL PARKING
A
B
C
D
E
F
G
H
A₁
C₁
C₂
24'

HANDICAP SPACES:
1. MINIMUM 13' WIDE.
2. WITHIN 200' OF ENTRANCE.
3. WALKS UNINTERRUPTED, NO STEPS, AT LEAST TWO SPACES.
4. UP TO 400 SPACES SHALL HAVE 2% HANDICAP BUT NO LESS THAT 2.
5. MORE THAN 400 SPACES SHALL HAVE EIGHT SPACES PLUS 1% FOR HANDICAP.

∡	A	B	A+B	C	D	E	F	G	H	A₁	C₁	C₂
ANGLE OF PARKING	DEPTH OF STALL	AISLE WIDTH	---	WIDTH OF BAY	CURB LENGTH	WIDTH OF STALL	LENGTH OF STRIPE	WASTE SPACE	DEPTH OF OVERHANG	DEPTH OF STALL	WIDTH OF AREA	WIDTH OF AREA
0°	9.0	12.0	21.0	30.0	22.0	---	---	---	---	---	---	42.0
45°	19.1	13.0	32.1	51.2	12.7	9.0	27.0	19.1	3.2	15.9	44.8	55.8
60°	20.1	18.0	38.1	58.2	10.4	9.0	23.2	11.6	2.3	17.8	53.6	59.6
90°	18.0	24.0	42.0	60.0	9.0	9.0	---	---	---	---	---	60.0

CITY OF CARTERSVILLE
DEPARTMENT OF PUBLIC WORKS

OFFSTREET PARKING
CONSTRUCTION STANDARD

DATE: MAR. '96
APPROVED:
STANDARD NO. 3.8.10a

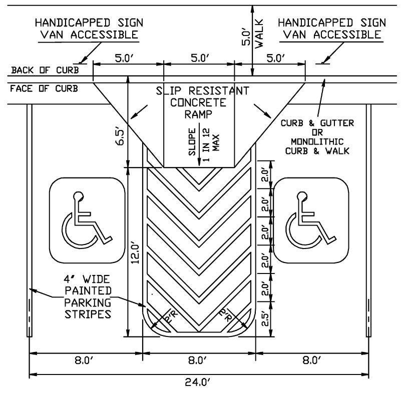
HANDICAPPED SIGN VAN ACCESSIBLE
HANDICAPPED SIGN VAN ACCESSIBLE
BACK OF CURB
FACE OF CURB
5.0'
5.0'
5.0'
5.0' WALK
SLIP RESISTANT CONCRETE RAMP
SLOPE 1 IN 12 MAX
CURB & GUTTER OR MONOLITHIC CURB & WALK
6.5'
12.0'
2.5'
4' WIDE PAINTED PARKING STRIPES
8.0'
8.0'
8.0'
24.0'

HANDICAPPED RAMP AND VAN ACCESSIBLE HANDICAPPED PARKING

CITY OF CARTERSVILLE
DEPARTMENT OF PUBLIC WORKS

OFFSTREET PARKING
CONSTRUCTION STANDARD

DATE: MAR. '96
APPROVED:
STANDARD NO. 3.8.10b

NOTE:

IF CONCRETE PAVEMENT, REPLACE WITH ORIGINAL THICKNESS (MINIMUM 8"), FLUSH WITH EXISTING PAVEMENT.

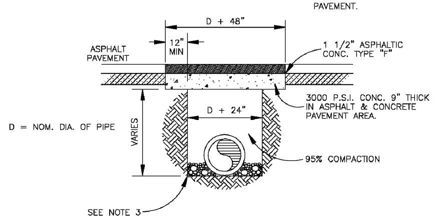
D + 48"
12" MIN
ASPHALT PAVEMENT
1 1/2" ASPHALTIC CONC. TYPE "F"
3000 P.S.I. CONC. 9" THICK IN ASPHALT & CONCRETE PAVEMENT AREA.
D + 24"
D = NOM. DIA. OF PIPE
VARIES
95% COMPACTION
SEE NOTE 3

NOTE: PERMIT REQUIRED FOR ALL STREET CUTS

TYPICAL PAVEMENT REPAIR

NOTES:
1. PERMISSION MUST BE OBTAINED TO OPEN CUT EXISTING ROADS.
2. ROADWAYS WILL GENERALLY BE BORED OR TUNNELED FROM DITCH LINE TO DITCH LINE.
3. BED AS PER APPLICABLE UTILITY SPECIFICATION.

CITY OF CARTERSVILLE
DEPARTMENT OF PUBLIC WORKS

TYPICAL STREET CUT REPAIR
CONSTRUCTION STANDARD

DATE: APR. '96
APPROVED:
STANDARD NO. 3.8.11

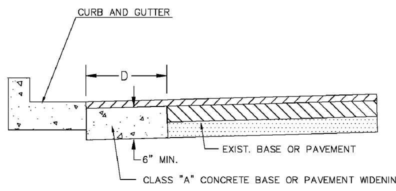
CURB AND GUTTER
D
6" MIN.
EXIST. BASE OR PAVEMENT
CLASS "A" CONCRETE BASE OR PAVEMENT WIDENING

NOTE: IN EXCAVATED AREAS WHERE D = 2'–0" OR LESS IN WIDTH BETWEEN THE EXISTING PAVING AND NEW CURB AND GUTTER, CLASS "A" CONCRETE WILL BE PLACED IN LIEU OF THE BASE AND PAVING SPECIFIED BY THE TYPICAL SECTION.

IN EXCAVATED AREAS FROM WHERE D IS FROM 2'–0" TO 5'–0" IN WIDTH THE DEVELOPER MAY PLACE CLASS "A" CONCRETE IN LIEU OF THE BASE AND PAVING

IN EXCAVATED AREAS WHERE D IS GREATER THAN 5'–0" IN WIDTH THE DEVELOPER SHALL PLACE BASE AND PAVING AS SPECIFIED ON THE TYPICAL SECTION.

CLASS "A" CONCRETE IS AS DEFINED BY THE GEORGIA DOT.

CITY OF CARTERSVILLE
PUBLIC WORKS

PAVEMENT WIDENING
CONSTRUCTION STANDARD

DATE: MAR. '95
APPROVED:
STANDARD NO. 3.8.04

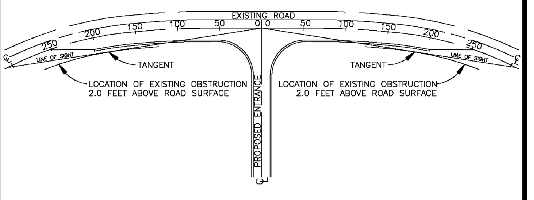
EXISTING ROAD
250
200
150
100
50
0
TANGENT
TANGENT
LOCATION OF EXISTING OBSTRUCTION 2.0 FEET ABOVE ROAD SURFACE
LOCATION OF EXISTING OBSTRUCTION 2.0 FEET ABOVE ROAD SURFACE
PROPOSED ENTRANCE

HORIZONTAL PLAN

HORIZONTAL SIGHT DISTANCE:

THE SIGHT DISTANCE AT DEVELOPMENT ENTRANCES IS DETERMINED BY THE LINE OF SIGHT AVAILABLE 2.0 FEET ABOVE THE ROAD SURFACE. THE SIGHT DISTANCE IS MEASURED ALONG THE EXISTING EDGE OF PAVEMENT BEGINNING AT THE CENTERLINE OF THE PROPOSED ENTRANCE AND ENDING WHERE THE PROJECTED LINE OF SIGHT INTERSECTS THE PAVEMENT. THE LINE OF SIGHT IS THE PROJECTED LINE OF VISIBILITY BEGINNING AT THE ENTRANCE CENTERLINE AND TANGENT TO AN OBSTRUCTION 2.0 FEET ABOVE THE ROAD SURFACE. EXAMPLES OF OBSTRUCTIONS ARE VEGETATION, GROUND COVER, SIGNS, EXISTING TOPOGRAPHY, ETC.

SPEED LIMIT (M.P.H.)	MINIMUM STOPPING SIGHT DISTANCE (FT.)
25	160
30	200
35	250
40	325
45	400
50	475
55	550

CITY OF CARTERSVILLE
DEPARTMENT OF PUBLIC WORKS

DEVELOPMENT ENTRANCE–SIGHT DISTANCE
CONSTRUCTION STANDARD

DATE: MAR. '96
APPROVED:
STANDARD NO. 3.8.07

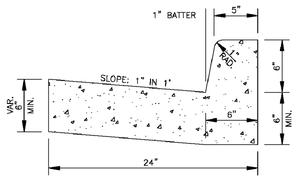
1" BATTER
5"
R=1"
SLOPE: 1" IN 1'
VAR.
6"
6" MIN.
24"

VERTICAL CURB

NOTE:
1. VERTICAL CURB SHALL COMPLY WITH GEORGIA STANDARD 9032B, 6" x 24", TYPE 2.
2. 1/2" PREFORMED EXPANSION JOINTS WILL BE REQUIRED AT TANGENT POINTS OF RADIUS RETURNS, AT DRIVEWAYS, AND STREET INTERSECTIONS AND AT 40' INTERVALS ALONG THE CURB.

CITY OF CARTERSVILLE
DEPARTMENT OF PUBLIC WORKS

CURB DETAIL
CONSTRUCTION STANDARD

DATE: MAR. '96
APPROVED:
STANDARD NO. 3.8.09

NOTES:
1) OPERATOR PAD DEPTH TO BE MINIMUM OF 24" AND IN ACCORDANCE WITH ALL LOCAL CODES AND SOIL CONDITIONS.

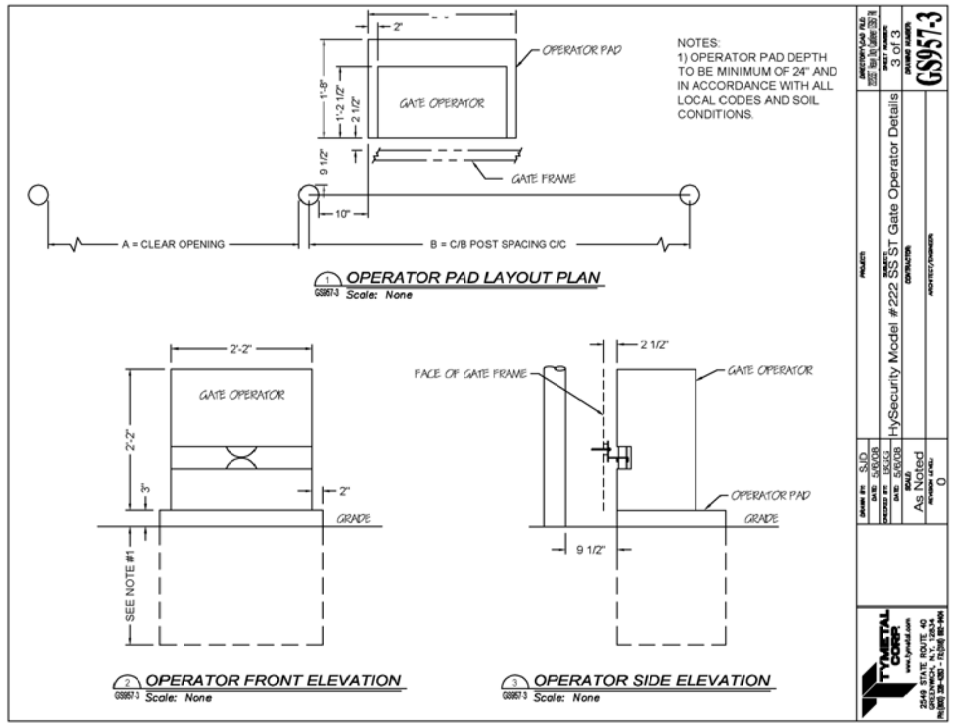
2'
OPERATOR PAD
GATE OPERATOR
1'-8"
1'-2 1/2"
9 1/2"
GATE FRAME
10"
A = CLEAR OPENING
B = C/B POST SPACING C/C
OPERATOR PAD LAYOUT PLAN
Scale: None
2'-2"
GATE OPERATOR
2'-2"
3"
2"
GRADE
SEE NOTE #1
OPERATOR FRONT ELEVATION
Scale: None
2 1/2"
FACE OF GATE FRAME
GATE OPERATOR
OPERATOR PAD
GRADE
9 1/2"
OPERATOR SIDE ELEVATION
Scale: None
HySecurity Model #222 SS ST Gate Operator Details
As Noted
3 of 3
GS957-3
TYMETAL CORP.

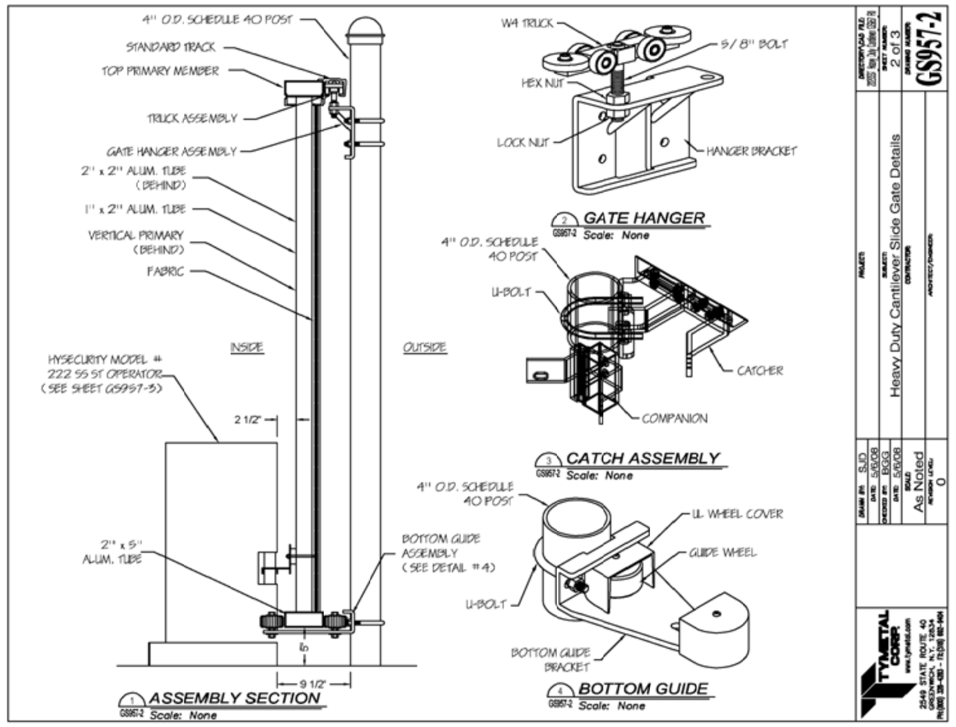
4" O.D. SCHEDULE 40 POST
STANDARD TRACK
TOP PRIMARY MEMBER
TRUCK ASSEMBLY
GATE HANGER ASSEMBLY
2" x 2" ALUM. TUBE (BEHIND)
1" x 2" ALUM. TUBE
VERTICAL PRIMARY (BEHIND)
FABRIC
HYSECURITY MODEL # 222 SS ST OPERATOR (SEE SHEET GS957-3)
INSIDE
OUTSIDE
21 1/2"
2" x 5" ALUM. TUBE
9 1/2"
ASSEMBLY SECTION
Scale: None
W4 TRUCK
5/8" BOLT
HEX NUT
LOCK NUT
HANGER BRACKET
GATE HANGER
Scale: None
4" O.D. SCHEDULE 40 POST
U-BOLT
CATCHER
COMPANION
CATCH ASSEMBLY
Scale: None
4" O.D. SCHEDULE 40 POST
BOTTOM GUIDE ASSEMBLY (SEE DETAIL #4)
UL WHEEL COVER
GUIDE WHEEL
U-BOLT
BOTTOM GUIDE BRACKET
BOTTOM GUIDE
Scale: None
Heavy Duty Cantilever Slide Gate Details
As Noted
2 of 3
GS957-2
TYMETAL CORP.

NOTE: ADEQUATE SIGHT DISTANCE EXISTS FOR BOTH ENTRANCES.

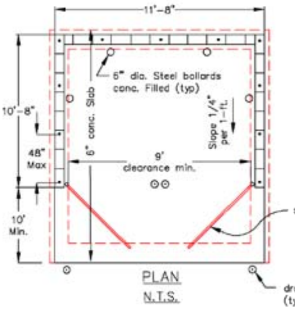
11'-8"
6" dia. Steel bollards conc. Filled (typ)
6" conc. Slab
Slope 1/4" per 1-ft.
10'-8"
48" Max
9' clearance min.
10' Min.
swing gate (typ.)
drop pin hole (typ.)

PLAN
N.T.S.

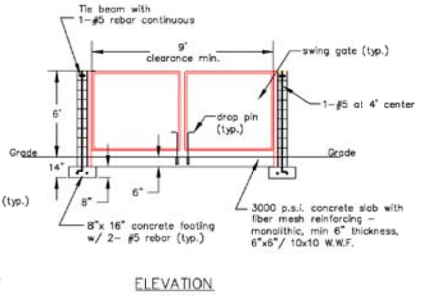
Tie beam with 1-#5 rebar continuous
9' clearance min.
swing gate (typ.)
1-#5 at 4' center
6'
drop pin (typ.)
Grade
Grade
14"
6"
8"
8"x 16" concrete footing w/ 2- #5 rebar (typ.)
3000 p.s.i. concrete slab with fiber mesh reinforcing – monolithic, min 6" thickness, 6"x6"/ 10x10 W.W.F.

ELEVATION
N.T.S.

CITY OF CARTERSVILLE
PUBLIC WORKS

DATE	DESCRIPTION	APP.
DATE 4/07	DUMPSTER ENCLOSURE	
DRAWN BY	SINGLE	3.8.26c

NOTES:

1.) WALLS

a.) New construction: maximum 6'–0' high and constructed of concrete block (8"x8"x16"). Materials used shall be consistent with those used in the construction of and architectural style of the principal building.

b.) Existing: maximum 6'–0' high replacement materials can be made of the same materials as long as they are made of approved opaque material.

2.) FOOTINGS
8"x16" concrete w/2– #5 continuous rebar imbedded.

3.) CONCRETE SLAB
Monolithic, min. 6" thickness w/imbedded 6"x6"/ 10x10 welded wire fabric (W.W.F.), 3000 P.S.I. with fiber mesh reinforcing.

4.) CONCRETE FILLED CELLS
With 1–#5 vertical rebar tied to footer steel at each corner and every 4' O.C.

5.) GATES
Constructed of min. 1–1/2" diameter galvanized tubular steel w/privacy–type slats inserted in galvanized steel mesh fabric, hinge–mounted on min. 3" diameter galvanized steel post. (Gates and post constructed and installed per applicable building code by licensed fence contractor).

6.) DROP PIN
1/2" dia. 18" long metal rod gate latch. Provide 3/4" dia. hole 6" into concrete for rods. In asphalt provide a 3/4" P.V.C. sleeve, 6" long, or equal.

7.) SOIL
Soil bearing capacity to be at least 2,500 P.S.F.

8.) BOLLARD
3'–6" high, 6" diameter steel pipe bollard filled with concrete, painted traffic yellow, imbedded 3'–0" deep in 18" concrete foundation. (See Detail)

CONCRETE MASONRY WALL CONSTRUCTION

Materials, construction and quantity control of masonry shall be in accordance with Uniform Building Code (UBC), Chapter 24. General conditions and construction requirements shall be applied as specified in UBC, Section 2404 (f), during grouted masonry work.

1. All reinforcing steel shall be deformed bars conforming to ASTM A–615, Grade 60. Vertical reinforcement shall be placed in the center of the masonry cell, and shall be held in position at the top and bottom.

2. If a slab dowel does not line–up with a vertical core, it shall not be sloped more than one horizontal in six verticals (1:6).

3. Horizontal wall reinforcement shall be standard truss type DUR–O–WALL (or equivalent) at 16° o.c..

4. Hollow Load–bearing Concrete Masonry Units shall be normal weight conforming to ASTM C–90, with a minimum compressive strength of 1,900 PSI.

5. Mortar shall be type M or S, in accordance with ASTM C–270. Place all masonry in running bond with 3/8" mortar joints. Provide complete coverage face shell mortar bedding, horizontal and vertical.

6. Coarse grout shall conform to ASTM C–476, with a maximum aggregate size of 3/8", 8" to 10" slump, and a minimum compressive strength of 2,500 PSI at 28 days.

7. Minimum 3" X 3" clean–out holes (saw–cut) are required at the bottom course of all cells to verify grout placement. Clean–outs shall be sealed after masonry inspection–provided in accordance with ACI 531–4.6, and before grouting.

8. Prior to grouting, the grout space shall be clean, with no mortar projections greater the ½", mortar droppings or other foreign material. All cells shall be in vertical alignment, and shall solidly be filled with coarse grout as specified.

9. During placing, grout shall be consolidated with flexible cable vibrator. First grout pour shall be stopped a minimum of 1 – 1/2" below the top of the middle bond beam masonry.

CITY OF CARTERSVILLE
PUBLIC WORKS

DATE	DESCRIPTION	APP.
DATE 4/07	DUMPSTER ENCLOSURE	
DRAWN BY	NOTES	3.8.26c

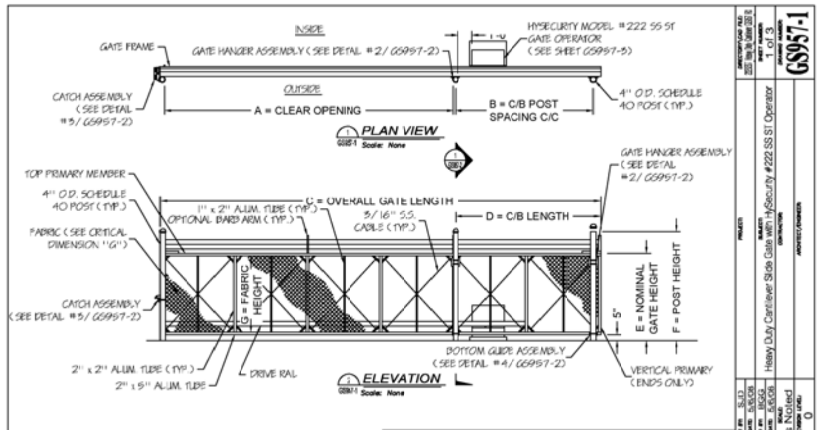
INSIDE
OUTSIDE
GATE FRAME
GATE HANGER ASSEMBLY (SEE DETAIL #2/ GS957-2)
HYSECURITY MODEL #222 SS ST GATE OPERATOR (SEE SHEET GS957-3)
CATCH ASSEMBLY (SEE DETAIL #3/ GS957-2)
A = CLEAR OPENING
B = C/B POST SPACING C/C
4" O.D. SCHEDULE 40 POST (TYP.)
PLAN VIEW
Scale: None
TOP PRIMARY MEMBER
4" O.D. SCHEDULE 40 POST (TYP.)
C = OVERALL GATE LENGTH
D = C/B LENGTH
1" x 2" ALUM. TUBE (TYP.)
OPTIONAL BARB ARM (TYP.)
5/16" S.S. CABLE (TYP.)
GATE HANGER ASSEMBLY (SEE DETAIL #2/ GS957-2)
FABRIC (SEE CRITICAL DIMENSION "G")
CATCH ASSEMBLY (SEE DETAIL #3/ GS957-2)
G = FABRIC HEIGHT
E = NOMINAL GATE HEIGHT
F = POST HEIGHT
5'
BOTTOM GUIDE ASSEMBLY (SEE DETAIL #4/ GS957-2)
2" x 2" ALUM. TUBE (TYP.)
2" x 5" ALUM. TUBE
DRIVE RAIL
VERTICAL PRIMARY (ENDS ONLY)
ELEVATION
Scale: None
Heavy Duty Cantilever Slide Gate with HySecurity #222 SS ST Operator
As Noted
1 of 3
GS957-1
TYMETAL CORP.

NOTES:
1. ALL FITTINGS PROVIDED FOR 4" O.D. SCHEDULE 40 POSTS. OTHER SIZES AVAILABLE UPON REQUEST.
2. GATE ELEVATION IS VIEWED FROM THE OUTSIDE OF THE SECURE AREA LOOKING IN.
3. THIS GENERIC DRAWING SHOWS TYPICAL GATE. GATE MANUFACTURED MAY NOT BE EXACTLY AS SHOWN.

NOMINAL GATE SIZE
24'x6' +1

CRITICAL DIMENSION CHART		
A	CLEAR OPENING	24'-0"
B	COUNTERBALANCE POST SPACING C/C	11'-1"
C	OVERALL GATE LENGTH	36'-0"
D	COUNTERBALANCE LENGTH	12'-0"
E	NOMINAL GATE HEIGHT	6'-0"
F	POST HEIGHT	7'-6"
G	FABRIC HEIGHT	5'-0"

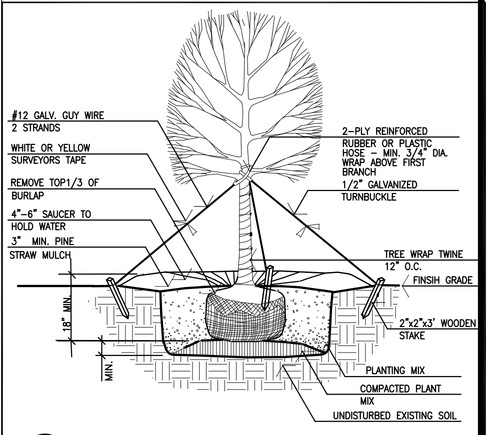
#12 GALV. GUY WIRE 2 STRANDS
WHITE OR YELLOW SURVEYORS TAPE
REMOVE TOP1/3 OF BURLAP
4"–6" SAUCER TO HOLD WATER
3" MIN. PINE STRAW MULCH
2–PLY REINFORCED RUBBER OR PLASTIC HOSE – MIN. 3/4" DIA. WRAP ABOVE FIRST BRANCH
1/2" GALVANIZED TURNBUCKLE
TREE WRAP TWINE 12" O.C.
FINSIH GRADE
2"x2"x3' WOODEN STAKE
18" MIN.
MIN.
PLANTING MIX
COMPACTED PLANT MIX
UNDISTURBED EXISTING SOIL

① TREE PLANTING DETAIL
NTS

PROJECT NO.: 14137

DATE: 04/28/15

REVISIONS:	DATE	DESCRIPTION
1	3/25/15	CITY SUB
2	4/01/15	OUTLET REV
3	4/27/15	2ND SUB CITY
4		
5		
6		

SOUTHLAND ENGINEERING
CIVIL ENGINEERS - LAND SURVEYORS - LAND PLANNERS
114 OLD MILL ROAD., CARTERSVILLE, GA 30120
PH: 770.387.0440 FAX: 770.607.5151

BARTOW COUNTY
FIRE STATION #9
LOCATED IN LAND LOTS 856 & 857
4TH DISTRICT, 3RD SECTION
CARTERSVILLE, GEORGIA

No. 28430
KARL P. LUTJENS

SHEET TITLE:
CONSTRUCTION DETAILS

SHEET NO.:
C701

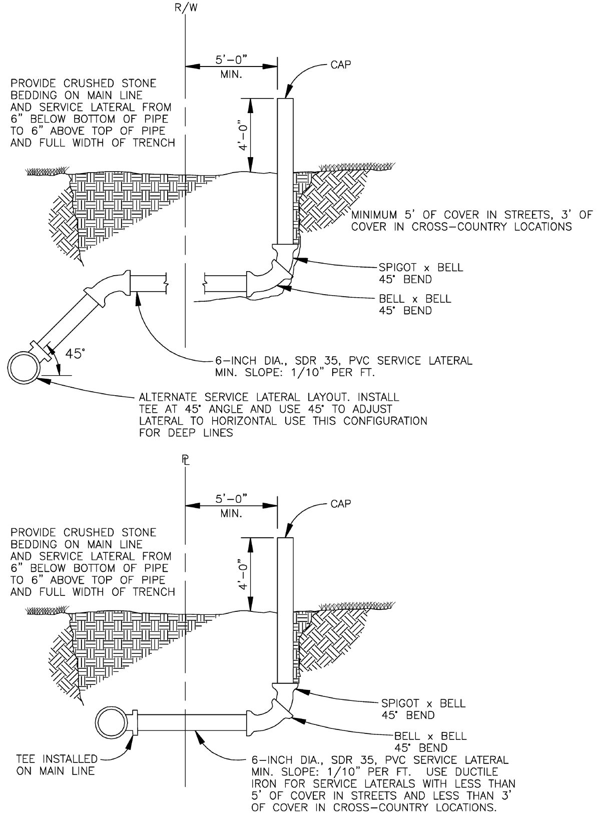
℄ R/W
5'-0" MIN.
CAP
4'-0"
PROVIDE CRUSHED STONE BEDDING ON MAIN LINE AND SERVICE LATERAL FROM 6" BELOW BOTTOM OF PIPE TO 6" ABOVE TOP OF PIPE AND FULL WIDTH OF TRENCH
MINIMUM 5' OF COVER IN STREETS, 3' OF COVER IN CROSS-COUNTRY LOCATIONS
SPIGOT x BELL 45° BEND
BELL x BELL 45° BEND
45°
6-INCH DIA., SDR 35, PVC SERVICE LATERAL MIN. SLOPE: 1/10" PER FT.
ALTERNATE SERVICE LATERAL LAYOUT. INSTALL TEE AT 45° ANGLE AND USE 45° TO ADJUST LATERAL TO HORIZONTAL USE THIS CONFIGURATION FOR DEEP LINES
℄
5'-0" MIN.
CAP
4'-0"
PROVIDE CRUSHED STONE BEDDING ON MAIN LINE AND SERVICE LATERAL FROM 6" BELOW BOTTOM OF PIPE TO 6" ABOVE TOP OF PIPE AND FULL WIDTH OF TRENCH
SPIGOT x BELL 45° BEND
BELL x BELL 45° BEND
TEE INSTALLED ON MAIN LINE
6-INCH DIA., SDR 35, PVC SERVICE LATERAL MIN. SLOPE: 1/10" PER FT. USE DUCTILE IRON FOR SERVICE LATERALS WITH LESS THAN 5' OF COVER IN STREETS AND LESS THAN 3' OF COVER IN CROSS-COUNTRY LOCATIONS.

CITY OF CARTERSVILLE SEWER SPECIFICATIONS	SEWER SERVICE LATERAL STANDARD DETAIL	DATE:	MAR. '96	STANDARD NO. 4.6.06
		APPROVED:		

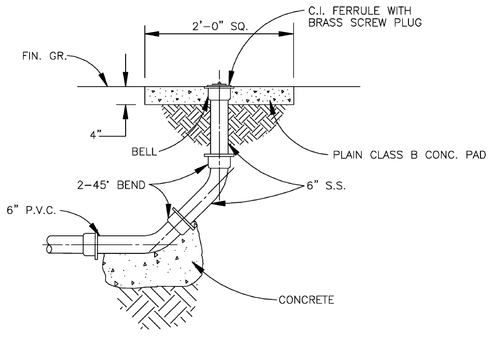
2'-0" SQ.
C.I. FERRULE WITH BRASS SCREW PLUG
FIN. GR.
4"
BELL
PLAIN CLASS B CONC. PAD
2-45° BEND
6" S.S.
6" P.V.C.
CONCRETE

CLEANOUT DETAIL

CITY OF CARTERSVILLE WATER DEPARTMENT	CLEANOUT DETAIL (COMMERCIAL OR PAVED AREAS) CONSTRUCTION STANDARD	DATE:	MAR. '96	STANDARD NO. 4.6.05
		APPROVED:		

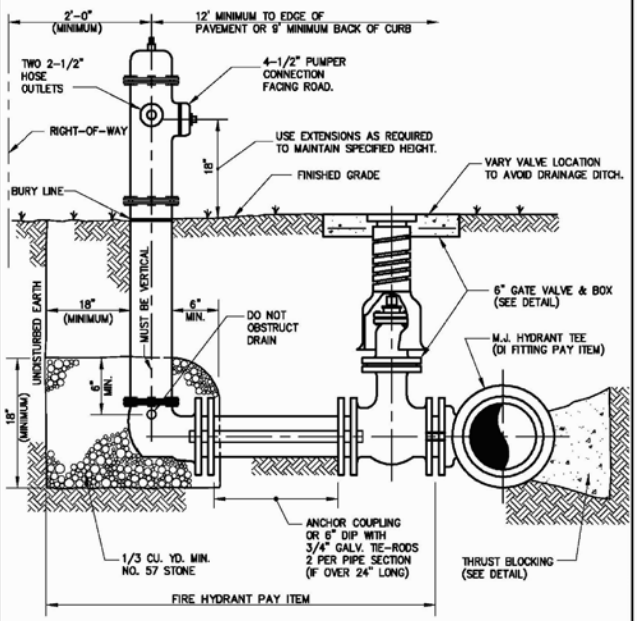
2'-0" (MINIMUM)
12' MINIMUM TO EDGE OF PAVEMENT OR 9' MINIMUM BACK OF CURB
TWO 2-1/2" HOSE OUTLETS
4-1/2" PUMPER CONNECTION FACING ROAD.
RIGHT-OF-WAY
USE EXTENSIONS AS REQUIRED TO MAINTAIN SPECIFIED HEIGHT.
18"
FINISHED GRADE
VARY VALVE LOCATION TO AVOID DRAINAGE DITCH.
BURY LINE
UNDISTURBED EARTH
MUST BE VERTICAL
18" (MINIMUM)
6" MIN.
DO NOT OBSTRUCT DRAIN
6" GATE VALVE & BOX (SEE DETAIL)
M.J. HYDRANT TEE (DI FITTING PAY ITEM)
18" (MINIMUM)
6" MIN.
ANCHOR COUPLING OR 6" DIP WITH 3/4" GALV. TIE-RODS 2 PER PIPE SECTION (IF OVER 24" LONG)
1/3 CU. YD. MIN. NO. 57 STONE
THRUST BLOCKING (SEE DETAIL)
FIRE HYDRANT PAY ITEM

NO.	DATE	BY	REVISION
2	12/20/03	DLJ	REVISED DIMENSIONS
1	03/7/01	DVK	REVISED NOTES

BARTOW COUNTY, GEORGIA
BARTOW COUNTY WATER SYSTEM
TELEPHONE (770) 387-5170

WATER DETAILS
FIRE HYDRANT

DRAWN BY: DJH	SCALE: NTS	DATE: NOVEMBER 15, 1996	DWG. NO.: WAT-4

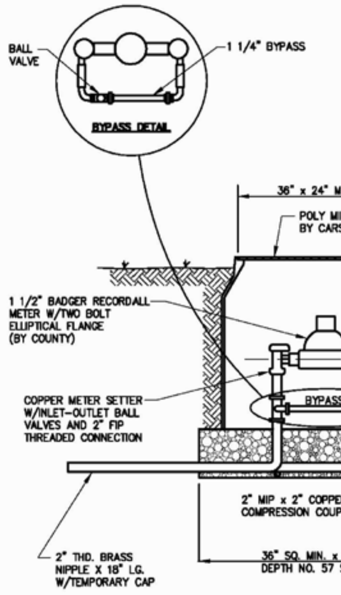
BALL VALVE
1 1/4" BYPASS
BYPASS DETAIL
36" x 24" MIN. LID
POLY MINI-VAULT BY CARSON
TOP OF VAULT 1" ABOVE FINISHED GRADE
1 1/2" BADGER RECORDALL METER W/TWO BOLT ELLIPTICAL FLANGE (BY COUNTY)
15"
30" MIN.
℄
COPPER METER SETTER W/INLET-OUTLET BALL VALVES AND 2" FIP THREADED CONNECTION
BYPASS
2" MIP x 2" COPPER COMPRESSION COUPLING
2" THD. BRASS NIPPLE X 18" LG. W/TEMPORARY CAP
36" SQ. MIN. x 6" MIN. DEPTH NO. 57 STONE
2" COPPER FROM 2" GATE VALVE AT WATERMAIN

BARTOW COUNTY, GEORGIA
BARTOW COUNTY WATER SYSTEM
TELEPHONE (770) 387-5170

WATER DETAILS
1-1/2" & 2" METER AND VAULT

DRAWN BY: DL	SCALE: NTS	DATE: DEC. 6, 2001	DWG. NO.: WAT-5A

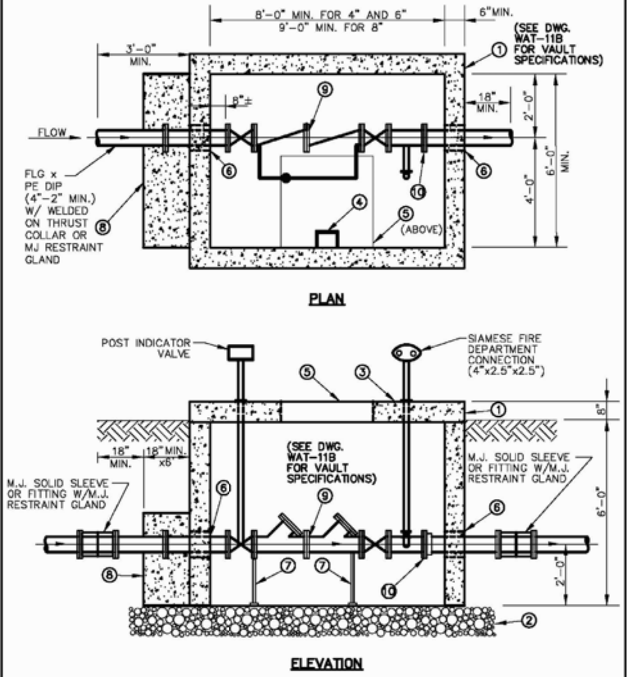
8'-0" MIN. FOR 4" AND 6"
9'-0" MIN. FOR 8"
6" MIN.
3'-0" MIN.
(SEE DWG. WAT-11B FOR VAULT SPECIFICATIONS)
①
⑨
8"±
18" MIN.
2'-0"
6'-0" MIN.
4'-0"
FLOW
⑥
⑥
⑩
④
⑤ (ABOVE)
FLG x PE DIP (4"-2" MIN.) W/ WELDED ON THRUST COLLAR OR MJ RESTRAINT GLAND
⑧
PLAN
POST INDICATOR VALVE
SIAMESE FIRE DEPARTMENT CONNECTION (4"x2.5"x2.5")
⑤
③
①
8"
18" MIN.
18" MIN. x6"
(SEE DWG. WAT-11B FOR VAULT SPECIFICATIONS)
M.J. SOLID SLEEVE OR FITTING W/M.J. RESTRAINT GLAND
M.J. SOLID SLEEVE OR FITTING W/M.J. RESTRAINT GLAND
⑥
⑨
⑥
6'-0"
⑧
⑦
⑦
⑩
2'-0"
②
ELEVATION

BARTOW COUNTY, GEORGIA
BARTOW COUNTY WATER SYSTEM
TELEPHONE (770) 387-5170

WATER DETAILS
4"-8" DOUBLE CHECK DETECTOR
ASSEMBLY & FIRE CONNECTION

DRAWN BY: DVK	SCALE: NTS	DATE: DEC. 20, 2003	DWG. NO.: WAT-11A

VAULT SPECIFICATIONS

1. VAULT SHALL BE PRECAST REINFORCED CONCRETE WITH A MINIMUM WALL THICKNESS OF 6".
2. 12" OF NO. 57 COMPACTED STONE.
3. VAULT TOP SHALL BE 8" MINIMUM REINFORCED CONCRETE WITH 36"x36" ACCESS OPENING OFFSET TO ONE SIDE.
4. ALUMINUM ACCESS LADDER DOWELED TO WALL OR MANHOLE STEPS CENTERED AT ACCESS OPENING.
5. HATCH COVER 36"x36" BILCO-ALUMINUM SINGLE MODEL J-4AL OR EQUIVALENT.
6. VAULT INLET/OUTLET PIPE OPENINGS TO BE SEALED WITH GROUT OR MORTAR, PIPE MUST NOT SUPPORT VAULT.
7. BFP DEVICES TO BE SUPPORTED AT TWO POINTS WITH PIPE STAND OR SOLID MASONARY SUPPORT.
8. THRUST BLOCKING.
9. 4" TO 8" DOUBLE CHECK DETECTOR ASSEMBLY (WATTS REGULATOR SERIES 709DCDA-OSY-GPM BADGER METER).
10. RESTRAINED FLANGE ADAPTER, SERIES 2100 MEGAFLANGE BY EBAA IRON, INC. OR APPROVED EQUAL.
11. DEVICE TESTING: ALL DCD ASSEMBLIES SHALL BE TESTED AT TIME OF INSTALLATION AND AT LEAST ANNUALLY THERE AFTER BY AN APPROVED AND CERTIFIED TESTING SERVICE AND COPY OF TEST SUBMITTED TO BARTOW COUNTY WATER DEPARTMENT.
12. THRUST TIE RODS IF USED SHALL BE GALVANIZED AND ALL PIPE AND FITTING OF DUCTILE IRON.
13. VAULT TO BE INSTALLED ON OWNER'S PRIVATE PROPERTY, PROVIDE FOR A 15'x30' EASEMENT AND/OR RIGHT OF ENTRY CLAUSE.
14. ALL MATERIALS TO BE FURNISHED AND INSTALLED BY THE CUSTOMER/OWNER.

BARTOW COUNTY, GEORGIA
BARTOW COUNTY WATER SYSTEM
TELEPHONE (770) 387-5170

WATER DETAILS
4"-8" DOUBLE CHECK DETECTOR
ASSEMBLY & FIRE CONNECTION NOTES

DRAWN BY: DVK	SCALE: NTS	DATE: DEC. 20, 2003	DWG. NO.: WAT-11B

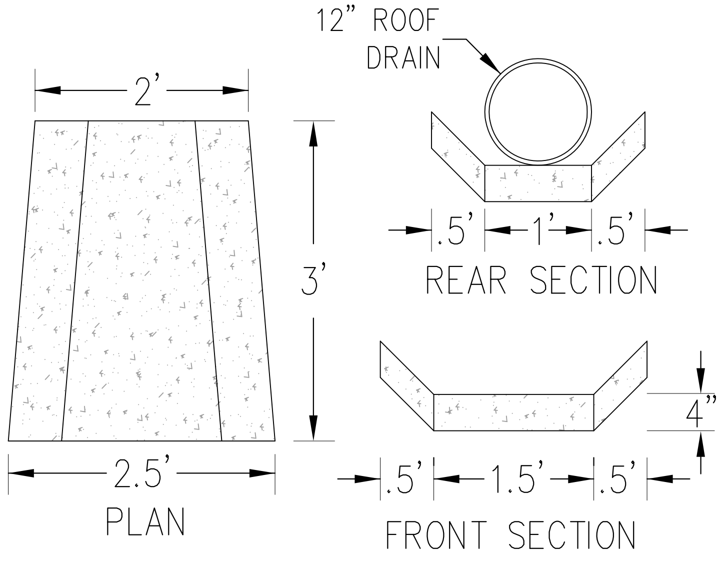
12" ROOF DRAIN
2'
3'
2.5'
PLAN
.5' 1' .5'
REAR SECTION
4"
.5' 1.5' .5'
FRONT SECTION

CONCRETE SPLASH PAD
NTS

PROJECT NO.: 14137

DATE: 04/28/15

REVISIONS:

	DATE	DESCRIPTION
1	3/25/15	CITY SUB
2	4/01/15	OUTLET REV
3	4/27/15	2ND SUB CIT
4		
5		
6		

SOUTHLAND ENGINEERING
CIVIL ENGINEERS - LAND SURVEYORS - LAND PLANNERS
114 OLD MILL ROAD., CARTERSVILLE, GA 30120 PH: 770.387.0440 FAX: 770.607.5151

BARTOW COUNTY
FIRE STATION #9
LOCATED IN LAND LOTS 856 & 857
4TH DISTRICT, 3RD SECTION
CARTERSVILLE, GEORGIA

KARL P. LUTJENS

SHEET TITLE:
CONSTRUCTION DETAILS

SHEET NO.:
C702

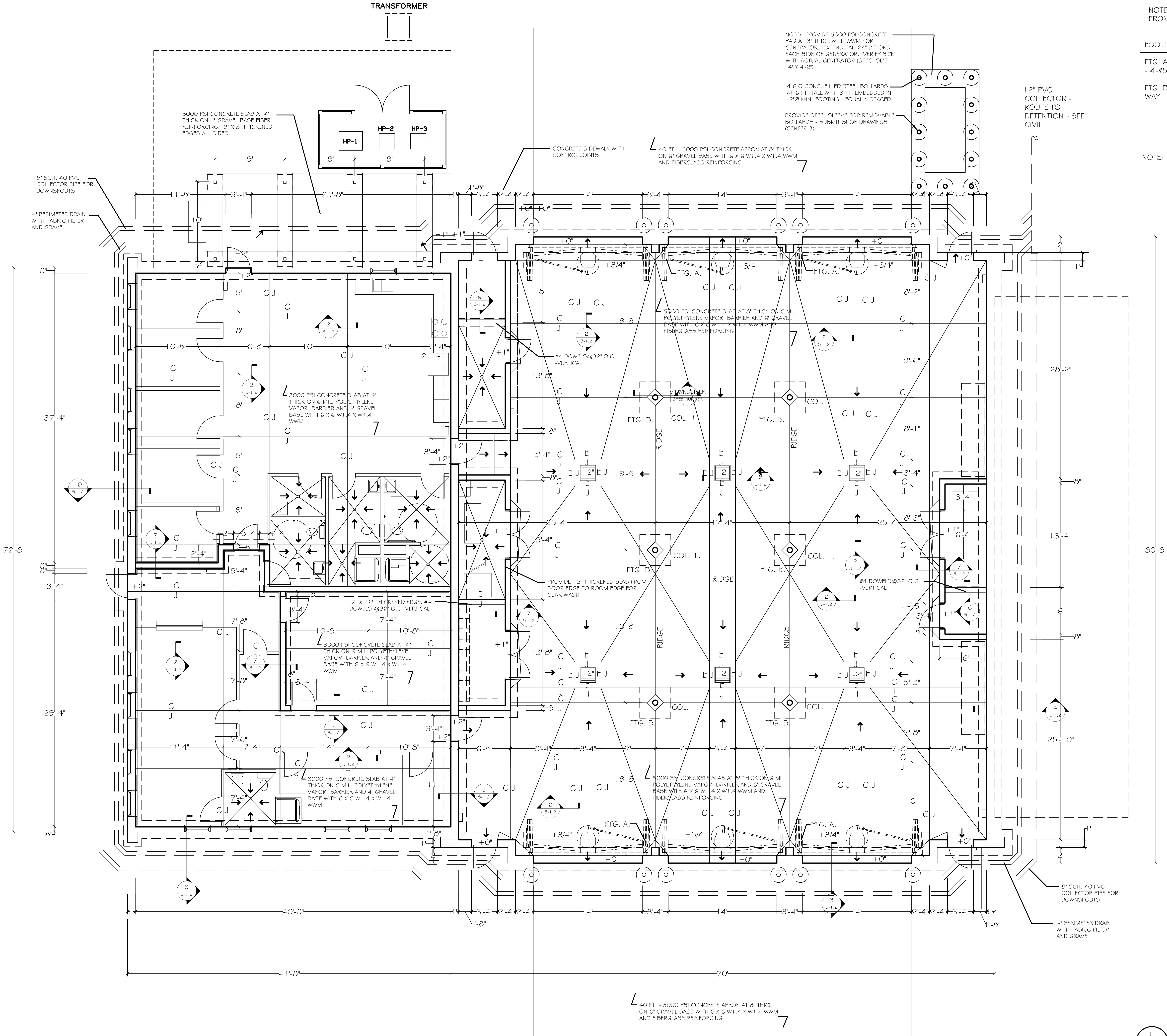
TRANSFORMER
HP-1
HP-2
HP-3
3000 PSI CONCRETE SLAB AT 4" THICK ON 4" GRAVEL BASE FIBER REINFORCING. 8" X 8" THICKENED EDGES ALL SIDES.
8" SCH. 40 PVC COLLECTOR PIPE FOR DOWNSPOUTS
4" PERIMETER DRAIN WITH FABRIC FILTER AND GRAVEL
CONCRETE SIDEWALK WITH CONTROL JOINTS
40 FT. - 5000 PSI CONCRETE APRON AT 8" THICK ON 6" GRAVEL BASE WITH 6 X 6 W1.4 X W1.4 WWM AND FIBERGLASS REINFORCING
NOTE: PROVIDE 5000 PSI CONCRETE PAD AT 8" THICK WITH WWM FOR GENERATOR. EXTEND PAD 24" BEYOND EACH SIDE OF GENERATOR. VERIFY SIZE WITH ACTUAL GENERATOR (SPEC. SIZE - 14' X 4'-2")
4-6"Ø CONC. FILLED STEEL BOLLARDS AT 6 FT. TALL WITH 3 FT. EMBEDDED IN 12"Ø MIN. FOOTING - EQUALLY SPACED
PROVIDE STEEL SLEEVE FOR REMOVABLE BOLLARDS - SUBMIT SHOP DRAWINGS (CENTER 3)
12" PVC COLLECTOR - ROUTE TO DETENTION - SEE CIVIL
5000 PSI CONCRETE SLAB AT 8" THICK ON 6 MIL. POLYETHYLENE VAPOR BARRIER AND 6" GRAVEL BASE WITH 6 X 6 W1.4 X W1.4 WWM AND FIBERGLASS REINFORCING
3000 PSI CONCRETE SLAB AT 4" THICK ON 6 MIL. POLYETHYLENE VAPOR BARRIER AND 4" GRAVEL BASE WITH 6 X 6 W1.4 X W1.4 WWM
#4 DOWELS@32" O.C. -VERTICAL
12" X 12" THICKENED EDGE. #4 DOWELS @32" O.C.-VERTICAL
PROVIDE 12" THICKENED SLAB FROM DOOR EDGE TO ROOM EDGE FOR GEAR WASH
FTG. A.
FTG. B.
COL. 1.
RIDGE
CJ
EJ
2 S-1.2
3 S-1.2
4 S-1.2
5 S-1.2
6 S-1.2
7 S-1.2
8 S-1.2
10 S-1.2
72'-8"
37'-4"
29'-4"
80'-8"
40'-8"
41'-8"
70'
25'-8"
14'
3'-4"
2'-4"
1'-8"
19'-8"
13'-8"
25'-4"
17'-4"
28'-2"
13'-4"
25'-10"
+3/4"
+0"
+1"
+2"

1
S-1.1
FOUNDATION PLAN
SCALE 3/16" = 1'-0"

N

NOTE: SLOPE ALL CONCRETE ADJACENT BUILDING AWAY FROM BUILDING AT 2% SLOPE - TYPICAL.

FOOTING SCHEDULE

FTG. A - 3'-4" X 12" EXTENDED FROM PERIMETER FOOTING - 4-#5 BARS EA. WAY

FTG. B. - 4'-0" X 4'-0" X 1'-6" DEEP WITH 5-#5 BARS EA. WAY

NOTE: SEE A-5.1 FRAMING PLAN FOR ADDITIONAL STEEL INFORMATION.

NOTE: COLUMN 1 IS 6"Ø - XS.

NOTE: SHOWERS TO HAVE 3" WIDE X 2" TALL CURB. CONTRACTOR MAY CAST IN PLACE OR POUR AFTER WITH BONDING AGENT AND DOWELS. SEE A-4.1 FOR DETAIL.

REVISIONS

Number	Date:	Remarks:	Number	Date:	Remarks:
X	00-00-00	N/A			

CONSULTANTS

CARTER WATKINS ASSOCIATES ARCHITECTS, INC.
POST OFFICE BOX 1004
137 EAST WASHINGTON STREET
MONROE, GEORGIA 30655
Fax: 770/267-1064
email@carterwatkins.com www.carterwatkins.com

SEAL

BENJAMIN MERCER CARTER

BARTOW COUNTY
FIRE STATION NO. 9
Battalion Headquarters

SHEET TITLE:
FOUNDATION PLAN

PRINTED: 00/00/00

path: \\server\shared cad\....

NUMBER:
S-1.1

ISSUED FOR CONSTRUCTION. DATE: 05 / 07 / 14

NOTE:

EXPANSION JOINT TO BE FORMED FROM THE POURING OF TWO DIFFERENT CONCRETE POURS.

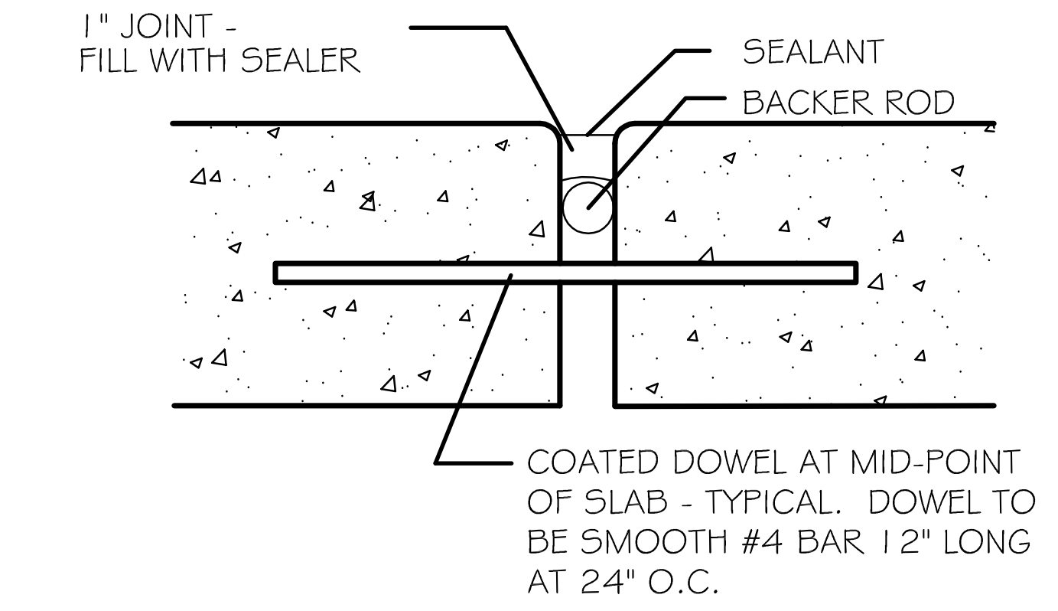
1" JOINT - FILL WITH SEALER
SEALANT
BACKER ROD
COATED DOWEL AT MID-POINT OF SLAB - TYPICAL. DOWEL TO BE SMOOTH #4 BAR 12" LONG AT 24" O.C.

1 EXPANSION JOINT
S-1.2 N.T.S.

NOTE:

CONTROL JOINTS ARE TO BE CUT THE FOLLOWING DAY.

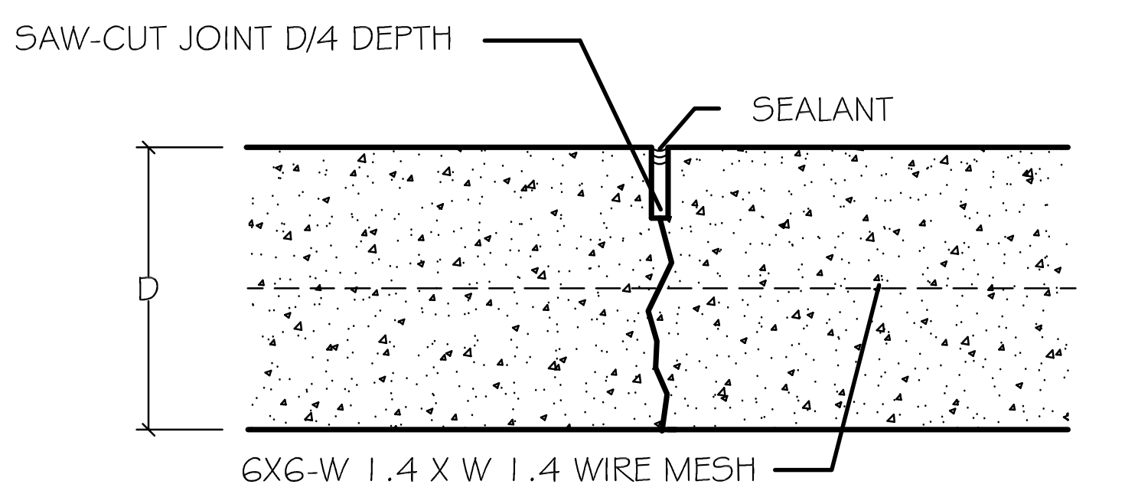
SAW-CUT JOINT D/4 DEPTH
SEALANT
D
6X6-W 1.4 X W 1.4 WIRE MESH

2 CONTROL JOINT
S-1.2 N.T.S.

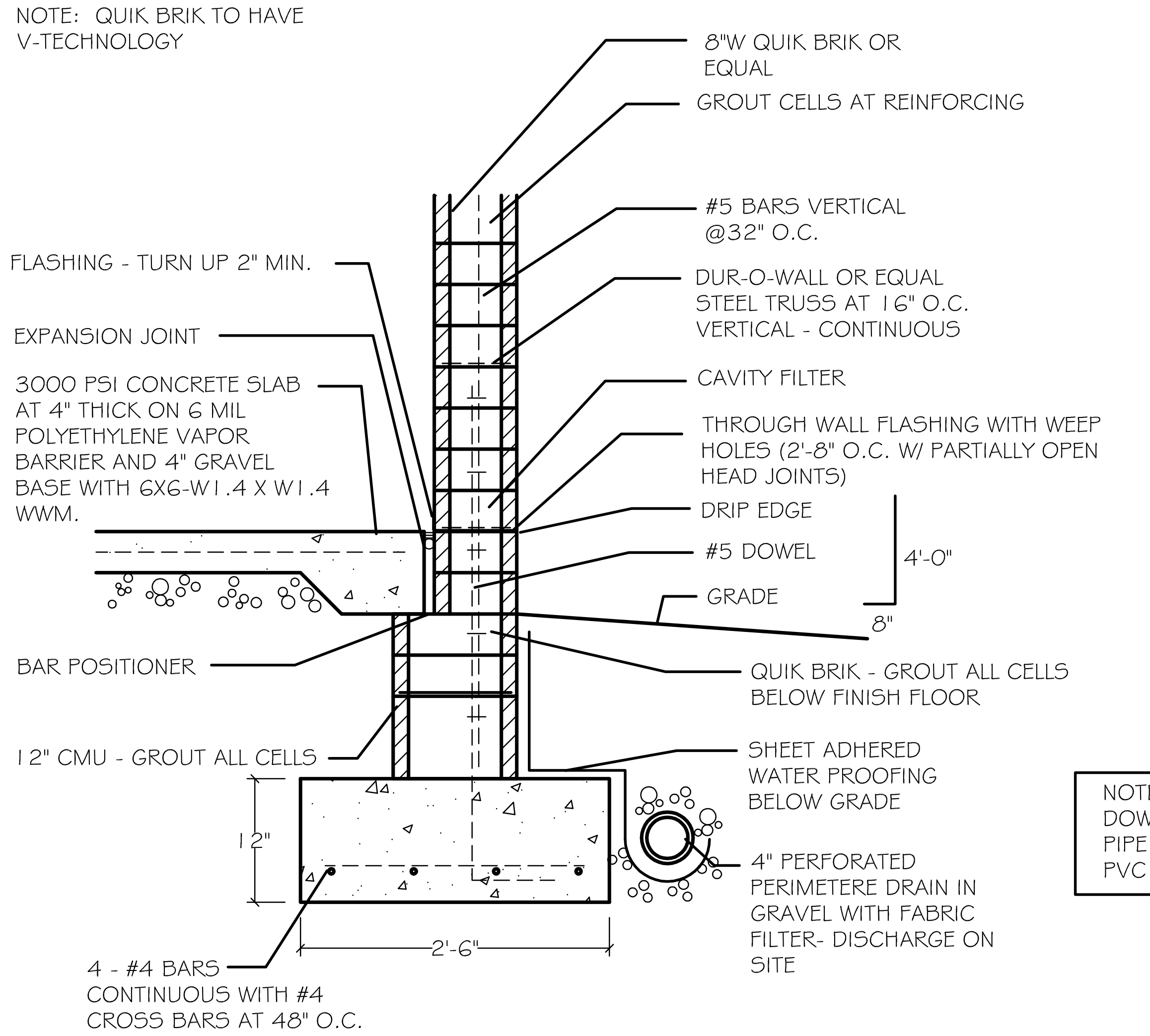
NOTE: QUIK BRIK TO HAVE V-TECHNOLOGY
8"W QUIK BRIK OR EQUAL
GROUT CELLS AT REINFORCING
#5 BARS VERTICAL @32" O.C.
FLASHING - TURN UP 2" MIN.
DUR-O-WALL OR EQUAL STEEL TRUSS AT 16" O.C. VERTICAL - CONTINUOUS
EXPANSION JOINT
CAVITY FILTER
3000 PSI CONCRETE SLAB AT 4" THICK ON 6 MIL POLYETHYLENE VAPOR BARRIER AND 4" GRAVEL BASE WITH 6X6-W1.4 X W1.4 WWM.
THROUGH WALL FLASHING WITH WEEP HOLES (2'-8" O.C. W/ PARTIALLY OPEN HEAD JOINTS)
DRIP EDGE
#5 DOWEL
4'-0"
GRADE
8"
BAR POSITIONER
QUIK BRIK - GROUT ALL CELLS BELOW FINISH FLOOR
12" CMU - GROUT ALL CELLS
SHEET ADHERED WATER PROOFING BELOW GRADE
12"
4" PERFORATED PERIMETERE DRAIN IN GRAVEL WITH FABRIC FILTER- DISCHARGE ON SITE
2'-6"
4 - #4 BARS CONTINUOUS WITH #4 CROSS BARS AT 48" O.C.

3 EXTERIOR WALL FOOTING
S-1.2 SCALE: 1" = 1'-0"

NOTE: SEE S-1.1 PLAN FOR DOWNSPOUT COLLECTOR PIPE LOCATION - 8" SCH. 40 PVC PIPE

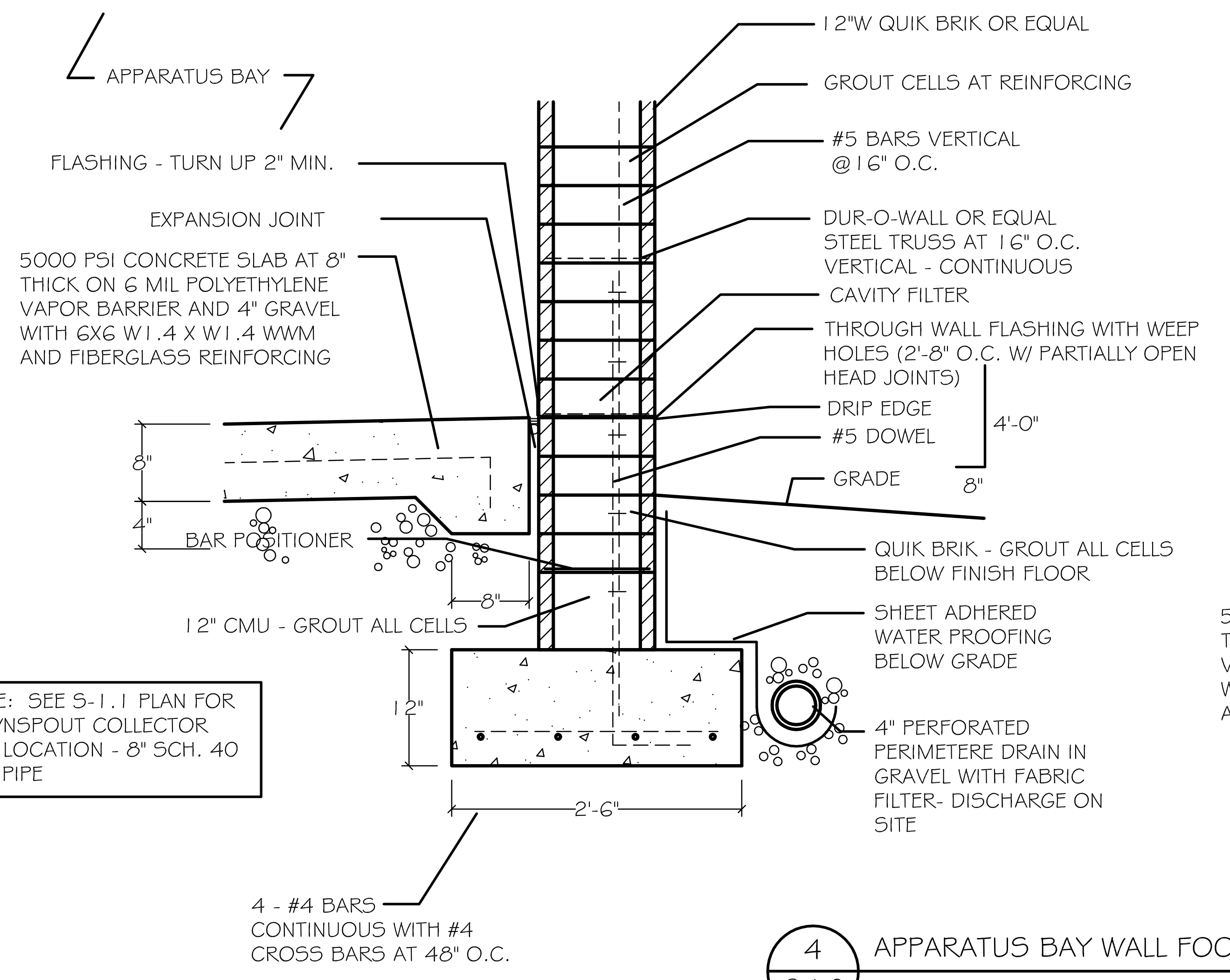
APPARATUS BAY
12"W QUIK BRIK OR EQUAL
GROUT CELLS AT REINFORCING
FLASHING - TURN UP 2" MIN.
#5 BARS VERTICAL @16" O.C.
EXPANSION JOINT
DUR-O-WALL OR EQUAL STEEL TRUSS AT 16" O.C. VERTICAL - CONTINUOUS
5000 PSI CONCRETE SLAB AT 8" THICK ON 6 MIL POLYETHYLENE VAPOR BARRIER AND 4" GRAVEL WITH 6X6 W1.4 X W1.4 WWM AND FIBERGLASS REINFORCING
CAVITY FILTER
THROUGH WALL FLASHING WITH WEEP HOLES (2'-8" O.C. W/ PARTIALLY OPEN HEAD JOINTS)
DRIP EDGE
#5 DOWEL
4'-0"
8"
GRADE
8"
BAR POSITIONER
QUIK BRIK - GROUT ALL CELLS BELOW FINISH FLOOR
8"
12" CMU - GROUT ALL CELLS
SHEET ADHERED WATER PROOFING BELOW GRADE
12"
4" PERFORATED PERIMETERE DRAIN IN GRAVEL WITH FABRIC FILTER- DISCHARGE ON SITE
2'-6"
4 - #4 BARS CONTINUOUS WITH #4 CROSS BARS AT 48" O.C.

4 APPARATUS BAY WALL FOOTING
S-1.2 SCALE: 1" = 1'-0"

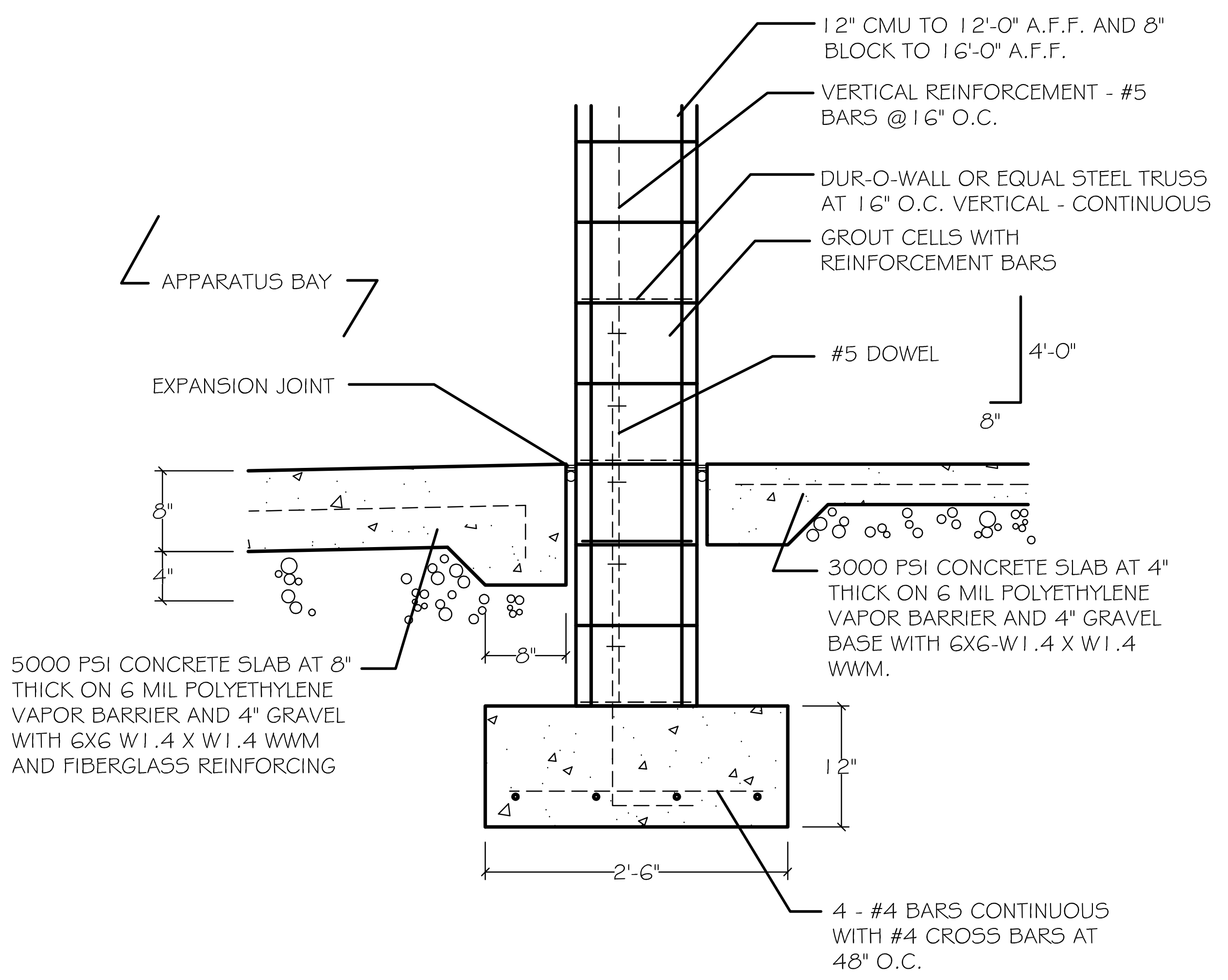
12" CMU TO 12'-0" A.F.F. AND 8" BLOCK TO 16'-0" A.F.F.
VERTICAL REINFORCEMENT - #5 BARS @16" O.C.
DUR-O-WALL OR EQUAL STEEL TRUSS AT 16" O.C. VERTICAL - CONTINUOUS
APPARATUS BAY
GROUT CELLS WITH REINFORCEMENT BARS
#5 DOWEL
4'-0"
8"
EXPANSION JOINT
8"
4"
3000 PSI CONCRETE SLAB AT 4" THICK ON 6 MIL POLYETHYLENE VAPOR BARRIER AND 4" GRAVEL BASE WITH 6X6-W1.4 X W1.4 WWM.
8"
5000 PSI CONCRETE SLAB AT 8" THICK ON 6 MIL POLYETHYLENE VAPOR BARRIER AND 4" GRAVEL WITH 6X6 W1.4 X W1.4 WWM AND FIBERGLASS REINFORCING
12"
2'-6"
4 - #4 BARS CONTINUOUS WITH #4 CROSS BARS AT 48" O.C.

5 APPARATUS BAY INT. WALL
S-1.2 SCALE: 1" = 1'-0"

NOTE: COORDINATE BOLLARD PLACEMENT WITH OVERHEAD DOOR PLACEMENT AND EQUIPMENT CLEARANCES. PROVIDE STEEL SLEEVE IF REQUIRED. BOLLARD TO BE APPROX. 18" FROM WALL. PROVIDE SHOP DRAWINGS FOR BOLLARD INSTALLATION SHOWING ALL REQUIRED CLEARANCES.

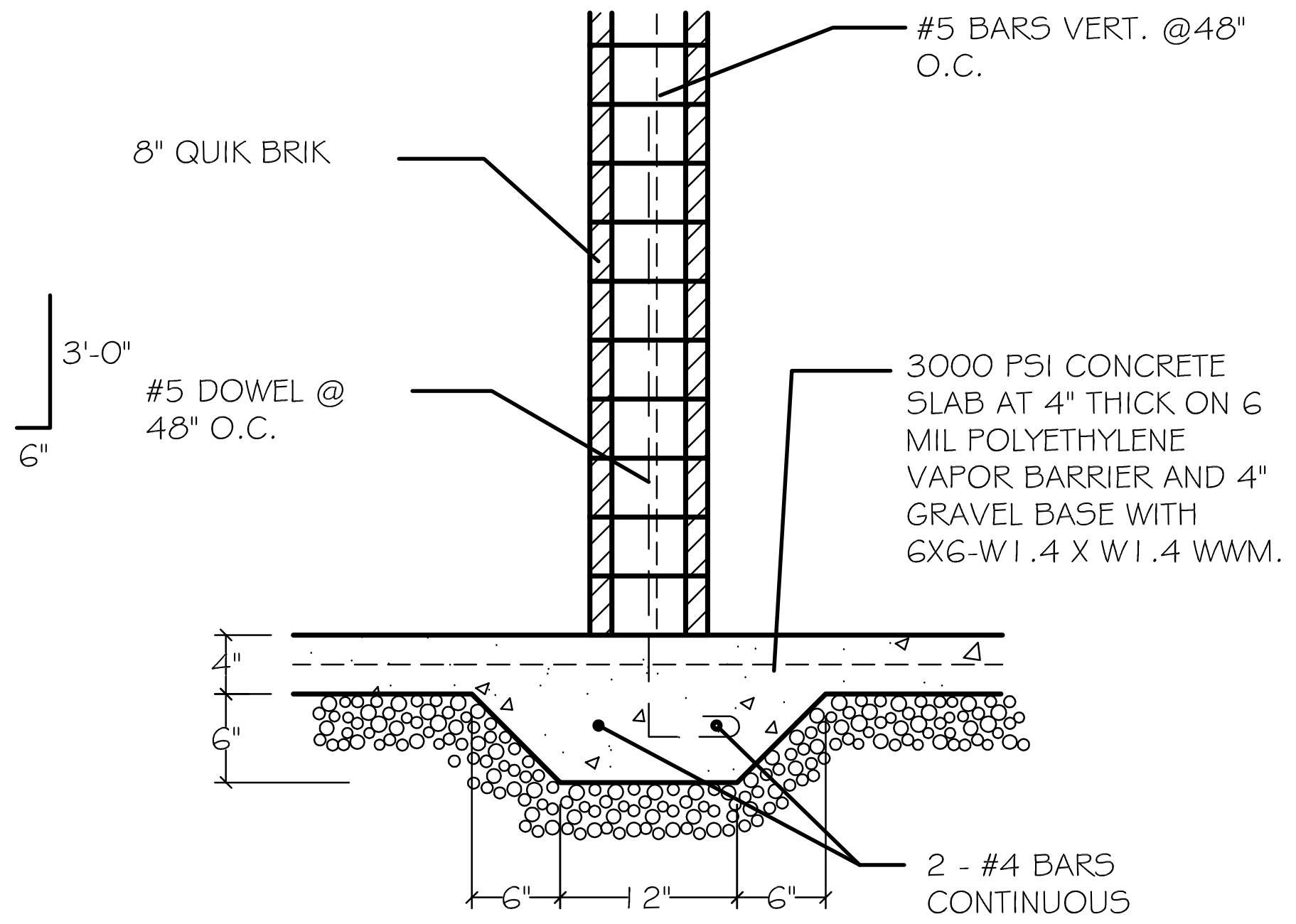
#5 BARS VERT. @48" O.C.
8" QUIK BRIK
3'-0"
6"
#5 DOWEL @ 48" O.C.
3000 PSI CONCRETE SLAB AT 4" THICK ON 6 MIL POLYETHYLENE VAPOR BARRIER AND 4" GRAVEL BASE WITH 6X6-W1.4 X W1.4 WWM.
4"
6"
6"
12"
6"
2 - #4 BARS CONTINUOUS

6 INT. NON-LOAD BEARING WALL
S-1.2 SCALE: 1" = 1'-0"

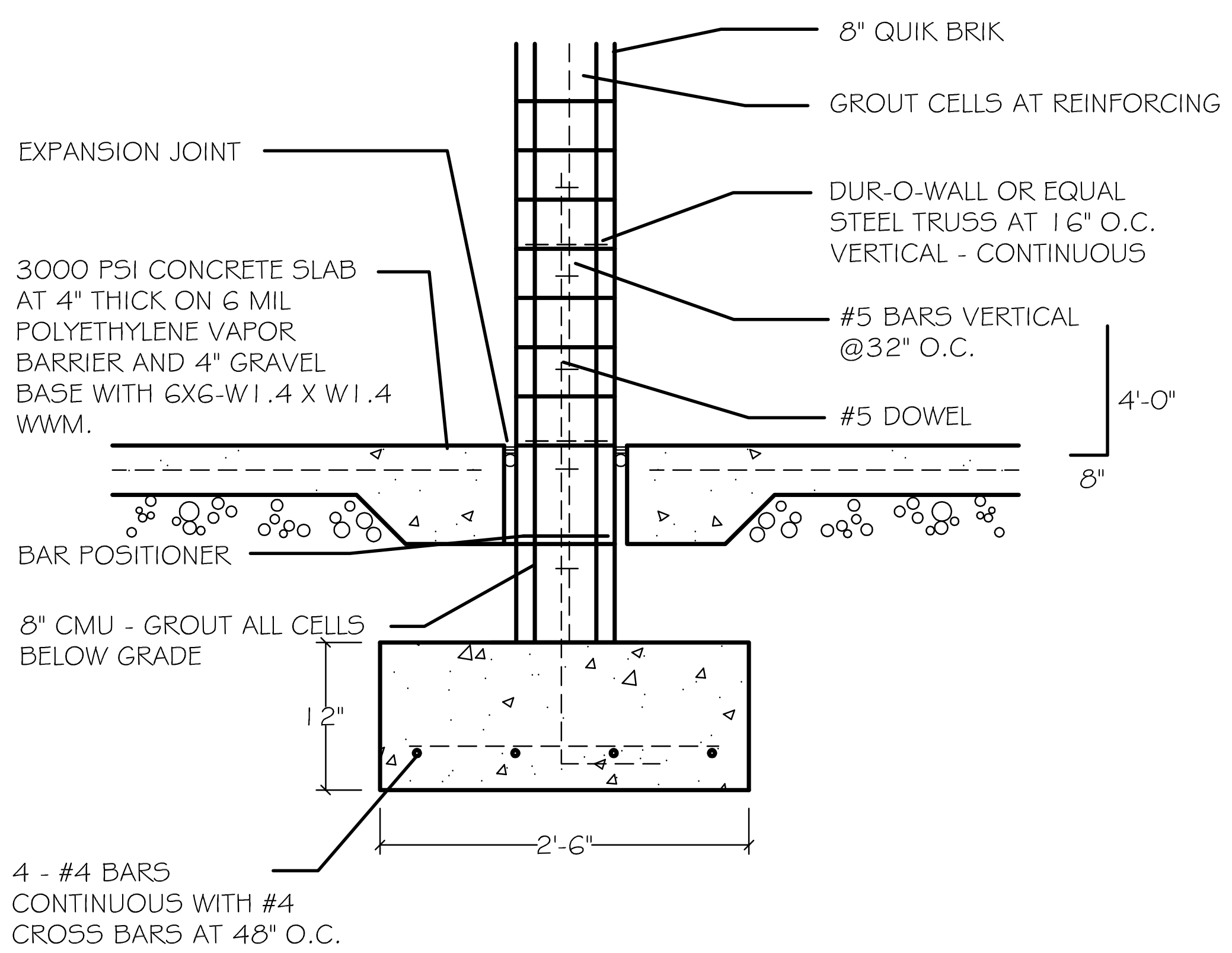
8" QUIK BRIK
GROUT CELLS AT REINFORCING
EXPANSION JOINT
DUR-O-WALL OR EQUAL STEEL TRUSS AT 16" O.C. VERTICAL - CONTINUOUS
3000 PSI CONCRETE SLAB AT 4" THICK ON 6 MIL POLYETHYLENE VAPOR BARRIER AND 4" GRAVEL BASE WITH 6X6-W1.4 X W1.4 WWM.
#5 BARS VERTICAL @32" O.C.
#5 DOWEL
4'-0"
8"
BAR POSITIONER
8" CMU - GROUT ALL CELLS BELOW GRADE
12"
2'-6"
4 - #4 BARS CONTINUOUS WITH #4 CROSS BARS AT 48" O.C.

7 INTERIOR WALL FOOTING
S-1.2 SCALE: 1" = 1'-0"

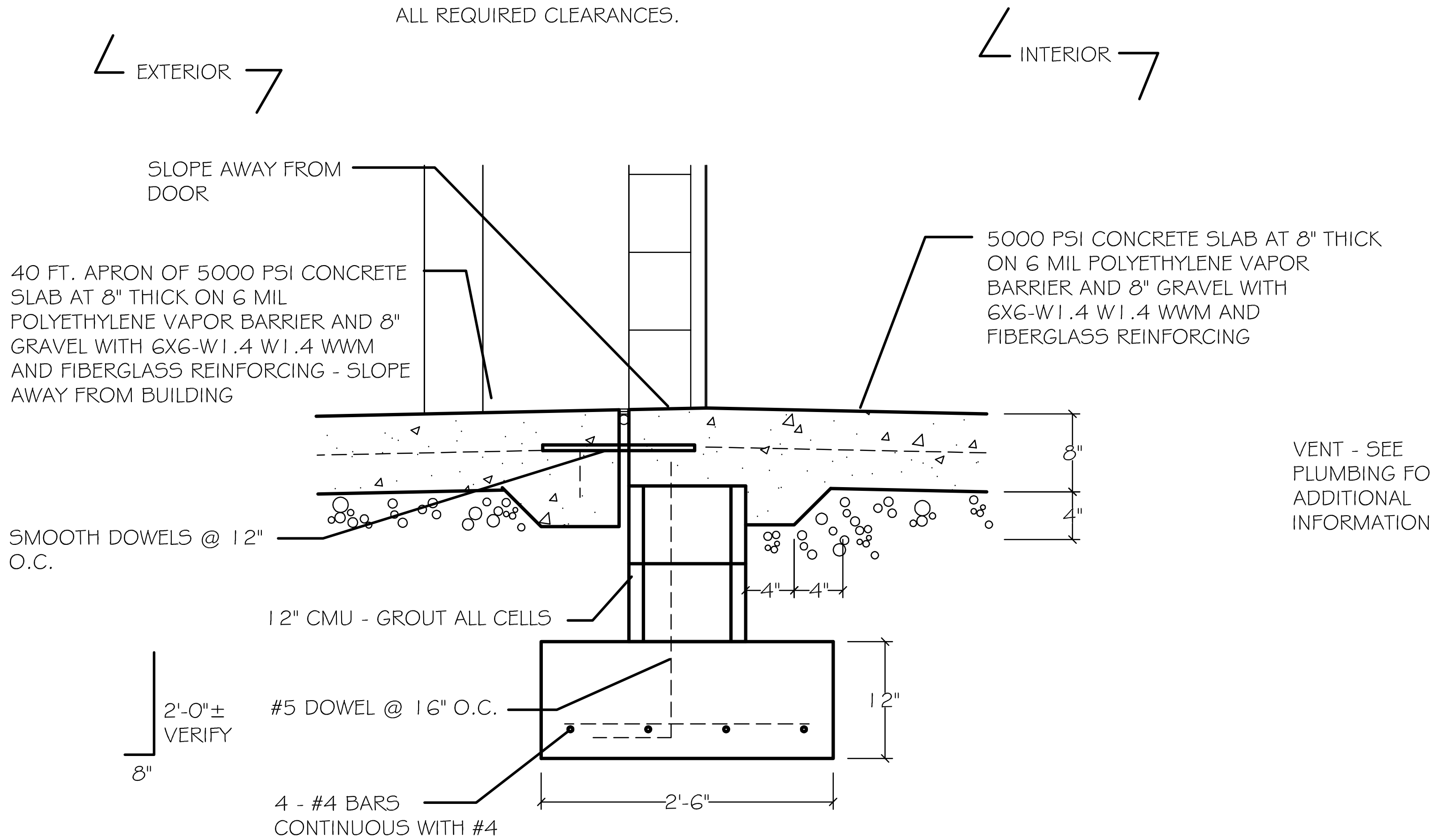
EXTERIOR
INTERIOR
SLOPE AWAY FROM DOOR
5000 PSI CONCRETE SLAB AT 8" THICK ON 6 MIL POLYETHYLENE VAPOR BARRIER AND 8" GRAVEL WITH 6X6-W1.4 W1.4 WWM AND FIBERGLASS REINFORCING
40 FT. APRON OF 5000 PSI CONCRETE SLAB AT 8" THICK ON 6 MIL POLYETHYLENE VAPOR BARRIER AND 8" GRAVEL WITH 6X6-W1.4 W1.4 WWM AND FIBERGLASS REINFORCING - SLOPE AWAY FROM BUILDING
8"
4"
SMOOTH DOWELS @ 12" O.C.
4"
4"
12" CMU - GROUT ALL CELLS
2'-0"± VERIFY
8"
#5 DOWEL @ 16" O.C.
12"
2'-6"
4 - #4 BARS CONTINUOUS WITH #4 CROSS BARS AT 32" O.C.

8 ENGINE BAY FOOTING
S-1.2 SCALE: 1" = 1'-0"

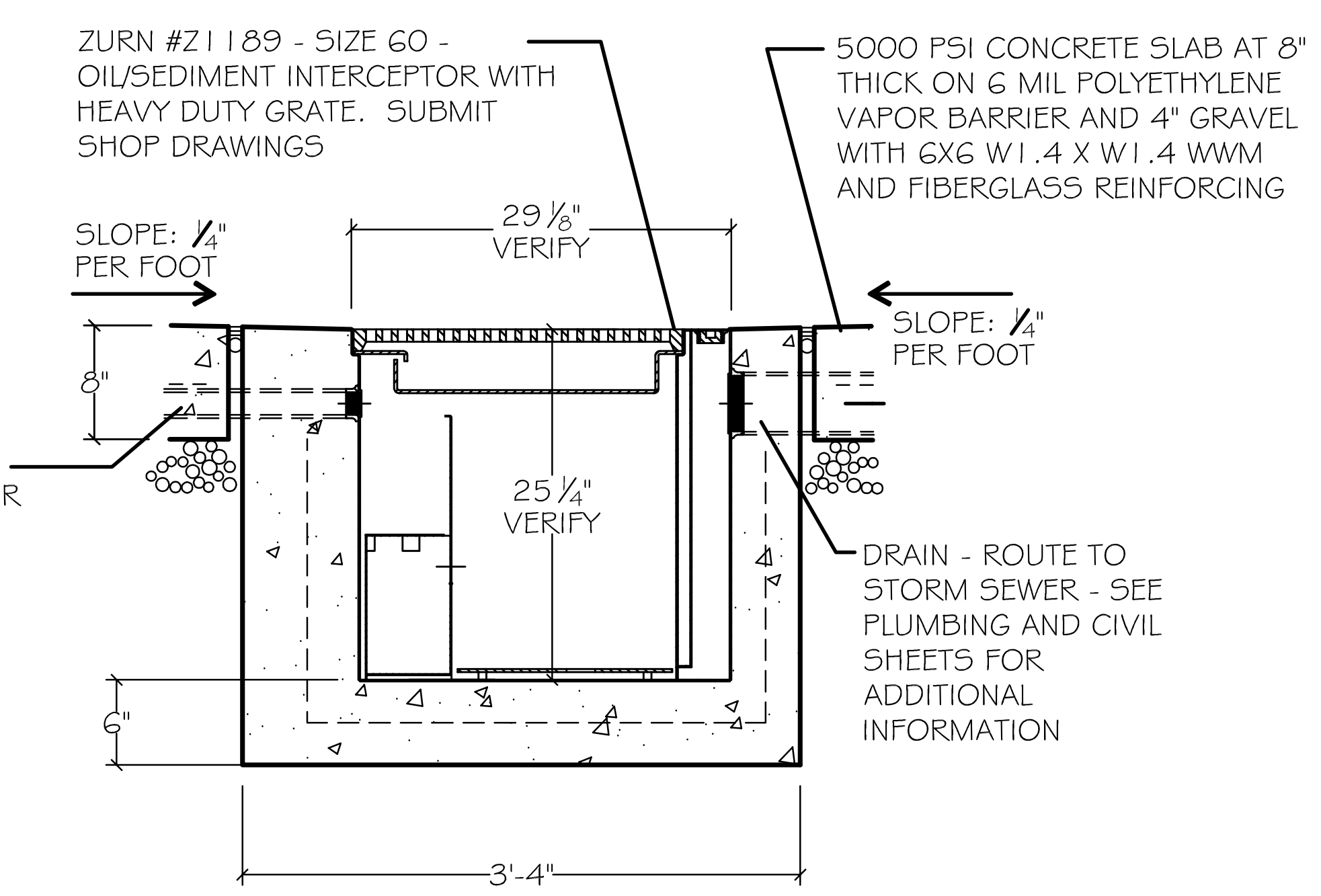
ZURN #Z1189 - SIZE 60 - OIL/SEDIMENT INTERCEPTOR WITH HEAVY DUTY GRATE. SUBMIT SHOP DRAWINGS
5000 PSI CONCRETE SLAB AT 8" THICK ON 6 MIL POLYETHYLENE VAPOR BARRIER AND 4" GRAVEL WITH 6X6 W1.4 X W1.4 WWM AND FIBERGLASS REINFORCING
29 1/8" VERIFY
SLOPE: 1/4" PER FOOT
SLOPE: 1/4" PER FOOT
8"
VENT - SEE PLUMBING FOR ADDITIONAL INFORMATION
25 1/4" VERIFY
DRAIN - ROUTE TO STORM SEWER - SEE PLUMBING AND CIVIL SHEETS FOR ADDITIONAL INFORMATION
6"
3'-4"

9 SECTION AT OIL SEPARATOR
S-1.2 SCALE: 1" = 1' - 0"

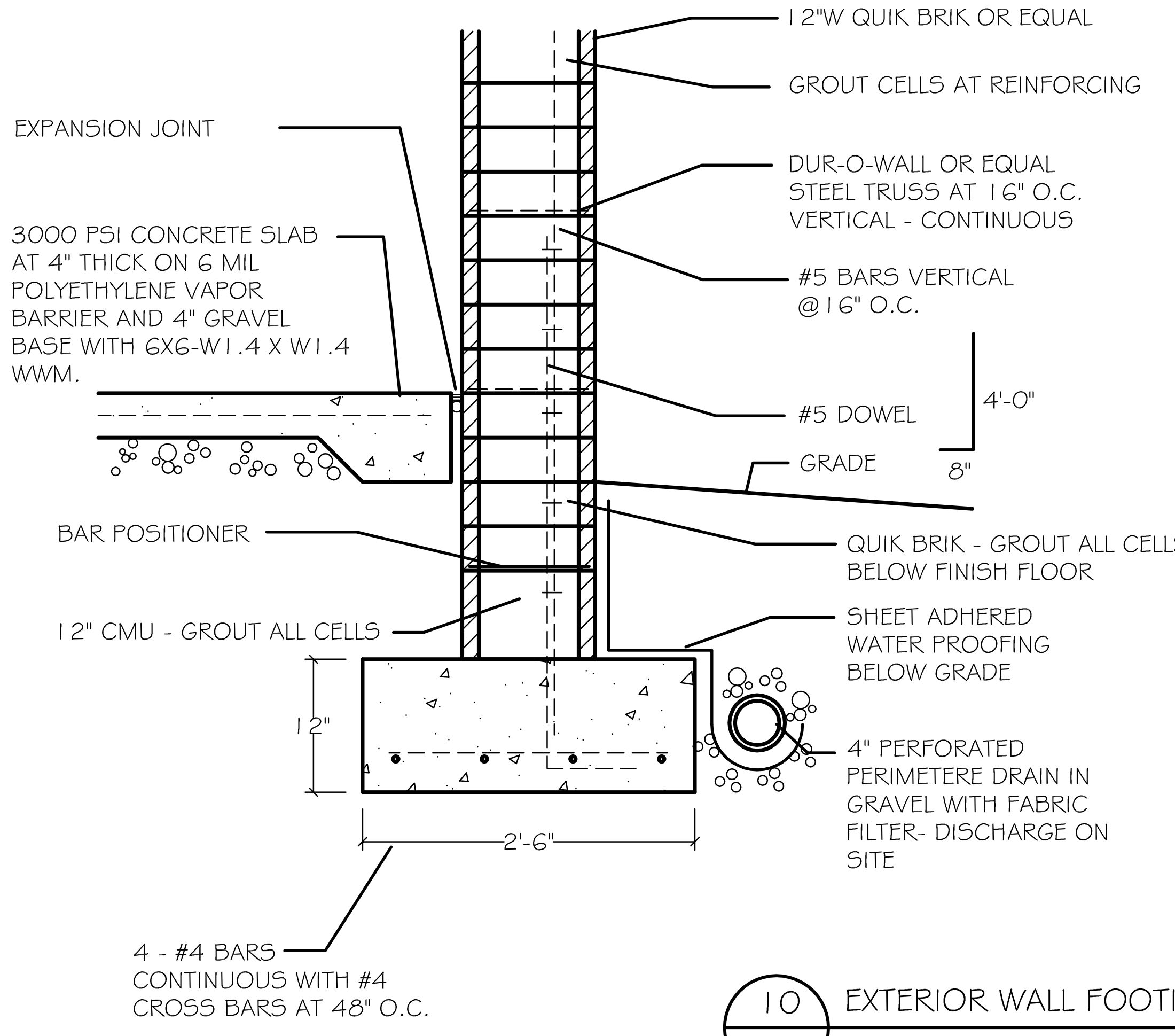
12"W QUIK BRIK OR EQUAL
GROUT CELLS AT REINFORCING
EXPANSION JOINT
DUR-O-WALL OR EQUAL STEEL TRUSS AT 16" O.C. VERTICAL - CONTINUOUS
3000 PSI CONCRETE SLAB AT 4" THICK ON 6 MIL POLYETHYLENE VAPOR BARRIER AND 4" GRAVEL BASE WITH 6X6-W1.4 X W1.4 WWM.
#5 BARS VERTICAL @16" O.C.
#5 DOWEL
4'-0"
GRADE
8"
BAR POSITIONER
QUIK BRIK - GROUT ALL CELLS BELOW FINISH FLOOR
12" CMU - GROUT ALL CELLS
SHEET ADHERED WATER PROOFING BELOW GRADE
12"
4" PERFORATED PERIMETERE DRAIN IN GRAVEL WITH FABRIC FILTER- DISCHARGE ON SITE
2'-6"
4 - #4 BARS CONTINUOUS WITH #4 CROSS BARS AT 48" O.C.

10 EXTERIOR WALL FOOTING
S-1.2 SCALE: 1" = 1'-0"

NOTE: SEE S-1.1 PLAN FOR DOWNSPOUT COLLECTOR PIPE LOCATION - 8" SCH. 40 PVC PIPE

NOTE: 8" SCH. 40 PVC COLLECTOR PIPE FOR DOWNSPOUT COLLECTION NOT SHOWN ON PARTIAL FOOTING SECTION. PROVIDE AS SHOWN ON DETAILS SHEETS - A-3.1-A-3.6 & AS SHOWN ON PLAN S-1.1. ROUTE TO DETENTION POND.

GENERAL NOTES

1. CONTRACTOR TO PROVIDE FOUNDATION PLAN WITH GEORGIA REGISTERED ENGINEER'S STAMP SHOWING DIMENSIONS, FOOTINGS, LOADS, ETC. AT APPRATUS BAY (METAL BUILDING) ONLY.
2. SLOPE ALL FLOORS TOWARD FLOOR DRAINS AT 1/8" PER FOOT - TYPICAL
3. COORDINATE ALL UNDER SLAB WORK WITH FLOOR PLAN DIMENSIONS AND WITH PLUMBING DRAWINGS. SEE ALL MECHANICAL, ELECTRICAL, AND PLUMBING SHEETS FOR ALL UTILITY LOCATIONS.
4. ROUTE ALL DOWN SPOUTS UNDER SIDEWALKS AND ROUTE TO COLLECTOR TO DETENTION.
5. VERIFY ALL DIMENSIONS AND REPORT ANY DISCREPANCIES TO ARCHITECT PRIOR TO PROCEEDING.
6. PROVIDE SLOPED AREAS AT ALL DOORS AS INDICATED.
7. PROVIDE COMPACTION TESTING AND SOIL POISONING PRIOR TO POURING SLAB AND FOOTINGS.

GENERAL STRUCTURAL NOTE

1. STRUCTURAL WORK TO INCLUDE ALL WORK SHOWN ON STRUCTURAL DRAWINGS AND ANY AND ALL STRUCTURAL WORK SHOWN ON ANY OTHER DRAWINGS IN THE SET. BIDS SHALL BE INCLUSIVE OF ALL STRUCTURAL WORK SHOWN ON ALL DRAWINGS AND SHALL INCLUDE ALL ACCESSORIES AND RELATED ITEMS REQUIRED FOR COMPLETE AND OPERABLE SYSTEMS AND ALL WORK AND ITEM AS REQUIRED BY THE LATEST VERSION OF ALL APPLICABLE CODES.
2. COORDINATE WORK WITH ALL EXISTING CONDITIONS. REPORT ANY DISCREPANCIES OR CONFLICTS TO THE ARCHITECT PRIOR TO PROCEEDING WITH THE AFFECTED PORTIONS OF THE WORK.
3. REQUEST CLARIFICATIONS OF ANY CONFLICTS BETWEEN STRUCTURAL AND ARCHITECTURAL DRAWINGS PRIOR TO BIDDING.

REVISIONS

Number	Date:	Remarks:	Number	Date:	Remarks:
X	00-00-00	N/A			

CONSULTANTS

CARTER WATKINS ASSOCIATES
ARCHITECTS, INC.
POST OFFICE BOX 1004
137 EAST WASHINGTON STREET
MONROE, GEORGIA 30655
Fax: 770/267-1064
email@carterwatkins.com www.carterwatkins.com

SEAL

BENJAMIN MERCER CARTER
CERTIFICATE NO. 009277

BARTOW COUNTY FIRE
STATION NO. 9
Battalion Headquarters

SHEET TITLE:
FOUNDATION DETAILS

PRINTED:

NUMBER:
S-1.2

ISSUED FOR CONSTRUCTION. DATE: 7/31/14

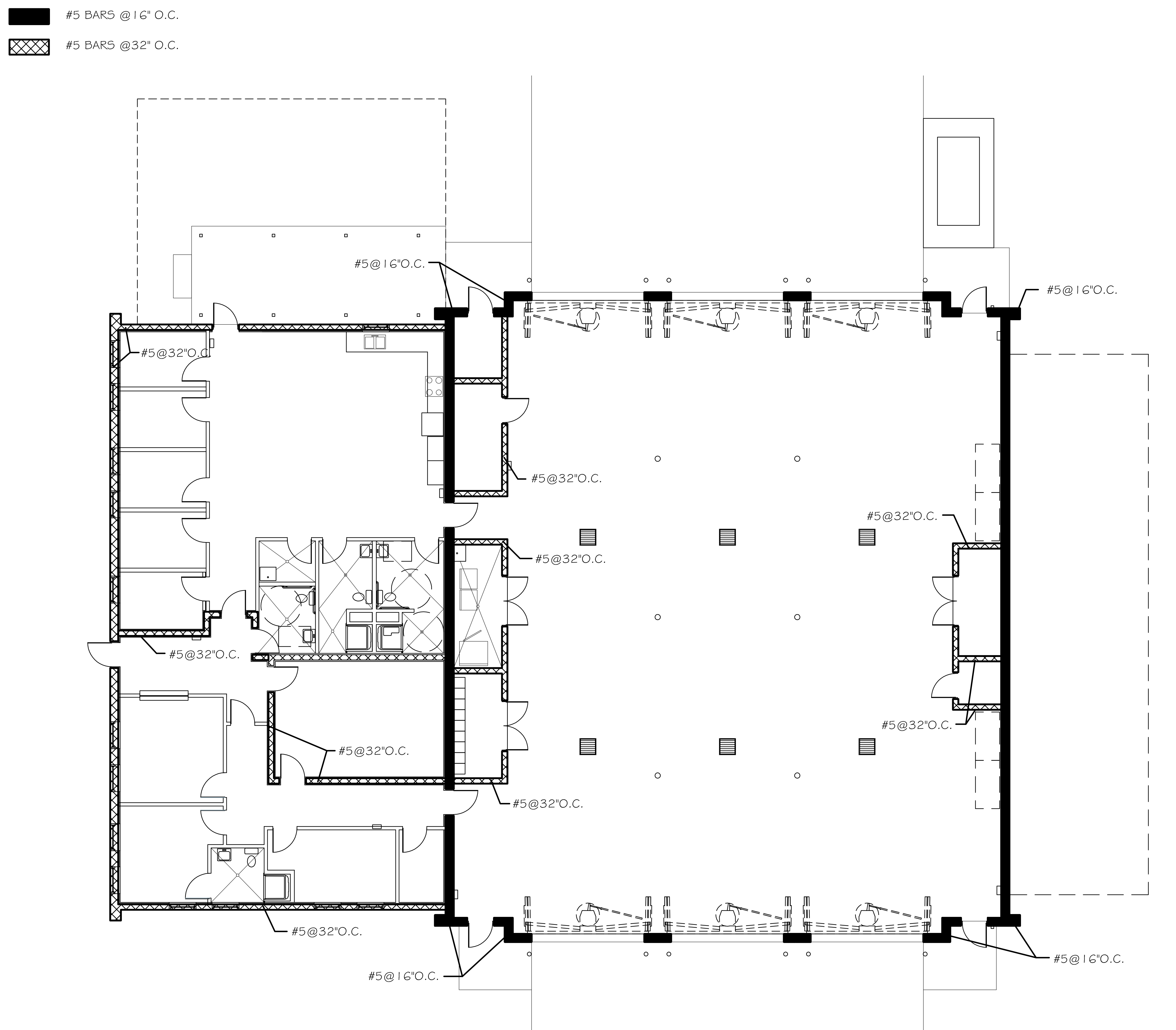

1
S-1.3
REINFORCING PLAN
SCALE: 1/8" = 1'-0"

GENERAL NOTES

1. CONTRACTOR SHALL BE RESPONSIBLE FOR BRACING ALL WORK DURING CONSTRUCTION.
2. FOOTINGS ARE DESIGNED FOR AN ALLOWABLE BEARING CAPACITY OF 3000 P.S.F. / 5000 P.S.F (NOTED ON PLAN) BOTTOM OF FOOTINGS SHALL BEAR 1'–0" INTO ORIGINAL GROUND OR ON CONTROLLED FILL AS SUPERVISED BY GEOTECHNICAL ENGINEER.
3. CONCRETE SHALL HAVE A MINIMUM 28 DAY COMPRESSIVE STRENGTH OF 3000 P.S.I. WITH A 4" MAXIMUM SLUMP. DETAILS NOT SHOWN SHALL BE ACCORDING TO ACI 318 AND ACI 301 SPECIFICATIONS FOR CONCRETE CONSTRUCTION.
   - REINFORCING STEEL SHALL BE ASTM A–615 GRADE 60 (TIES MAY BE GRADE 40)
   - W.W.F. SHALL BE ASTM A–185
   - CONCRETE SHALL HAVE AIR ENTERING AGENTS TO PRODUCE 3% TO 6% AIR BY VOLUME.
   - GROUT SHALL BE 4000 PSI NON SHRINK
4. STRUCTURAL STEEL DETAILS NOT SHOWN SHALL CONFORM TO AISC SPECIFICATIONS FOR STEEL CONSTRUCTION LATEST ADDITION. BAR JOIST SHALL CONFORM TO SJI SPECIFICATIONS. WELDING SHALL BE DONE PER AMERICAN WELDING SOCIETY BY CERTIFIED WELDERS.
   - STRUCTURAL STEEL SHALL BE ASTM A–36
   - STRUCTURAL TUBING SHALL BE ASTM A–500 Fy = 46 ksi
   - STRUCTURAL BOLTS SHALL BE ASTM A–325
   - ANCHOR BOLTS SHALL BE ASTM A–307
   - LIGHT GAUGE FRAMING SHALL BE ASTM A–446 GRADE D
   - CONNECTIONS TO BE DESIGNED BY FABRICATOR TO DEVELOP FULL STRENGTH OF MEMBERS; SUBJECT TO REVIEW BY ENGINEER.
   - DO NOT USE ALUMINUM WHERE SHEET METAL IS SHOWN.
5. CONCRETE MASONRY SHALL CONFORM TO ACI 530.1–92/ASCE 6–92 WITH MASONRY UNITS ASTM C–90–75 GRADE S11 INTERIOR & N11 EXTERIOR AND f'm COMPRESSIVE STRENGTH OF 1500 P.S.I.MINIMUM. STANDARD DUR–O–WALL SHALL BE USED IN ALL MASONRY WALLS AT 16" O.C. UNLESS NOTED OTHERWISE WITH "T" AND "L" SHAPES AT CORNERS. TYPE "S" MORTAR SHALL BE USED. FILL TWO CELLS WITH GROUT AND PROVIDE 1 – #5 BAR EA. CELL W/ 1'–6" DOWELS INTO FOOTING EACH SIDE OF EACH OPENING AND THREE CORNER CELLS IN MASONRY WALLS. GROUT SHALL BE ASTM 476 WITH 9" TO 11" SLUMP, 4'–0" MAXIMUM LIFTS AND PLACED WITHIN 2 1/2 HOURS AFTER FIRST ADDED.
6. C.J. ON PLANS INDICATE CONTROL JOINT 1/8" x 1" DEEP SAWN WITHIN 24 HOURS AFTER PLACING CONCRETE. METAL JOINT MATERIAL MAY BE USED.
7. ARCHITECTS APPROVAL REQUIRED:
   - REINFORCING SHOP DRAWINGS
   - STRUCTURAL STEEL SHOP DRAWINGS WITH ALL CONNECTIONS
   - HANGERS & EQUIPMENT SUPPORTS
   - CONTRACTOR SHALL COORDINATE ALL MECHANICAL OPENINGS AND ADVISE ARCHITECT OF ANY STRUCTURAL CHANGES REQUIRED.
8. STRUCTURAL FRAMING DETAILS SHALL INCLUDE:
   - ALL FLOOR OPENINGS GREATER THAN 12" SQUARE SHALL BE FRAMED WITH 3 x 3 x 3/16 ANGLE U.N.O. WITH #3 BAR EXTENDING 3'–0" PAST OPENING EACH SIDE AND #3 x 3'–0" LONG AT EACH CORNER.
   - ALL ROOF OPENINGS GREATER THAN 12" SQUARE SHALL BE FRAMED WITH 4 x 3 x 3/16 ANGLE U.N.O.

STRUCTURAL NOTES

GENERAL:

A. THE FOLLOWING NOTES APPLY TO ALL STRUCTURAL DRAWINGS.

B. ALL DESIGN AND CONSTRUCTION SHALL BE IN ACCORDANCE WITH THE INTERNATIONAL BUILDING CODE 2000 EDITION, GEORGIA AMENDMENTS.

C. THE GENERAL CONTRACTOR SHALL VERIFY ALL DIMENSIONS AND SITE CONDITIONS AND NOTIFY ARCHITECT OF ANY DISCREPANCIES PRIOR TO PROCEEDING WITH WORK FOR DIMENSIONS NOT SHOWN ON STRUCTURAL DRAWINGS, SEE ARCHITECTURAL DRAWINGS.

D. THE STRUCTURE SHOWN ON THESE DRAWINGS IS SELF-SUPPORTING ONLY IN ITS COMPLETED FORM. THE CONTRACTOR SHALL BE RESPONSIBLE FOR PROVIDING THE DESIGN, ADEQUACY, SAFETY, AND STABILITY OF ALL TEMPORARY ERECTION BRACING AND SHORING.

E. THE GENERAL CONTRACTOR SHALL COORDINATE ALL SIZES AND LOCATIONS OF ROOF PENETRATIONS WITH MECHANICAL AND ARCHITECTURAL DRAWINGS. ALL PENETRATIONS THROUGH ROOF DECK GREATER THAN 12" SQUARE SHALL BE FRAMED AS PER INDUSTRY STANDARDS AND WILL BE SHOWN FOR VERIFICATION IN SHOP DRAWINGS.

F. UNLESS NOTED, ELEVATIONS SHOWN ARE TO BE VERIFIED WITH ELEVATION MARKS OF ARCHITECTURAL DRAWINGS.

G. THE CONTRACTOR SHALL BE RESPONSIBLE FOR MEANS, METHODS, TECHNIQUES, SEQUENCES, AND PROCEDURES OF CONSTRUCTION IN ORDER TO COMPLY WITH THE CONTRACT DRAWINGS.

SHOP DRAWINGS:

A. THE CONTRACTOR SHALL SUBMIT, AS REQUIRED, PRINTS OF SHOP DRAWINGS FOR ALL FABRICATED MATERIALS TO ARCHITECT FOR REVIEW.

B. REVIEW OF SHOP DRAWINGS BY THE ARCHITECT\ENGINEER DOES NOT RELIEVE THE CONTRACTOR OF THE SOLE RESPONSIBILITY FOR ERRORS AND OMISSIONS ASSOCIATED WITH THE PREPARATION OF THOSE SHOP DRAWINGS.

C. SHOP DRAWINGS REQUIRING A SPECIAL ENGINEERING DESIGN BY THE FABRICATOR SHALL BE STAMPED BY A REGISTERED ENGINEER OF RECORD IN THE STATE WHICH CONSTRUCTION WILL OCCUR BEFORE SUBMITTING FOR REVIEW BY THE ARCHITECT\ENGINEER.

DESIGN LOADS:

A. DESIGN ROOF DEAD LOAD:
1. 40 PSF

B. DESIGN ROOF LIVE LOAD:
1. 20 PSF
2. 30 PSF AT HVAC UNIT SUPPORT.
3. REDUCTIONS APPLIED PER TRIBUTARY AREA AS PERMITTED BY CODE,

C. OMITTED

D. DESIGN FLOOR LIVE LOAD:
1. 125 PSF SLAB-ON-GRADE (EXCLUDING APPARATUS BAY - USE GVWR)
2. 50 PSF OFFICE
3. 100 PSF CORRIDOR AND LOBBIES (80 ABOVE FIRST FLOOR)
4. 20 PSF PARTITION LOADS

E. DESIGN SNOW LOAD:
1. GROUND SNOW LOAD, PG = 5 PSF

F. DESIGN WIND LOAD:
1. BASIC WIND SPEED (3 SECONDS GUST): 90 MPH (USE 120 MPH DESIGN)
2. WIND IMPORTANCE FACTOR, 1w = 1.0
3. BUILDING CATEGORY: 1
4. WIND EXPOSURE CATEGORY: B
5. COMPONENTS AND CLADDING WIND PRESSURE:
   EDGE ZONE: -25, +20 PSF, INTERIOR ZONE: -21, +20 PSF

G. DESIGN SEISMIC INFORMATION
1. SEISMIC USE GROUP: 1.
2. SPECTRAL RESPONSE COEFFICIENT, SD = 0.274
3. SPECTRAL RESPONSE COEFFICIENT, SD1 = 0.163
4. SITE CLASS: D
5. BASE SEISMIC- FORCE RESISTING SYSTEM:
   CONCENTRIC STEEL BRACING
6. DESIGN BASE SHEAR: 60K EACH WING
7. ANALYSIS PROCEDURE: EQUIVALENT LATERAL FORCE (1617.4)

SHALLOW FOUNDATIONS:

A. DESIGN SOIL BEARING PRESSURE IS 2000 PSF. MIN.

B. THE SITE SHALL BE PREPARED UNIFORM IN ACCORDANCE WITH CIVIL DRAWINGS & SPECIFICATIONS, A QUALIFIED GEOTECHNICAL ENGINEER SHALL VERIFY ALL COMPACTION AND BEARING CONDITIONS AND REPORT TO THE ARCHITECT\ENGINEER ANY VARIATIONS.

C. ALL EXCAVATIONS AND BUILDING PADS SHALL BE INSPECTED BY A QUALIFIED GEOTECHNICAL ENGINEER TO VERIFY THE DESIGN ASSUMPTIONS AND REPORT ADVERSE CONDITIONS.

D. WHERE FILL IS REQUIRED, IT SHALL BE PLACED IN ACCORDANCE WITH INSTRUCTIONS OF A QUALIFIED GEOTECHNICAL ENGINEER TO MAINTAIN DESIGN BEARING PRESSURE.

E. FOOTING ELEVATIONS GIVEN ARE FOR THE PURPOSE OF DESIGN. SOIL BELOW FOOTING NOT MEETING DESIGN BEARING PRESSURE SHALL BE EXCAVATED TO A DEPTH OF VERIFIABLE DESIGN PRESSURE AND BACKFILLED WITH 57 STONE TO A LEVEL OF FOUNDATION BEARING. THIS SHALL BE UNDER SUPERVISION OF A QUALIFIED GEOTECHNICAL ENGINEER.

F. F/S DENOTES STEP IN FOOTING. SEE "TYPICAL STEPPED FOOTING" DETAIL.

CONCRETE:

A. ALL CONCRETE DESIGN AND CONSTRUCTION SHALL BE IN ACCORDANCE WITH ACI 318-95 AND ACI 301-96.

B. CEMENT SHALL BE TYPE I OR III CONFORMING TO ASTM C 150 AND CONCRETE SHALL DEVELOP A MINIMUM 28 DAY COMPRESSIVE STRENGTH AS FOLLOWS:
FOOTINGS 3000 PSI
ELEVATED SLABS 3000 PSI
INTERIOR SLAB-ON- GRADE 3000 PSI.
APPARATUS BAY IS 5000 PSI MIN.

C. TEST CYLINDERS SHALL BE TAKEN AS A REPRESENTATIVE SAMPLE OF CONCRETE PLACED IN THE AMOUNT 75 CUBIC YARD OR EVERY 24-HOUR PERIOD. RESULTS SHALL BE AVAILABLE AT JOB SITE.

D . TEST RESULTS SHALL BE FORWARDED TO THE ARCHITECT\ENGINEER UNLESS OTHERWISE NOTED, NORMAL WEIGHT CONCRETE (145 PCF) SHALL BE USED WITH 3/4 " MAX. COARSE AGGREGATE CONFORMING TO ASTM C 33. (ROOF DECK TO BE LIGHT WEIGHT 115 PCF MAX.)

E. CONCRETE SLUMP SHALL BE 3" - 5" (MAX) FOR REGULAR MIX WITH SUPERPLASTICIZER ADMIXTURES INCREASING SLUMP TO 8" (MAX) CONCRETE AIR- ENTRAINMENT SHALL BE 4.5% TO 7.5% FOR EXTERIOR SLABS AND 0% TO 3% FOR INTERIOR SLABS.

F. UNLESS OTHERWISE NOTED, CONCRETE COVER FOR REINFORCING STEEL SHALL BE AS FOLLOWS:

CONCRETE CAST AGAINST EARTH 3"
FORMED CONCRETE EXPOSED TO EARTH OR WEATHER 2"
INTERIOR SLABS 1"
EXPOSED WALLS 1 1/2"

G. NO ADDITIONAL WATER SHALL BE ADDED TO THE CONCRETE AT THE JOB SITE.

GROUT AND MORTAR:

A. GROUT UNDER BEARING PLATES SHALL BE NON-SHRINK SIKAGROUT 212 (OR APPROVED EQUAL), MIXING AND PLACEMENT SHALL BE IN ACCORDANCE WITH MANUFACTURERS INSTRUCTIONS.

SLABS:

A. C.J. DENOTES CONCRETE SLAB "CONTROL JOINT" WHICH SHALL BE CUT INTO THE SLABS AT A DEPTH OF 1/4 TIMES THE THICKNESS OF THE SLAB WITHIN 12 HOURS OF PLACING THE CONCRETE. MAXIMUM SPACING OF INTERIOR SLAB CONTROL JOINTS, UNLESS OTHERWISE NOTED, SHALL BE 20'-0" (MAX) IN EACH DIRECTION.

B. SLAB CONSTRUCTION JOINTS SHALL BE USED IN PLACE OF CONTROL JOINTS WHERE NEEDED TO INTERRUPT A CONTINUOUS POUR. SLAB CONSTRUCTION JOINTS SHALL BE KEYED. JOINT LOCATIONS SHALL BE REVIEWED BY ARCHITECT.

C. PLACEMENT OF WELDED WIRE MESH IN SLAB, WHERE SPECIFIED, SHALL BE AT A CONSISTENT DEPTH OF 1"-2" FORM T\SLAB OVERLAP EACH REINFORCING SHEET TWO FULL PANELS AND TIE CROSS WIRES ON EACH SIDE.

D. REFER TO ARCHITECTURAL\MECHANICAL FOR SLAB FINISHES, SLAB DEPRESSIONS, ELEVATIONS, AND ENCASED OR EMBEDDED ITEMS.

E. PLUMBING AND ELECTRICAL CONDUITS SHALL BE PLACED BELOW THE SLAB AND NOT WITHIN THE SLAB. VERTICAL PENETRATIONS ARE ALLOWED.

F. COLUMN BOX-OUTS SHALL BE USED TO ISOLATE AN ADEQUATE AREA AROUND COLUMN BASE PLATES TO PROVIDE FOR COLUMN PLACEMENT AND LEVELING. BOX-OUTS ARE TO BE CLEAN AND FREE OF DEBRIS TO TOP OF FOOTING PRIOR TO FILLING WITH CONCRETE.

REINFORCING STEEL:

A. REINFORCING STEEL AND ACCESSORIES SHALL BE DETAILED IN ACCORDANCE WITH ACI (MANUAL OF STANDARD PRACTICE FOR DETAILING REINFORCED CONCRETE STRUCTURES AND CRSI (MANUAL OF STANDARD PRACTICE) LATEST EDITIONS.

B. REINFORCING STEEL SHALL CONFORM TO ASTM A 615, GRADE 60 (UNLESS NOTED)

C. ALL TENSION SPLICES , INCLUDING SPLICES FROM BARS LABELED CONTINUOUS , SHALL BE CLASS "B" AND COFORM TO ACI 318-95.

D. WELDED WIRE FABRIC SHALL CONFORM TO ASTM A 185 AND BE LAPPED TWO FULL PANELS AND TIED ON EACH OTHER.

E. LONGITUDINAL REINFORCING BARS IN FOOTINGS SHALL BE PLACED CONTINUOUS AT CORNERS AND INTERSECTIONS.

F. FOR EVERY VERTICAL OR HORIZONTAL BAR DISCONTINUED BY AN OPENING, ONE BAR (MIN. OF 2 BARS) SHALL BE ADDED AT SIDE OF OPENING (HALF TO EACH SIDE - TYPICAL) .

STRUCTURAL STEEL:

A. CONFORM TO AISC MANUAL OF STEEL CONSTRUCTION, NINTH EDITION, MATERIALS:

ASTM A 992, FY= 50 KSI IN GENERAL FOR ROLLED SHAPES.
ASTM A 36, FY = 36 KSI FOR PLATES, BARS, ANGLES, AND CHANNELS.
ASTM A 500, GRADE B, FY = 46 KSI FOR STRUCTURAL TUBING.
ASTM A 501, FY = 36 KSI FOR PIPES.
ASTM A 325, TYPE 1, FOR HIGH STRENGTH BOLTS.
ASTM A 563, HEAVY-HEX NUTS.
ASTM AF436, HARDENED STEEL WASHERS.
ASTM A 36, THREADED RODS TO BE USED AS ANCHOR BOLTS.

B. THE DESIGN OF CONNECTIONS FOR ANY PORTION OF THE STRUCTURE NOT INDICATED ON THE DRAWINGS SHALL BE DESIGNED BY THE FABRICATOR AS FOLLOWS:

1. STANDARD CONNECTIONS SHALL BE USED WHERE POSSIBLE.
2. ALL SHOP CONNECTIONS SHALL BE WELDED OR HIGH STRENGTH BOLTED. FIELD CONNECTIONS SHALL BE HIGH STRENGTH BOLTED WHERE POSSIBLE.
3. UNLESS NOTED, BOLTS SHALL BE 3/4" DIAMETER ASTM A -325 TYPE N BEARING CONNECTIONS. BOLTS SHALL BE "SNUG-TIGHT".
4. PROVIDE THE MINIMUM NUMBER OF BOLTS REQUIRED TO DEVELOP THE BEAM SHEAR "V"AS NOTED ON THE DRAWINGS. IF THE BEAM SHEAR IS NOT NOTED, THE CONNECTIONS SHALL DEVELOP THE BEAM SHEAR V = EQUAL ONE HALF ALLOWABLE BEAM UNIFORM LOAD BASED ON LATERALLY SUPPORTED SIMPLE SPAN MOMENTS PER TABLES LOCATED IN THE AISC MANUAL OF STEEL CONSTRUCTION, 9TH EDITION.

C. STRUCTURAL STEEL SHALL RECEIVE ONE SHOP COAT RUSH INHIBITIVE PRIMER UNLESS NO PAINT SPECIFIED BY ARCHITECT FOR FIRE PROOFING.

D. STEEL COLUMNS AND BASE PLATES SHALL HAVE MINIMUM 3" CONCRETE COVER PROTECTION.

ISSUED FOR CONSTRUCTION. DATE: 7 / 31 / 14

REVISIONS

Number	Date:	Remarks:	Number	Date:	Remarks:
X	00-00-00	N/A			

CONSULTANTS

CARTER WATKINS ASSOCIATES
ARCHITECTS, INC.
POST OFFICE BOX 1004
137 EAST WASHINGTON STREET
MONROE, GEORGIA 30655
Fax: 770/267-1064
email@carterwatkins.com www.carterwatkins.com

SEAL
BENJAMIN MERCER CARTER

BARTOW COUNTY FIRE
STATION NO. 9
Battalion Headquarters

SHEET TITLE:
STRUCTURAL NOTES

PRINTED:

NUMBER:
S-1.3

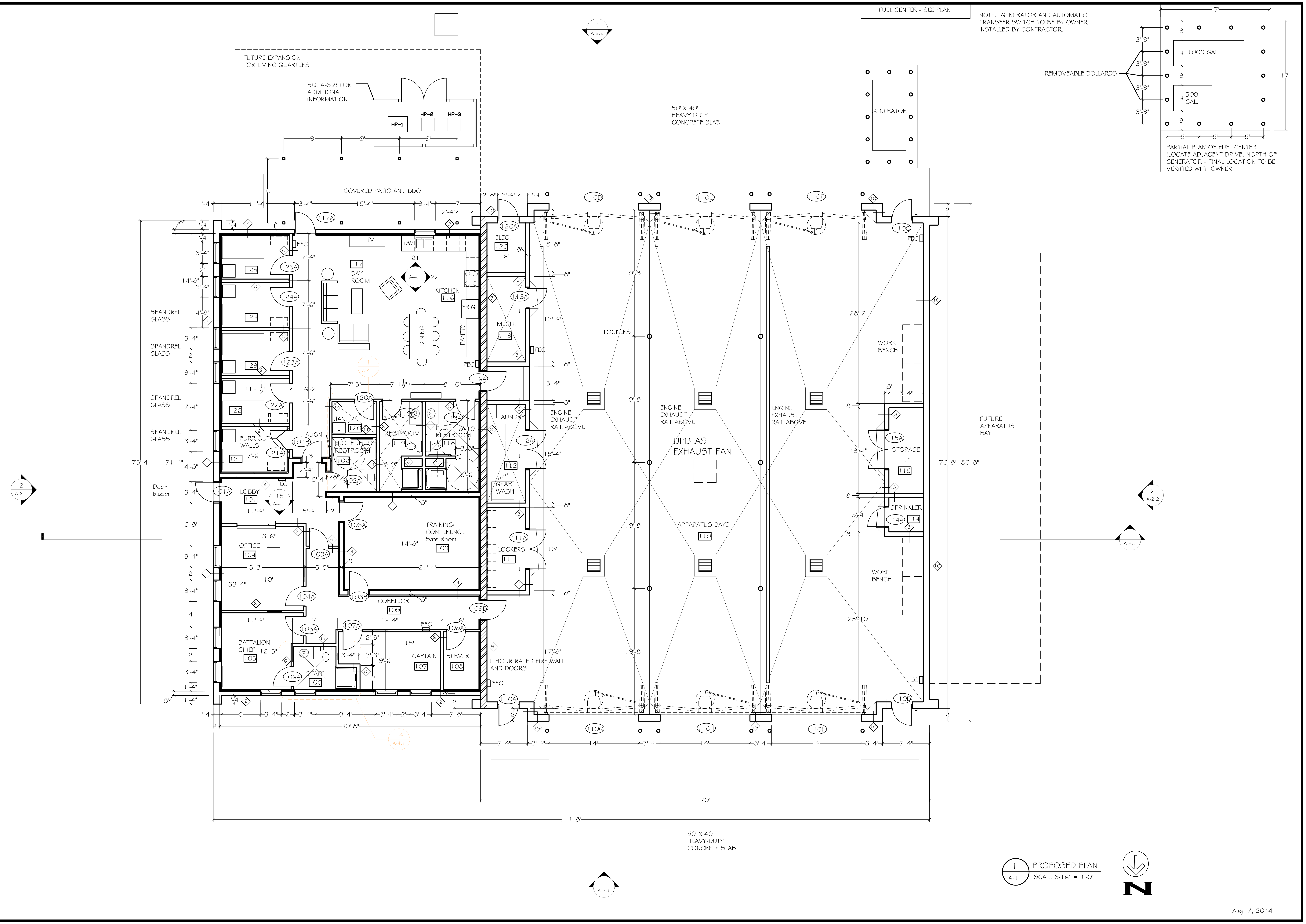
FUEL CENTER - SEE PLAN
NOTE: GENERATOR AND AUTOMATIC TRANSFER SWITCH TO BE BY OWNER. INSTALLED BY CONTRACTOR.
REMOVEABLE BOLLARDS
1000 GAL.
500 GAL.
17'
PARTIAL PLAN OF FUEL CENTER (LOCATE ADJACENT DRIVE, NORTH OF GENERATOR - FINAL LOCATION TO BE VERIFIED WITH OWNER
GENERATOR
50' X 40' HEAVY-DUTY CONCRETE SLAB
FUTURE EXPANSION FOR LIVING QUARTERS
SEE A-3.8 FOR ADDITIONAL INFORMATION
HP-1
HP-2
HP-3
COVERED PATIO AND BBQ
SPANDREL GLASS
Door buzzer
DAY ROOM 117
KITCHEN 116
DINING
PANTRY
FRIG.
TV
DW
ELEC. 126
MECH. 113
LAUNDRY 112
GEAR WASH
LOCKERS 111
JAN. 120
H.C. PUBLIC RESTROOM 102
RESTROOM 119
H.C. RESTROOM 118
FURR OUT WALLS
LOBBY 101
OFFICE 104
TRAINING/ CONFERENCE Safe Room 103
CORRIDOR 109
BATTALION CHIEF 105
STAFF 106
CAPTAIN 107
SERVER 108
1-HOUR RATED FIRE WALL AND DOORS
LOCKERS
ENGINE EXHAUST RAIL ABOVE
UPBLAST EXHAUST FAN
APPARATUS BAYS 110
WORK BENCH
STORAGE 115
SPRINKLER 114
FUTURE APPARATUS BAY
FEC
70'
111'-8"
PROPOSED PLAN
SCALE 3/16" = 1'-0"
N

Aug. 7, 2014

REVISIONS

Number	Date:	Remarks:	Number	Date:	Remarks:
X	00-00-00	N/A			

CONSULTANTS

CARTER WATKINS ASSOCIATES ARCHITECTS, INC.
POST OFFICE BOX 1004
137 EAST WASHINGTON STREET
MONROE, GEORGIA 30655
Fax: 770/267-1064
email@carterwatkins.com www.carterwatkins.com

SEAL

BENJAMIN MERCER CARTER

BARTOW COUNTY
FIRE STATION NO. 9
Battalion Headquarters

SHEET TITLE: PROPOSED FLOOR PLAN

PRINTED: 00/00/00

path: \\server\shared cad\....

NUMBER: A-1.1

ISSUED FOR CONSTRUCTION. DATE: 00/00/14

Folding doors to be Four fold doors by Door Engineering and manufacturing (or equal). 14'-0" wide x 16'-0" arched top glass doors. Frame colors to be red. Provide all required accessories. Submit shop drawings. Verify mounting requirements and clearances prior to ordering. Ensure all other equipment in Apparatus bay is installed to allow door operation. Provide weatherstripping on all sides.

Provide door operators for each door. Provide power in apparatus bay room ceiling for each operator and switches (one per operator/bank of four) route to doors (switches to be at each exterior and adj. interior corridor entrances. Verify Final location with Owner. Provide 12 total openers - 2 per door operator.

NOTE: ENTIRE EXTERIOR TO BE CLEAR SEALED. SEE SPECIFICATIONS FOR SEALANT INFORMATION. BACK OF PARAPETS TO BE COVERED WITH ROOFING MEMBRANE

NOTES:

1. CORNICE TO BE E.I.F.S. COLOR TO BE SELECTED. SUBMIT SHOP DRAWINGS FOR PROFILES, ANCHORS, BENT ALUM. CAPS, AND BRACKETS.

2. EXTERIOR WALL IS REINFORCED QUIK BRIK BY OLDCASTLE OR EQUAL. ALL COLORS TO BE SELECTED. ALLOW FOR 2 EXTERIOR COLORS - PROVIDE 3/8" CONTROL JOINTS WITH BACKER ROD AND SEALANT (SEE DETAIL ON A-0.1) - VERIFY PLACEMENT WITH ACI REQUIREMENTS - IN ADDITION TO THOSE SHOWN.

3. ALL FASCIA AND FRIEZE BOARD WITH BRICK MOLD TO BE SOLID VINYL OR EQUAL. PROVIDE VENTED SOFFIT AT EAVES - TYPICAL AND SOLID SOFFITS AT ALL GABLES. COLRO TO BE SELECTED. PROVIDE ALL TRIM, ACCESSORIES. ETC. AS REQUIRED FOR INSTALLATION.

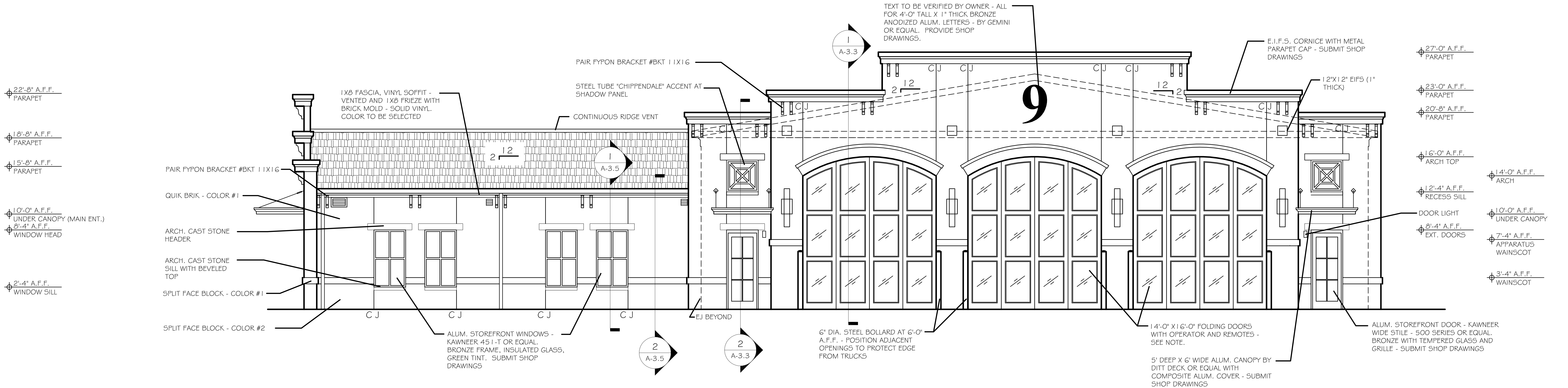
22'-8" A.F.F. PARAPET
18'-8" A.F.F. PARAPET
15'-8" A.F.F. PARAPET
10'-0" A.F.F. UNDER CANOPY (MAIN ENT.)
8'-4" A.F.F. WINDOW HEAD
2'-4" A.F.F. WINDOW SILL
PAIR FYPON BRACKET #BKT 11X16
QUIK BRIK - COLOR #1
ARCH. CAST STONE HEADER
ARCH. CAST STONE SILL WITH BEVELED TOP
SPLIT FACE BLOCK - COLOR #1
SPLIT FACE BLOCK - COLOR #2
1X8 FASCIA, VINYL SOFFIT - VENTED AND 1X8 FRIEZE WITH BRICK MOLD - SOLID VINYL. COLOR TO BE SELECTED
CONTINUOUS RIDGE VENT
2 12
1 A-3.5
2 A-3.5
C J
ALUM. STOREFRONT WINDOWS - KAWNEER 451-T OR EQUAL. BRONZE FRAME, INSULATED GLASS, GREEN TINT. SUBMIT SHOP DRAWINGS
PAIR FYPON BRACKET #BKT 11X16
STEEL TUBE "CHIPPENDALE" ACCENT AT SHADOW PANEL
EJ BEYOND
1 A-3.3
2 A-3.3
TEXT TO BE VERIFIED BY OWNER - ALL FOR 4'-0" TALL X 1" THICK BRONZE ANODIZED ALUM. LETTERS - BY GEMINI OR EQUAL. PROVIDE SHOP DRAWINGS.
9
6" DIA. STEEL BOLLARD AT 6'-0" A.F.F. - POSITION ADJACENT OPENINGS TO PROTECT EDGE FROM TRUCKS
14'-0" X 16'-0" FOLDING DOORS WITH OPERATOR AND REMOTES - SEE NOTE.
5' DEEP X 6' WIDE ALUM. CANOPY BY DITT DECK OR EQUAL WITH COMPOSITE ALUM. COVER - SUBMIT SHOP DRAWINGS
E.I.F.S. CORNICE WITH METAL PARAPET CAP - SUBMIT SHOP DRAWINGS
12"X12" EIFS (1" THICK)
DOOR LIGHT
ALUM. STOREFRONT DOOR - KAWNEER WIDE STILE - 500 SERIES OR EQUAL. BRONZE WITH TEMPERED GLASS AND GRILLE - SUBMIT SHOP DRAWINGS
27'-0" A.F.F. PARAPET
23'-0" A.F.F. PARAPET
20'-8" A.F.F. PARAPET
16'-0" A.F.F. ARCH TOP
12'-4" A.F.F. RECESS SILL
8'-4" A.F.F. EXT. DOORS
14'-0" A.F.F. ARCH
10'-0" A.F.F. UNDER CANOPY
7'-4" A.F.F. APPARATUS WAINSCOT
3'-4" A.F.F. WAINSCOT

1 / A-2.1 FRONT ELEVATION (NORTH)
SCALE 3/16" = 1'-0"

NOTE:

ALL GUTTERS AND DOWNSPOUTS TO BE 26 GAUGE STEEL WITH KYNAR FINISH. PROVIDE METAL GUTTER GUARDS WITH FACTORY BAKED-ENAMEL FINISH WITH CONCEALED SPLICE JOINTS. COLOR OF DOWNSPOUTS AND COLOR OF GUTTERS TO BE SELECTED (MAY BE TWO COLORS). GUTTERS TO 6" SQUARE BOX GUTTERS. MATCH PROFILES SHOWN AND DOWN SPOUTS TO BE 5" DIAMETER ROUND. GUTTERS AND DOWN SPOUTS TO BE COMPLETE ENGINEERED RAIN/WATER HANDLING SYSTEM WITH APPROPRIATE POSITIVE DRAINAGE, DOWN SPOUTS, WALL ANCHORS, AND OTHER COMPONENTS NECESSARY FOR COMPLETE AND OPERABLE SYSTEM. DOWN SPOUTS TO BE ANCHORED TO BUILDING IN A MANNER THAT PROVIDES ADEQUATE STABILITY. SUBMIT ANCHORS FOR APPROVAL. COLOR TO BE SELECTED. SUBMIT COLOR CHART

ALL EXPOSED MASONRY (FRONT AND BACK OF PARAPETS, ETC) TO BE WATER-PROOFED WITH A MINIMUM OF TWO COATS WATERPROOFING. PROVIDE 10 YEAR WARRANTY.

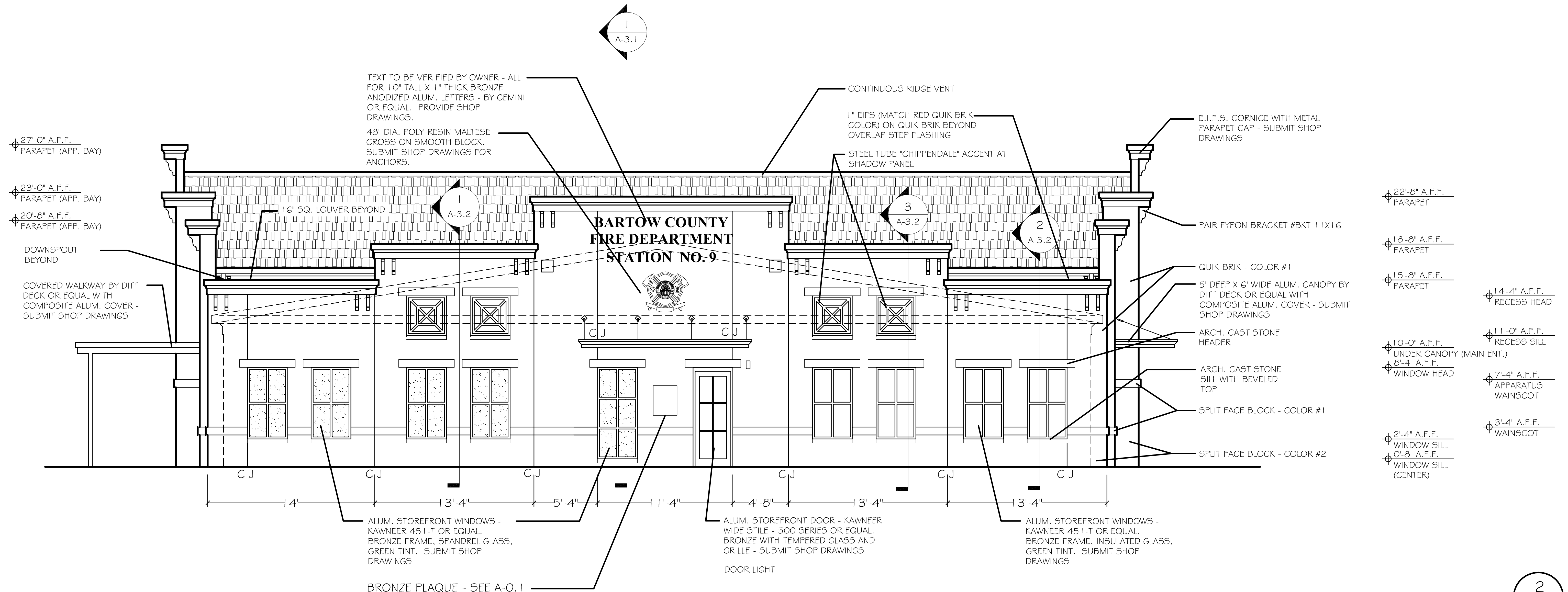
1 A-3.1
TEXT TO BE VERIFIED BY OWNER - ALL FOR 10" TALL X 1" THICK BRONZE ANODIZED ALUM. LETTERS - BY GEMINI OR EQUAL. PROVIDE SHOP DRAWINGS.
48" DIA. POLY-RESIN MALTESE CROSS ON SMOOTH BLOCK. SUBMIT SHOP DRAWINGS FOR ANCHORS.
27'-0" A.F.F. PARAPET (APP. BAY)
23'-0" A.F.F. PARAPET (APP. BAY)
20'-8" A.F.F. PARAPET (APP. BAY)
16" SQ. LOUVER BEYOND
DOWNSPOUT BEYOND
COVERED WALKWAY BY DITT DECK OR EQUAL WITH COMPOSITE ALUM. COVER - SUBMIT SHOP DRAWINGS
1 A-3.2
BARTOW COUNTY
FIRE DEPARTMENT
STATION NO. 9
C J
4'
3'-4"
5'-4"
11'-4"
4'-8"
3'-4"
3'-4"
ALUM. STOREFRONT WINDOWS - KAWNEER 451-T OR EQUAL. BRONZE FRAME, SPANDREL GLASS, GREEN TINT. SUBMIT SHOP DRAWINGS
BRONZE PLAQUE - SEE A-0.1
ALUM. STOREFRONT DOOR - KAWNEER WIDE STILE - 500 SERIES OR EQUAL. BRONZE WITH TEMPERED GLASS AND GRILLE - SUBMIT SHOP DRAWINGS
DOOR LIGHT
CONTINUOUS RIDGE VENT
1" EIFS (MATCH RED QUIK BRIK COLOR) ON QUIK BRIK BEYOND - OVERLAP STEP FLASHING
STEEL TUBE "CHIPPENDALE" ACCENT AT SHADOW PANEL
3 A-3.2
2 A-3.2
E.I.F.S. CORNICE WITH METAL PARAPET CAP - SUBMIT SHOP DRAWINGS
PAIR FYPON BRACKET #BKT 11X16
QUIK BRIK - COLOR #1
5' DEEP X 6' WIDE ALUM. CANOPY BY DITT DECK OR EQUAL WITH COMPOSITE ALUM. COVER - SUBMIT SHOP DRAWINGS
ARCH. CAST STONE HEADER
ARCH. CAST STONE SILL WITH BEVELED TOP
SPLIT FACE BLOCK - COLOR #1
SPLIT FACE BLOCK - COLOR #2
ALUM. STOREFRONT WINDOWS - KAWNEER 451-T OR EQUAL. BRONZE FRAME, INSULATED GLASS, GREEN TINT. SUBMIT SHOP DRAWINGS
22'-8" A.F.F. PARAPET
18'-8" A.F.F. PARAPET
15'-8" A.F.F. PARAPET
10'-0" A.F.F. UNDER CANOPY (MAIN ENT.)
8'-4" A.F.F. WINDOW HEAD
2'-4" A.F.F. WINDOW SILL
0'-8" A.F.F. WINDOW SILL (CENTER)
14'-4" A.F.F. RECESS HEAD
11'-0" A.F.F. RECESS SILL
7'-4" A.F.F. APPARATUS WAINSCOT
3'-4" A.F.F. WAINSCOT

2 / A-2.1 SIDE ELEVATION (EAST)
SCALE 3/16" = 1'-0"

NOTE: FLASHING AND WEEPHOLES IN MASONRY VENEER

1. FLASHING AND WEEPHOLES SHALL BE LOCATED IN THE FIRST COURSE OF MASONRY ABOVE FINISHED GROUND LEVEL ABOVE THE FOUNDATION WALL OR SLAB, AND OTHER POINTS OF SUPPORT, INCLUDING STRUCTURAL FLOORS, SHELF ANGLES, AND LINTELS WHERE ANCHORED VENEERS ARE USED. (2000 INTERNATIONAL BUILDING CODE - SECTION 1405.3.2)(APPROX. 8")

2. WEEP HOLES PROVIDED IN THE OUTSIDE WYTHE OF MASONRY WALLS SHALL BE AT A MAXIMUM SPACING OF 33 INCHES ON CENTER. WEEP HOLES SHALL NOT BE LESS THAN 3/16" IN DIAMETER. (2000 INTERNATIONAL BUILDING CODE - SECTION - 2104.1.8)

3. FLASHING AT GRADE LEVEL TO BE 40 MIL NEOPRENE FLASHING OR EQUAL.

NOTE: CONTRACTOR TO BE REPONSIBLE FOR ALL MEANS AND METHODS OF MASONRY WATERPROOFING DURING CONSTRUCTION.

NOTE: FINISH FLOOR OF HEADQUARTERS IS 2" ABOVE APPARATUS BAY DOORS - SEE FOUNDATION PLAN FOR ELEVATIONS. HEIGHTS SHOWN ON ELEVATION DO NOT REFLECT 2" RAISED FLOOR FOR HEADQUARTERS. MODIFY HEIGHTS SHOWN

Aug. 7, 2014

NOT ISSUED FOR CONSTRUCTION. DATE: 00/00/14

REVISIONS

Number	Date:	Remarks:	Number	Date:	Remarks:
X	00-00-00	N/A			

CONSULTANTS

CARTER WATKINS ASSOCIATES ARCHITECTS, INC.
POST OFFICE BOX 1004
137 EAST WASHINGTON STREET
MONROE, GEORGIA 30655
Fax: 770/267-1064
email@carterwatkins.com www.carterwatkins.com

SEAL
BENJAMIN MERCER CARTER

BARTOW COUNTY
FIRE STATION NO. 9
Battalion Headquarters

SHEET TITLE:
PROPOSED FRONT AND SIDE ELEVATION

PRINTED: 00/00/00

path: \\server\shared cad\....

NUMBER:
A-2.1

Folding doors to be Four fold doors by Door Engineering and manufacturing (or equal). 14'-0" wide x 16'-0" arched top glass doors. Frame colors to be red. Provide all required accessories. Submit shop drawings. Verify mounting requirements and clearances prior to ordering. Ensure all other equipment in Apparatus bay is installed to allow door operation. Provide weatherstripping on all sides.

Provide door operators for each door. Provide power in apparatus bay room ceiling for each operator and switches (one per operator/bank of four) route to doors (switches to be at each exterior and adj. interior corridor entrances. Verify Final location with Owner. Provide 12 total openers - 2 per door operator.

NOTE: ENTIRE EXTERIOR TO BE CLEAR SEALED. SEE SPECIFICATIONS FOR SEALANT INFORMATION. BACK OF PARAPETS TO BE COVERED WITH ROOFING MEMBRANE

NOTES:

1. CORNICE TO BE E.I.F.S. COLOR TO BE SELECTED. SUBMIT SHOP DRAWINGS FOR PROFILES, ANCHORS, BENT ALUM. CAPS, AND BRACKETS.

2. EXTERIOR WALL IS REINFORCED QUIK BRIK BY OLDCASTLE OR EQUAL. ALL COLORS TO BE SELECTED. ALLOW FOR 2 EXTERIOR COLORS - PROVIDE 3/8" CONTROL JOINTS WITH BACKER ROD AND SEALANT (SEE DETAIL ON A-0.1) - VERIFY PLACEMENT WITH ACI REQUIREMENTS - IN ADDITION TO THOSE SHOWN.

3. ALL FASCIA AND FRIEZE BOARD WITH BRICK MOLD TO BE SOLID VINYL OR EQUAL. PROVIDE VENTED SOFFIT AT EAVES - TYPICAL AND SOLID SOFFITS AT ALL GABLES. COLRO TO BE SELECTED. PROVIDE ALL TRIM, ACCESSORIES. ETC. AS REQUIRED FOR INSTALLATION.

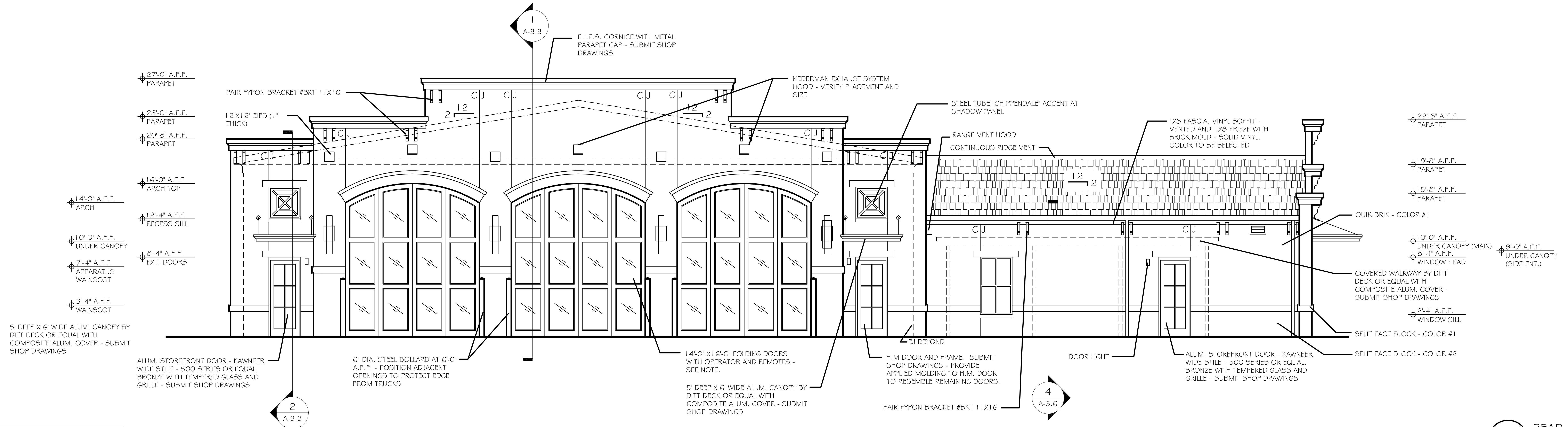
1
A-3.3
E.I.F.S. CORNICE WITH METAL PARAPET CAP - SUBMIT SHOP DRAWINGS
27'-0" A.F.F. PARAPET
23'-0" A.F.F. PARAPET
20'-8" A.F.F. PARAPET
16'-0" A.F.F. ARCH TOP
14'-0" A.F.F. ARCH
12'-4" A.F.F. RECESS SILL
10'-0" A.F.F. UNDER CANOPY
8'-4" A.F.F. EXT. DOORS
7'-4" A.F.F. APPARATUS WAINSCOT
3'-4" A.F.F. WAINSCOT
PAIR FYPON BRACKET #BKT 11X16
12"X12" EIFS (1" THICK)
CJ
12
2
NEDERMAN EXHAUST SYSTEM HOOD - VERIFY PLACEMENT AND SIZE
STEEL TUBE "CHIPPENDALE" ACCENT AT SHADOW PANEL
RANGE VENT HOOD
CONTINUOUS RIDGE VENT
1X8 FASCIA, VINYL SOFFIT - VENTED AND 1X8 FRIEZE WITH BRICK MOLD - SOLID VINYL. COLOR TO BE SELECTED
22'-8" A.F.F. PARAPET
18'-8" A.F.F. PARAPET
15'-8" A.F.F. PARAPET
QUIK BRIK - COLOR #1
10'-0" A.F.F. UNDER CANOPY (MAIN)
8'-4" A.F.F. WINDOW HEAD
9'-0" A.F.F. UNDER CANOPY (SIDE ENT.)
COVERED WALKWAY BY DITT DECK OR EQUAL WITH COMPOSITE ALUM. COVER - SUBMIT SHOP DRAWINGS
2'-4" A.F.F. WINDOW SILL
SPLIT FACE BLOCK - COLOR #1
SPLIT FACE BLOCK - COLOR #2
5' DEEP X 6' WIDE ALUM. CANOPY BY DITT DECK OR EQUAL WITH COMPOSITE ALUM. COVER - SUBMIT SHOP DRAWINGS
ALUM. STOREFRONT DOOR - KAWNEER WIDE STILE - 500 SERIES OR EQUAL. BRONZE WITH TEMPERED GLASS AND GRILLE - SUBMIT SHOP DRAWINGS
6" DIA. STEEL BOLLARD AT 6'-0" A.F.F. - POSITION ADJACENT OPENINGS TO PROTECT EDGE FROM TRUCKS
14'-0" X16'-0" FOLDING DOORS WITH OPERATOR AND REMOTES - SEE NOTE.
5' DEEP X 6' WIDE ALUM. CANOPY BY DITT DECK OR EQUAL WITH COMPOSITE ALUM. COVER - SUBMIT SHOP DRAWINGS
EJ BEYOND
H.M DOOR AND FRAME. SUBMIT SHOP DRAWINGS - PROVIDE APPLIED MOLDING TO H.M. DOOR TO RESEMBLE REMAINING DOORS.
PAIR FYPON BRACKET #BKT 11X16
DOOR LIGHT
4
A-3.6
ALUM. STOREFRONT DOOR - KAWNEER WIDE STILE - 500 SERIES OR EQUAL. BRONZE WITH TEMPERED GLASS AND GRILLE - SUBMIT SHOP DRAWINGS
2
A-3.3

1 / A-2.2 REAR ELEVATION (SOUTH)
SCALE 3/16" = 1'-0"

NOTE:

ALL GUTTERS AND DOWNSPOUTS TO BE 26 GAUGE STEEL WITH KYNAR FINISH. PROVIDE METAL GUTTER GUARDS WITH FACTORY BAKED-ENAMEL FINISH WITH CONCEALED SPLICE JOINTS. COLOR OF DOWNSPOUTS AND COLOR OF GUTTERS TO BE SELECTED (MAY BE TWO COLORS). GUTTERS TO 6" SQUARE BOX GUTTERS. MATCH PROFILES SHOWN AND DOWN SPOUTS TO BE 5" DIAMETER ROUND. GUTTERS AND DOWN SPOUTS TO BE COMPLETE ENGINEERED RAIN/WATER HANDLING SYSTEM WITH APPROPRIATE POSITIVE DRAINAGE, DOWN SPOUTS, WALL ANCHORS, AND OTHER COMPONENTS NECESSARY FOR COMPLETE AND OPERABLE SYSTEM. DOWN SPOUTS TO BE ANCHORED TO BUILDING IN A MANNER THAT PROVIDES ADEQUATE STABILITY. SUBMIT ANCHORS FOR APPROVAL. COLOR TO BE SELECTED. SUBMIT COLOR CHART

ALL EXPOSED MASONRY (FRONT AND BACK OF PARAPETS, ETC) TO BE WATER-PROOFED WITH A MINIMUM OF TWO COATS WATERPROOFING. PROVIDE 10 YEAR WARRANTY.

NOTE: CONTROL JOINTS TO BE LOCATED BEHIND DOWNSPOUTS

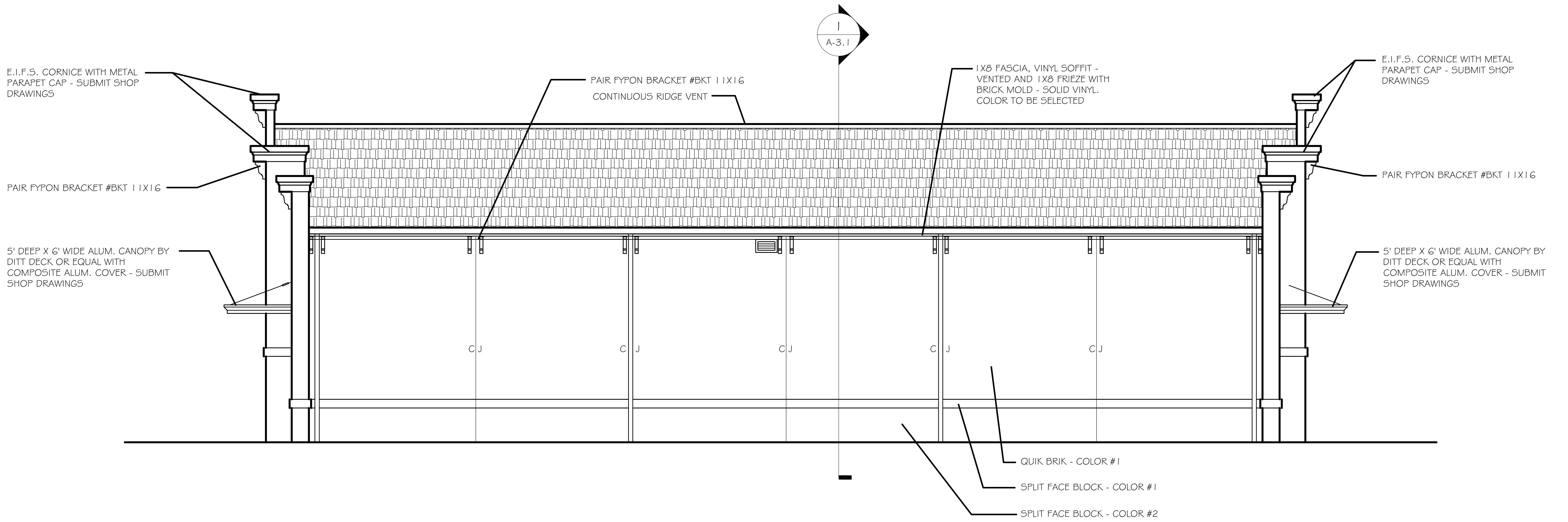
1
A-3.1
E.I.F.S. CORNICE WITH METAL PARAPET CAP - SUBMIT SHOP DRAWINGS
PAIR FYPON BRACKET #BKT 11X16
CONTINUOUS RIDGE VENT
1X8 FASCIA, VINYL SOFFIT - VENTED AND 1X8 FRIEZE WITH BRICK MOLD - SOLID VINYL. COLOR TO BE SELECTED
E.I.F.S. CORNICE WITH METAL PARAPET CAP - SUBMIT SHOP DRAWINGS
PAIR FYPON BRACKET #BKT 11X16
PAIR FYPON BRACKET #BKT 11X16
5' DEEP X 6' WIDE ALUM. CANOPY BY DITT DECK OR EQUAL WITH COMPOSITE ALUM. COVER - SUBMIT SHOP DRAWINGS
5' DEEP X 6' WIDE ALUM. CANOPY BY DITT DECK OR EQUAL WITH COMPOSITE ALUM. COVER - SUBMIT SHOP DRAWINGS
CJ
QUIK BRIK - COLOR #1
SPLIT FACE BLOCK - COLOR #1
SPLIT FACE BLOCK - COLOR #2

2 / A-2.2 SIDE ELEVATION (WEST)
SCALE 3/16" = 1'-0"

NOTE: FLASHING AND WEEPHOLES IN MASONRY VENEER

1. FLASHING AND WEEPHOLES SHALL BE LOCATED IN THE FIRST COURSE OF MASONRY ABOVE FINISHED GROUND LEVEL ABOVE THE FOUNDATION WALL OR SLAB, AND OTHER POINTS OF SUPPORT, INCLUDING STRUCTURAL FLOORS, SHELF ANGLES, AND LINTELS WHERE ANCHORED VENEERS ARE USED. (2000 INTERNATIONAL BUILDING CODE - SECTION 1405.3.2)(APPROX. 8")

2. WEEP HOLES PROVIDED IN THE OUTSIDE WYTHE OF MASONRY WALLS SHALL BE AT A MAXIMUM SPACING OF 33 INCHES ON CENTER. WEEP HOLES SHALL NOT BE LESS THAN 3/16" IN DIAMETER. (2000 INTERNATIONAL BUILDING CODE - SECTION - 2104.1.8)

3. FLASHING AT GRADE LEVEL TO BE 40 MIL NEOPRENE FLASHING OR EQUAL.

NOTE: CONTRACTOR TO BE REPONSIBLE FOR ALL MEANS AND METHODS OF MASONRY WATERPROOFING DURING CONSTRUCTION.

NOTE: FINISH FLOOR OF HEADQUARTERS IS 2" ABOVE APPARATUS BAY DOORS - SEE FOUNDATION PLAN FOR ELEVATIONS. HEIGHTS SHOWN ON ELEVATION DO NOT REFLECT 2" RAISED FLOOR FOR HEADQUARTERS. MODIFY HEIGHTS SHOWN

Aug. 7, 2014

REVISIONS

Number	Date:	Remarks:	Number	Date:	Remarks:
X	00-00-00	N/A			

CONSULTANTS

CARTER WATKINS ASSOCIATES ARCHITECTS, INC.
POST OFFICE BOX 1004
137 EAST WASHINGTON STREET
MONROE, GEORGIA 30655
Fax: 770/267-1064
email@carterwatkins.com www.carterwatkins.com

SEAL
BENJAMIN MERCER CARTER

BARTOW COUNTY
FIRE STATION NO. 9
Battalion Headquarters

SHEET TITLE:
PROPOSED REAR AND SIDE ELEVATION

PRINTED: 00/00/00

path: \\server\shared cad\....

NUMBER:
A-2.2

ISSUED FOR CONSTRUCTION. DATE: 00 / 00 / 14

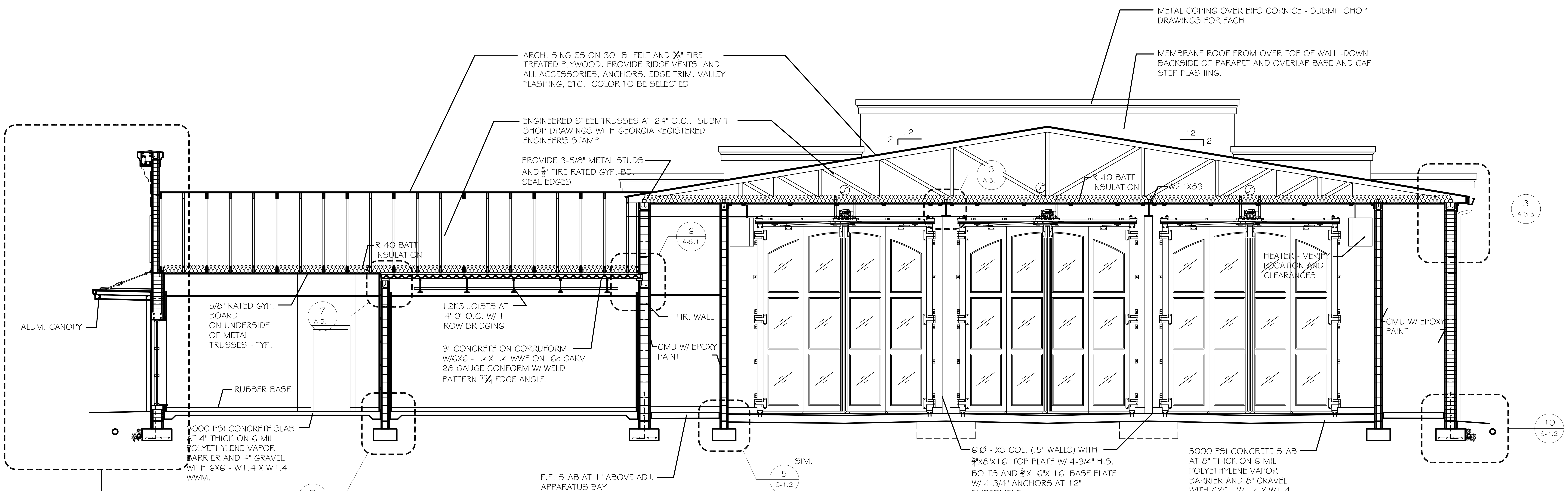
ARCH. SINGLES ON 30 LB. FELT AND ⅝" FIRE TREATED PLYWOOD. PROVIDE RIDGE VENTS AND ALL ACCESSORIES, ANCHORS, EDGE TRIM. VALLEY FLASHING, ETC. COLOR TO BE SELECTED
ENGINEERED STEEL TRUSSES AT 24" O.C.. SUBMIT SHOP DRAWINGS WITH GEORGIA REGISTERED ENGINEER'S STAMP
PROVIDE 3-5/8" METAL STUDS AND ⅝" FIRE RATED GYP. BD. - SEAL EDGES
METAL COPING OVER EIFS CORNICE - SUBMIT SHOP DRAWINGS FOR EACH
MEMBRANE ROOF FROM OVER TOP OF WALL -DOWN BACKSIDE OF PARAPET AND OVERLAP BASE AND CAP STEP FLASHING.
2 12
12 2
3 A-5.1
R-40 BATT INSULATION
W21X83
3 A-3.5
R-40 BATT INSULATION
6 A-5.1
HEATER - VERIFY LOCATION AND CLEARANCES
ALUM. CANOPY
5/8" RATED GYP. BOARD ON UNDERSIDE OF METAL TRUSSES - TYP.
7 A-5.1
12K3 JOISTS AT 4'-0" O.C. W/ 1 ROW BRIDGING
1 HR. WALL
CMU W/ EPOXY PAINT
3" CONCRETE ON CORRUFORM W/6X6 -1.4X1.4 WWF ON .6c GAKV 28 GAUGE CONFORM W/ WELD PATTERN 30/4 EDGE ANGLE.
CMU W/ EPOXY PAINT
RUBBER BASE
3000 PSI CONCRETE SLAB AT 4" THICK ON 6 MIL POLYETHYLENE VAPOR BARRIER AND 4" GRAVEL WITH 6X6 - W1.4 X W1.4 WWM.
10 S-1.2
SIM.
5 S-1.2
F.F. SLAB AT 1" ABOVE ADJ. APPARATUS BAY
6"Ø - XS COL. (.5" WALLS) WITH ¾"X8"X16" TOP PLATE W/ 4-3/4" H.S. BOLTS AND ¾"X16"X 16" BASE PLATE W/ 4-3/4" ANCHORS AT 12" EMBEDMENT
5000 PSI CONCRETE SLAB AT 8" THICK ON 6 MIL POLYETHYLENE VAPOR BARRIER AND 8" GRAVEL WITH 6X6 - W1.4 X W1.4 WWM AND FIBERGLASS REINFORCING.
3 A-3.4
7 S-1.2

1 A-3.1 TRANSVERSE SECTION

SCALE: 1/4" = 1'-0"

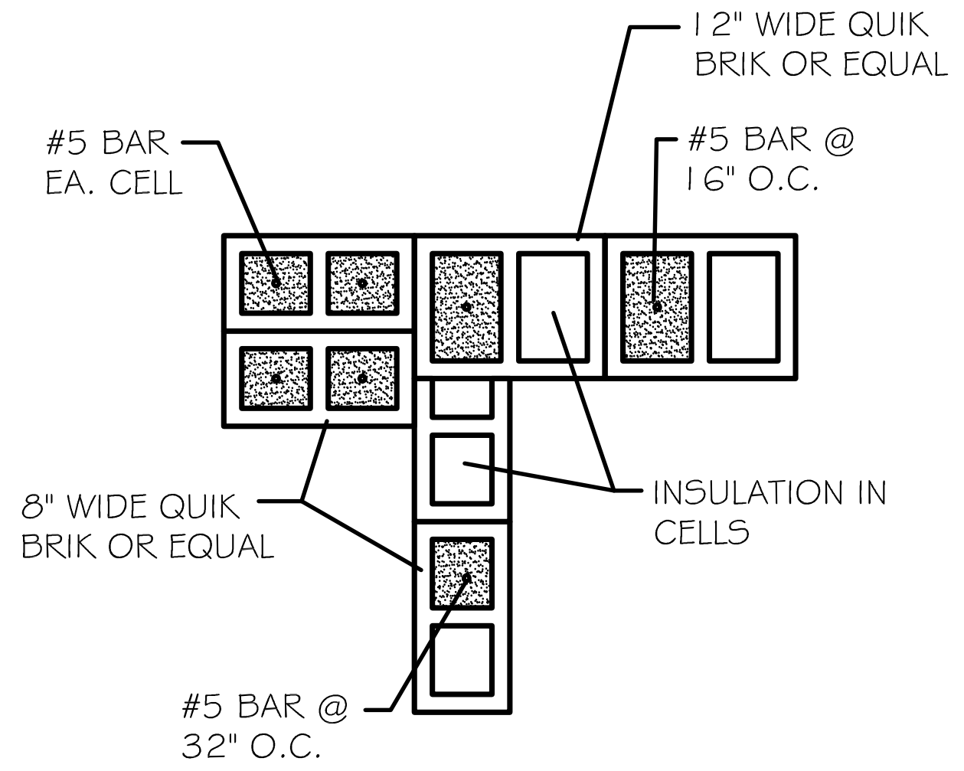
12" WIDE QUIK BRIK OR EQUAL
#5 BAR EA. CELL
#5 BAR @ 16" O.C.
8" WIDE QUIK BRIK OR EQUAL
INSULATION IN CELLS
#5 BAR @ 32" O.C.

2 A-3.1 CORNER DETAIL

SCALE: 3/4" = 1'-0"

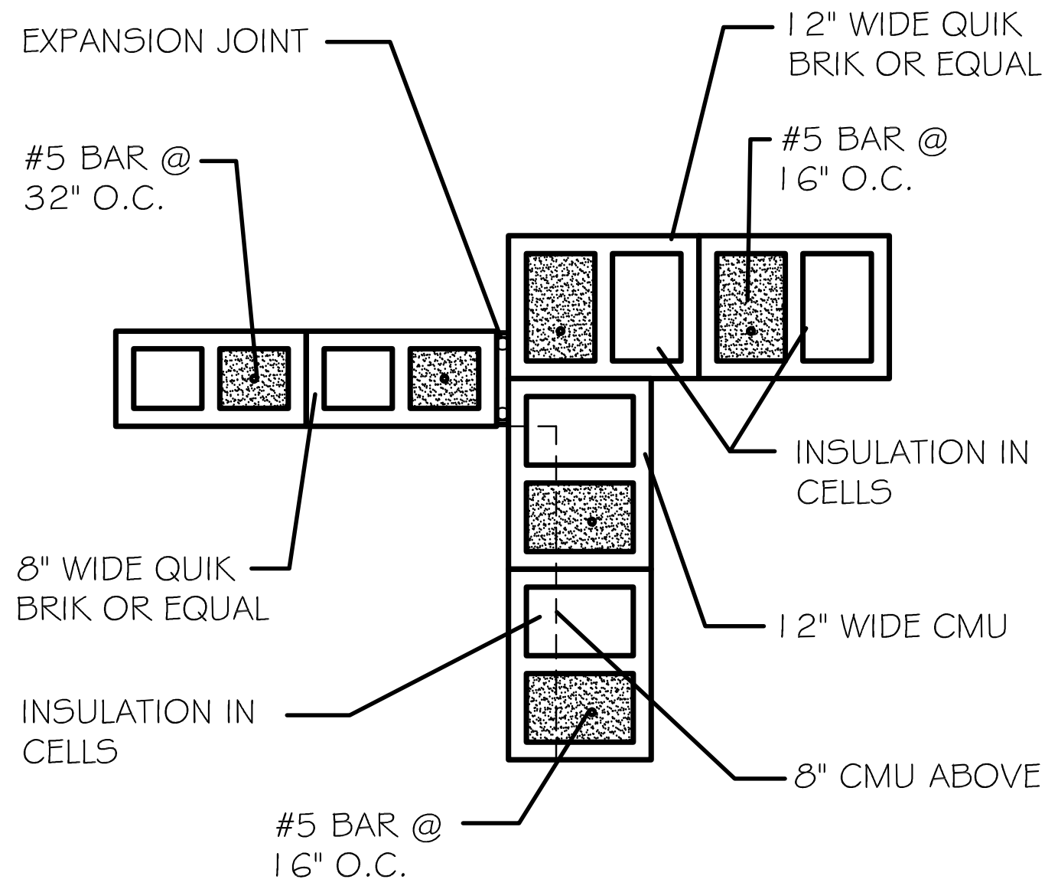
EXPANSION JOINT
12" WIDE QUIK BRIK OR EQUAL
#5 BAR @ 32" O.C.
#5 BAR @ 16" O.C.
INSULATION IN CELLS
8" WIDE QUIK BRIK OR EQUAL
12" WIDE CMU
INSULATION IN CELLS
8" CMU ABOVE
#5 BAR @ 16" O.C.

3 A-3.1 CORNER DETAIL

SCALE: 1/4" = 1'-0"

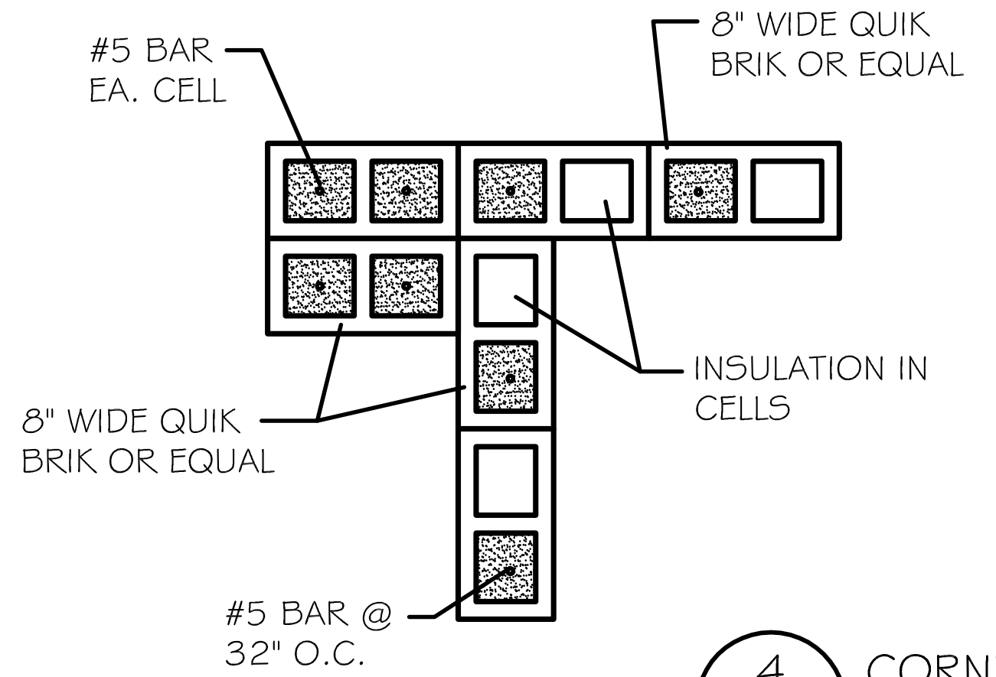
#5 BAR EA. CELL
8" WIDE QUIK BRIK OR EQUAL
INSULATION IN CELLS
8" WIDE QUIK BRIK OR EQUAL
#5 BAR @ 32" O.C.

4 A-3.1 CORNER DETAIL

SCALE: 1/4" = 1'-0"

NOTE:
1. PROVIDE DUR-O-WALL HORIZ. TRUSS AT 16" O.C. VERTICAL

2. GROUT ALL CELLS

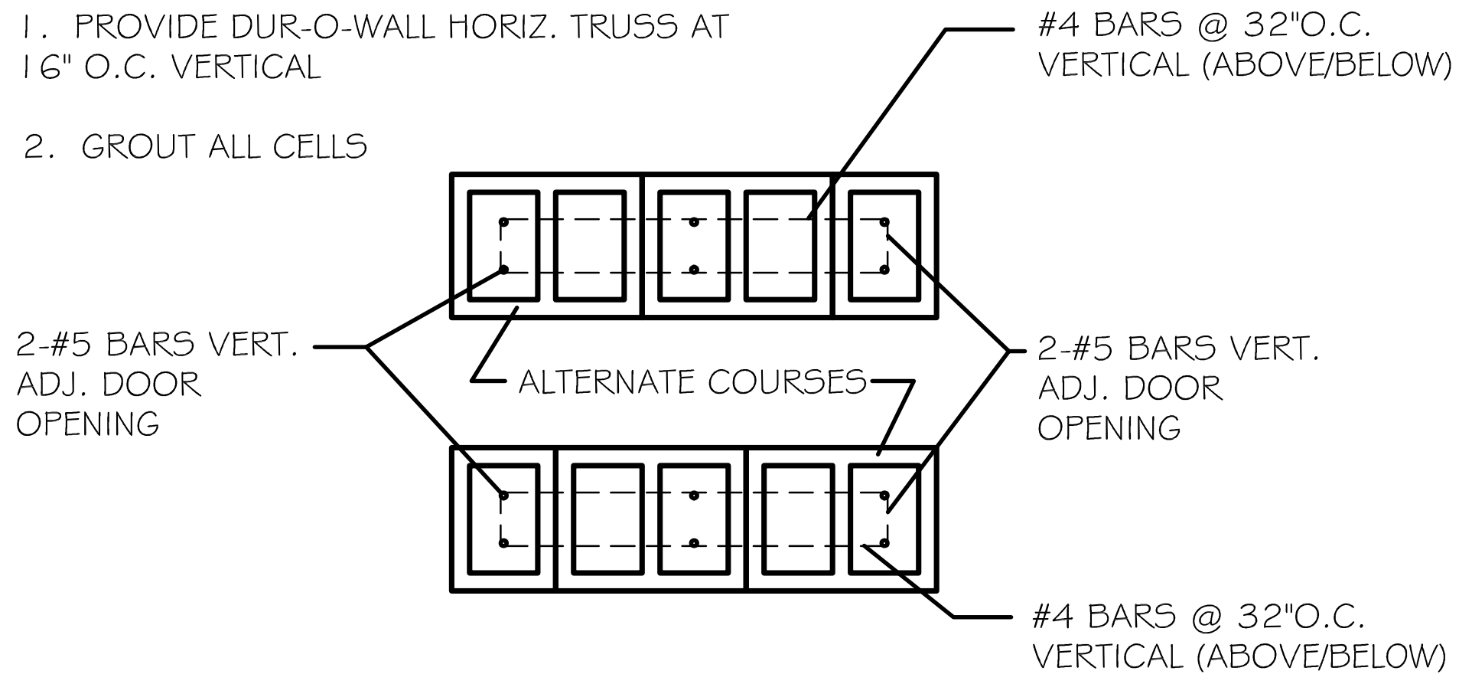
#4 BARS @ 32"O.C. VERTICAL (ABOVE/BELOW)
2-#5 BARS VERT. ADJ. DOOR OPENING
ALTERNATE COURSES
2-#5 BARS VERT. ADJ. DOOR OPENING
#4 BARS @ 32"O.C. VERTICAL (ABOVE/BELOW)

5 A-3.1 PILASTER DETAIL

SCALE: 1/4" = 1'-0"

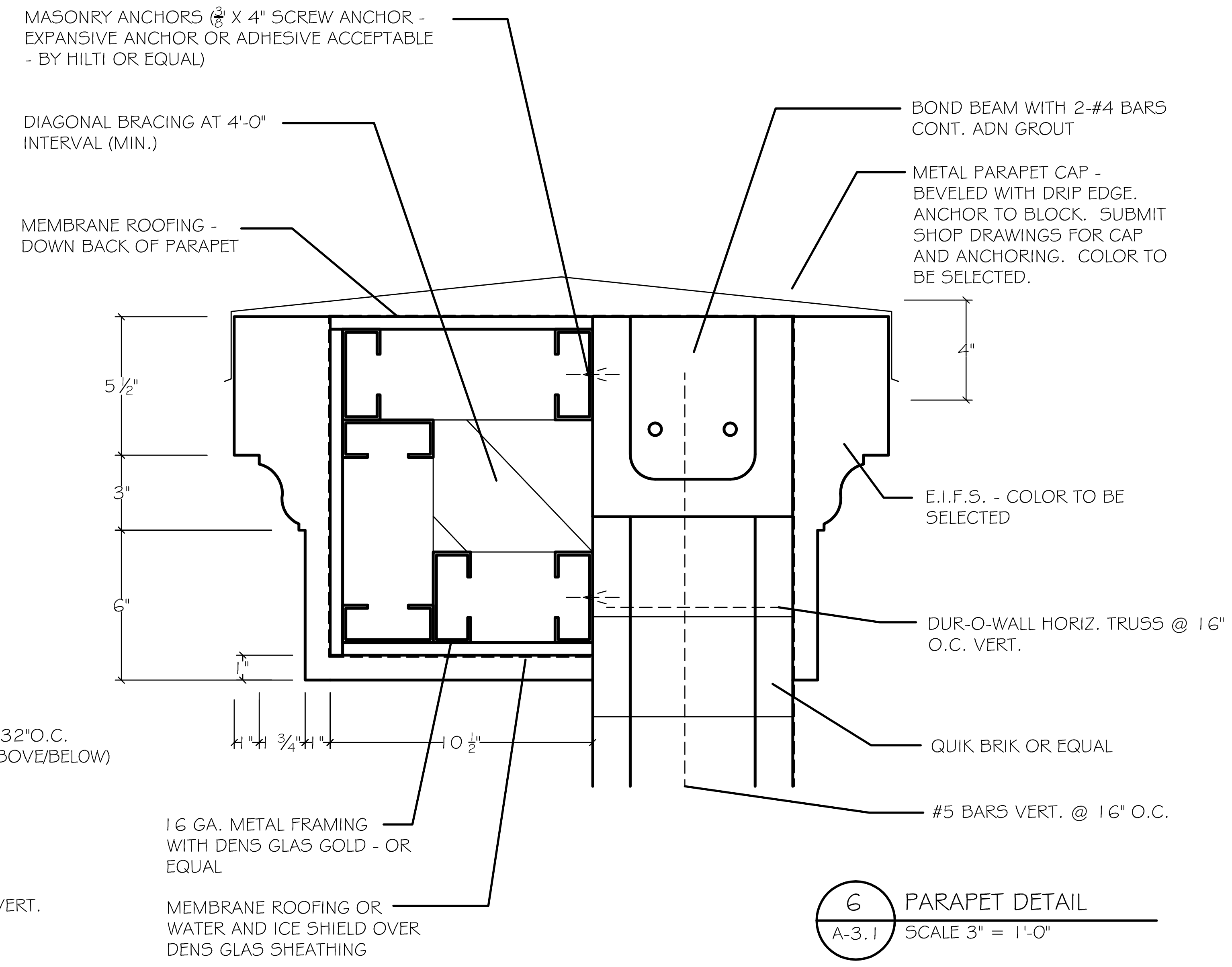
MASONRY ANCHORS (⅜" X 4" SCREW ANCHOR - EXPANSIVE ANCHOR OR ADHESIVE ACCEPTABLE - BY HILTI OR EQUAL)
DIAGONAL BRACING AT 4'-0" INTERVAL (MIN.)
MEMBRANE ROOFING - DOWN BACK OF PARAPET
BOND BEAM WITH 2-#4 BARS CONT. ADN GROUT
METAL PARAPET CAP - BEVELED WITH DRIP EDGE. ANCHOR TO BLOCK. SUBMIT SHOP DRAWINGS FOR CAP AND ANCHORING. COLOR TO BE SELECTED.
4"
5½"
3"
6"
1"
E.I.F.S. - COLOR TO BE SELECTED
DUR-O-WALL HORIZ. TRUSS @ 16" O.C. VERT.
1" 1 ¾" 1" 10½"
QUIK BRIK OR EQUAL
#5 BARS VERT. @ 16" O.C.
16 GA. METAL FRAMING WITH DENS GLAS GOLD - OR EQUAL
MEMBRANE ROOFING OR WATER AND ICE SHIELD OVER DENS GLAS SHEATHING

6 A-3.1 PARAPET DETAIL

SCALE 3" = 1'-0"

NOTE: WINDOWS TO BE ALUM. STOREFRONT KAWNEER 451-T WINDOW OR EQUAL WITH 1" INSUL. GLASS AND LOW "E" WITH GREEN TINT. FRAME COLOR TO BE DARK BRONZE ANODIZED. SUBMIT SHOP DRAWINGS AND SAMPLES FOR REVIEW.

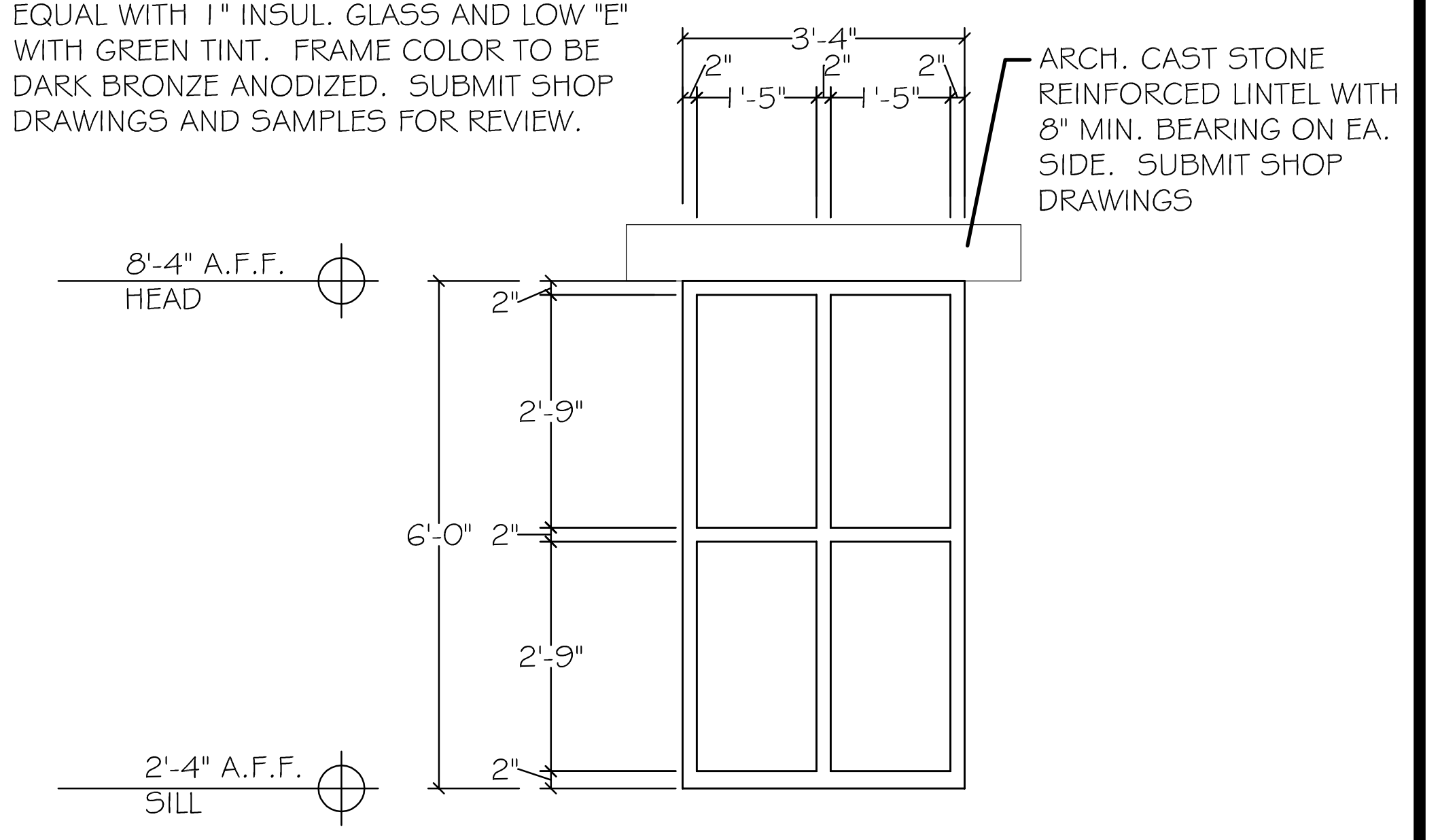
3'-4"
2" 2" 2"
1'-5" 1'-5"
ARCH. CAST STONE REINFORCED LINTEL WITH 8" MIN. BEARING ON EA. SIDE. SUBMIT SHOP DRAWINGS
8'-4" A.F.F. HEAD
2"
2'-9"
6'-0" 2"
2'-9"
2"
2'-4" A.F.F. SILL

7 A-3.1 WINDOW

SCALE 1/2" = 1'-0"

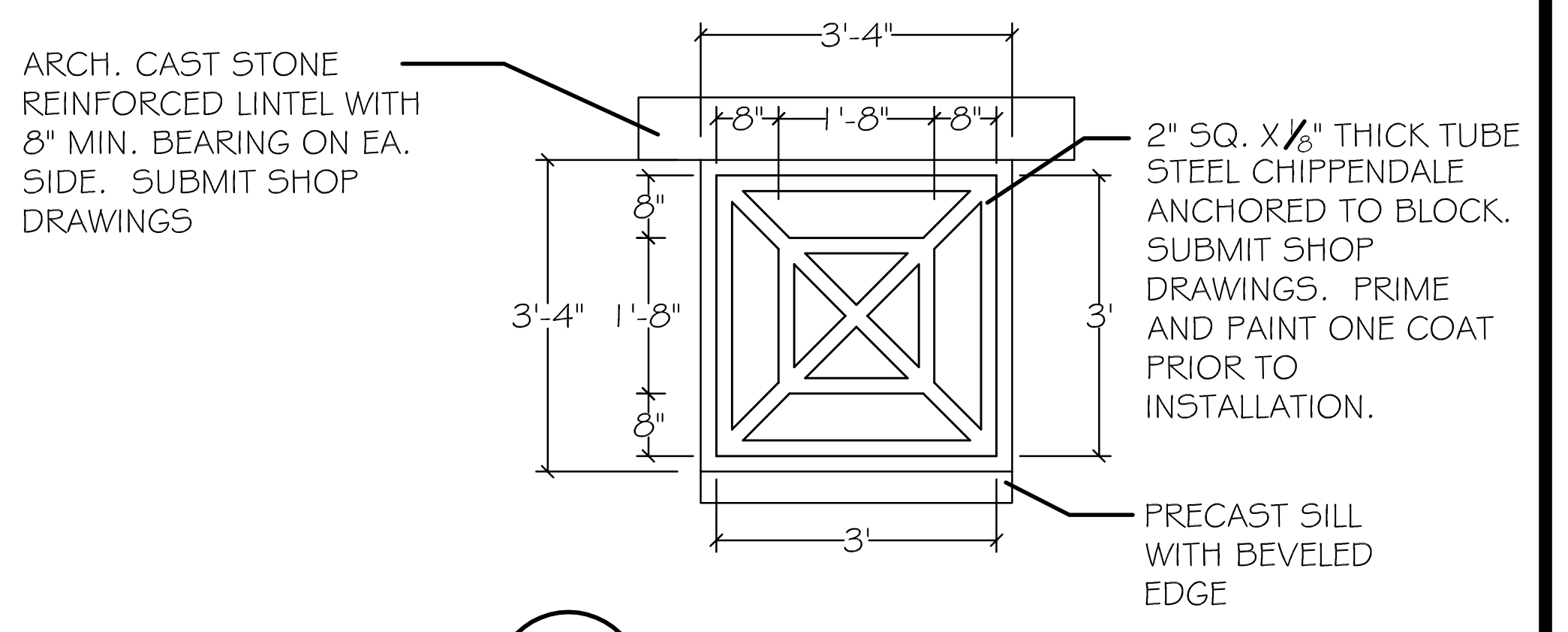
ARCH. CAST STONE REINFORCED LINTEL WITH 8" MIN. BEARING ON EA. SIDE. SUBMIT SHOP DRAWINGS
3'-4"
8" 1'-8" 8"
8"
3'-4" 1'-8"
8"
3'
3'
2" SQ. X⅛" THICK TUBE STEEL CHIPPENDALE ANCHORED TO BLOCK. SUBMIT SHOP DRAWINGS. PRIME AND PAINT ONE COAT PRIOR TO INSTALLATION.
PRECAST SILL WITH BEVELED EDGE

8 A-3.1 CHIPPENDALE ACCENT

SCALE 1/2" = 1'-0"

ISSUED FOR CONSTRUCTION. DATE: 10 / 21 / 09

REVISIONS

Number	Date:	Remarks:	Number	Date:	Remarks:
X	00-00-00	N/A			

CONSULTANTS

Carter Watkins Associates Architects, Inc.
POST OFFICE BOX 1004
137 EAST WASHINGTON STREET
MONROE, GEORGIA 30655
Fax: 770/267-1064
email@carterwatkins.com www.carterwatkins.com

SEAL
BENJAMIN MERCER CARTER

BARTOW COUNTY FIRE
STATION NO. 9
Battalion Headquarters

SHEET TITLE:
TRANSVERSE SECTION AND DETAILS

PRINTED:

NUMBER:
A-3.1

NOTE: RIGID INSULATION TO BE FULL HEIGHT OF WALL. TAPE JOINT AT GREEN BOARD ON UNDERSIDE OF TRUSSES AND INSULATION - TYPICAL.

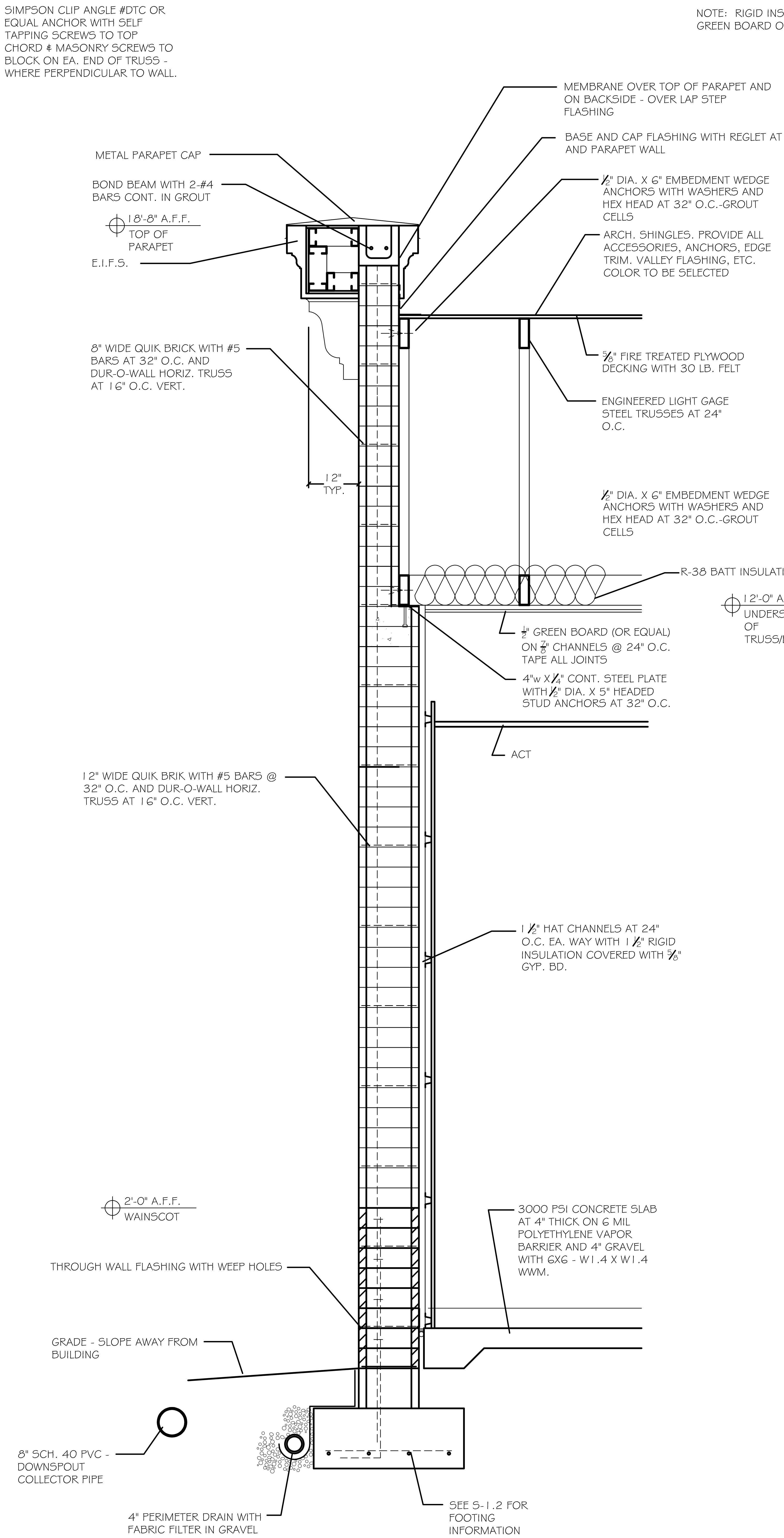
SIMPSON CLIP ANGLE #DTC OR EQUAL ANCHOR WITH SELF TAPPING SCREWS TO TOP CHORD & MASONRY SCREWS TO BLOCK ON EA. END OF TRUSS - WHERE PERPENDICULAR TO WALL.
MEMBRANE OVER TOP OF PARAPET AND ON BACKSIDE - OVER LAP STEP FLASHING
BASE AND CAP FLASHING WITH REGLET AT ROOF AND PARAPET WALL
METAL PARAPET CAP
BOND BEAM WITH 2-#4 BARS CONT. IN GROUT
½" DIA. X 6" EMBEDMENT WEDGE ANCHORS WITH WASHERS AND HEX HEAD AT 32" O.C.-GROUT CELLS
18'-8" A.F.F. TOP OF PARAPET
ARCH. SHINGLES. PROVIDE ALL ACCESSORIES, ANCHORS, EDGE TRIM, VALLEY FLASHING, ETC. COLOR TO BE SELECTED
E.I.F.S.
8" WIDE QUIK BRICK WITH #5 BARS AT 32" O.C. AND DUR-O-WALL HORIZ. TRUSS AT 16" O.C. VERT.
⅝" FIRE TREATED PLYWOOD DECKING WITH 30 LB. FELT
ENGINEERED LIGHT GAGE STEEL TRUSSES AT 24" O.C.
12" TYP.
½" DIA. X 6" EMBEDMENT WEDGE ANCHORS WITH WASHERS AND HEX HEAD AT 32" O.C.-GROUT CELLS
R-38 BATT INSULATION
12'-0" A.F.F. UNDERSIDE OF TRUSS/EAVE
½" GREEN BOARD (OR EQUAL) ON ⅞" CHANNELS @ 24" O.C. TAPE ALL JOINTS
4"w X ½" CONT. STEEL PLATE WITH ½" DIA. X 5" HEADED STUD ANCHORS AT 32" O.C.
ACT
12" WIDE QUIK BRIK WITH #5 BARS @ 32" O.C. AND DUR-O-WALL HORIZ. TRUSS AT 16" O.C. VERT.
1 ½" HAT CHANNELS AT 24" O.C. EA. WAY WITH 1 ½" RIGID INSULATION COVERED WITH ⅝" GYP. BD.
2'-0" A.F.F. WAINSCOT
3000 PSI CONCRETE SLAB AT 4" THICK ON 6 MIL POLYETHYLENE VAPOR BARRIER AND 4" GRAVEL WITH 6X6 - W1.4 X W1.4 WWM.
THROUGH WALL FLASHING WITH WEEP HOLES
GRADE - SLOPE AWAY FROM BUILDING
8" SCH. 40 PVC - DOWNSPOUT COLLECTOR PIPE
4" PERIMETER DRAIN WITH FABRIC FILTER IN GRAVEL
SEE S-1.2 FOR FOOTING INFORMATION

1 A-3.2 HEADQUARTERS SIDE WALL SECTION

SCALE: 1" = 1'-0"

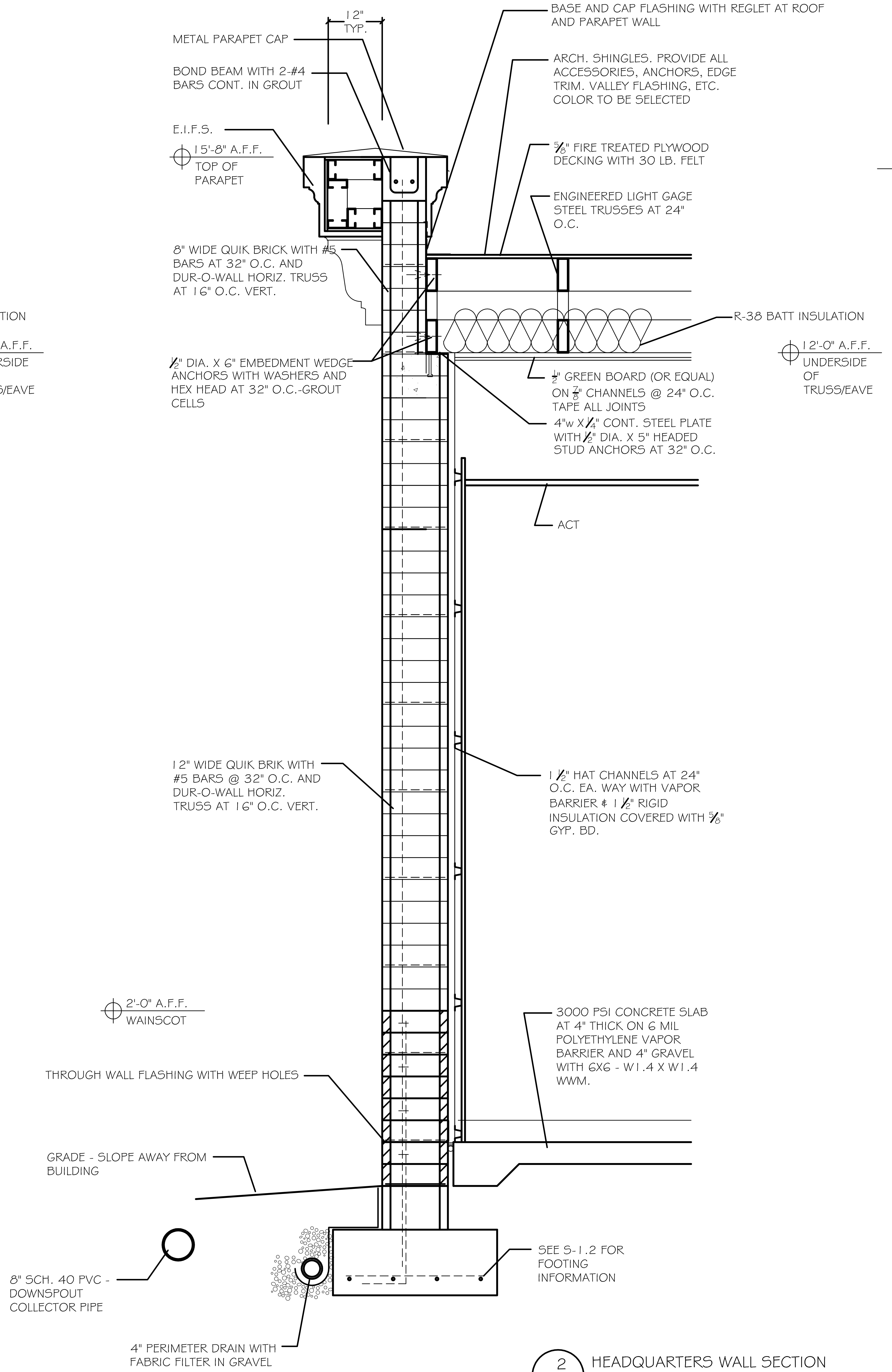
12" TYP.
METAL PARAPET CAP
BASE AND CAP FLASHING WITH REGLET AT ROOF AND PARAPET WALL
BOND BEAM WITH 2-#4 BARS CONT. IN GROUT
ARCH. SHINGLES. PROVIDE ALL ACCESSORIES, ANCHORS, EDGE TRIM, VALLEY FLASHING, ETC. COLOR TO BE SELECTED
E.I.F.S.
15'-8" A.F.F. TOP OF PARAPET
⅝" FIRE TREATED PLYWOOD DECKING WITH 30 LB. FELT
ENGINEERED LIGHT GAGE STEEL TRUSSES AT 24" O.C.
8" WIDE QUIK BRICK WITH #5 BARS AT 32" O.C. AND DUR-O-WALL HORIZ. TRUSS AT 16" O.C. VERT.
R-38 BATT INSULATION
½" DIA. X 6" EMBEDMENT WEDGE ANCHORS WITH WASHERS AND HEX HEAD AT 32" O.C.-GROUT CELLS
12'-0" A.F.F. UNDERSIDE OF TRUSS/EAVE
½" GREEN BOARD (OR EQUAL) ON ⅞" CHANNELS @ 24" O.C. TAPE ALL JOINTS
4"w X ½" CONT. STEEL PLATE WITH ½" DIA. X 5" HEADED STUD ANCHORS AT 32" O.C.
ACT
12" WIDE QUIK BRIK WITH #5 BARS @ 32" O.C. AND DUR-O-WALL HORIZ. TRUSS AT 16" O.C. VERT.
1 ½" HAT CHANNELS AT 24" O.C. EA. WAY WITH VAPOR BARRIER & 1 ½" RIGID INSULATION COVERED WITH ⅝" GYP. BD.
2'-0" A.F.F. WAINSCOT
3000 PSI CONCRETE SLAB AT 4" THICK ON 6 MIL POLYETHYLENE VAPOR BARRIER AND 4" GRAVEL WITH 6X6 - W1.4 X W1.4 WWM.
THROUGH WALL FLASHING WITH WEEP HOLES
GRADE - SLOPE AWAY FROM BUILDING
8" SCH. 40 PVC - DOWNSPOUT COLLECTOR PIPE
SEE S-1.2 FOR FOOTING INFORMATION
4" PERIMETER DRAIN WITH FABRIC FILTER IN GRAVEL

2 A-3.2 HEADQUARTERS WALL SECTION

SCALE: 1" = 1'-0"

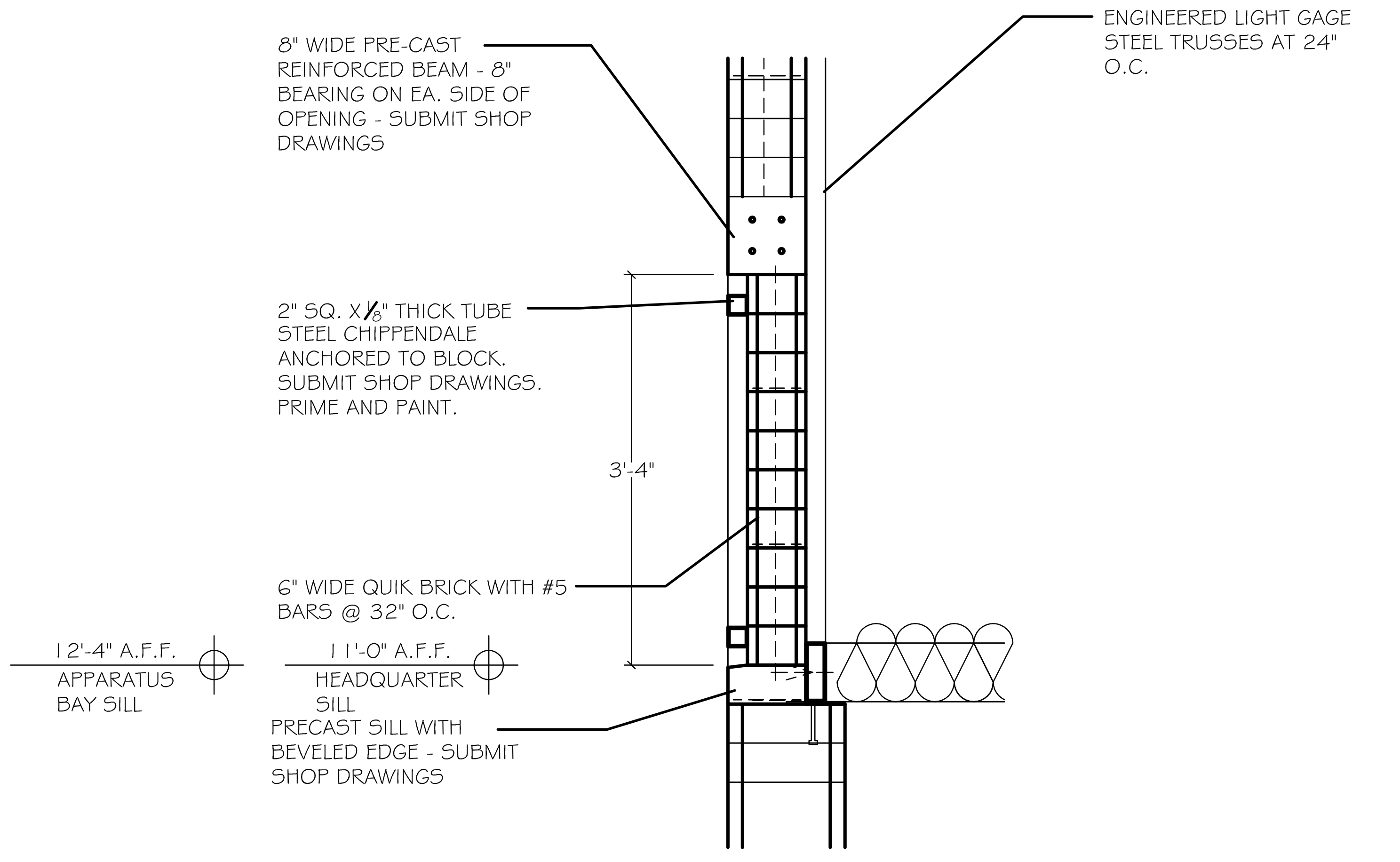
8" WIDE PRE-CAST REINFORCED BEAM - 8" BEARING ON EA. SIDE OF OPENING - SUBMIT SHOP DRAWINGS
ENGINEERED LIGHT GAGE STEEL TRUSSES AT 24" O.C.
2" SQ. X ⅛" THICK TUBE STEEL CHIPPENDALE ANCHORED TO BLOCK. SUBMIT SHOP DRAWINGS. PRIME AND PAINT.
3'-4"
6" WIDE QUIK BRICK WITH #5 BARS @ 32" O.C.
12'-4" A.F.F. APPARATUS BAY SILL
11'-0" A.F.F. HEADQUARTER SILL
PRECAST SILL WITH BEVELED EDGE - SUBMIT SHOP DRAWINGS

3 A-3.2 CHIPPENDALE SECTION

SCALE: 1" = 1'-0"

REVISIONS

Number	Date:	Remarks:	Number	Date:	Remarks:
X	00-00-00	N/A			

CONSULTANTS

CARTER WATKINS ASSOCIATES
ARCHITECTS, INC.
POST OFFICE BOX 1004
137 EAST WASHINGTON STREET
MONROE, GEORGIA 30655
Fax: 770/267-1064
email@carterwatkins.com www.carterwatkins.com

SEAL

BENJAMIN MERCER CARTER
CERTIFICATE NO. 009277

Ben M. Carter

BARTOW COUNTY FIRE
STATION NO. 9
Battalion Headquarters

SHEET TITLE:
WALL SECTIONS

PRINTED:

NUMBER:
A-3.2

ISSUED FOR CONSTRUCTION. DATE: 10 / 21 / 09

NOTE: PROVIDE PEEL AND STICK FLASHING UNDER ALL BASE FLASHING AT ROOF / WALL TRANSITION

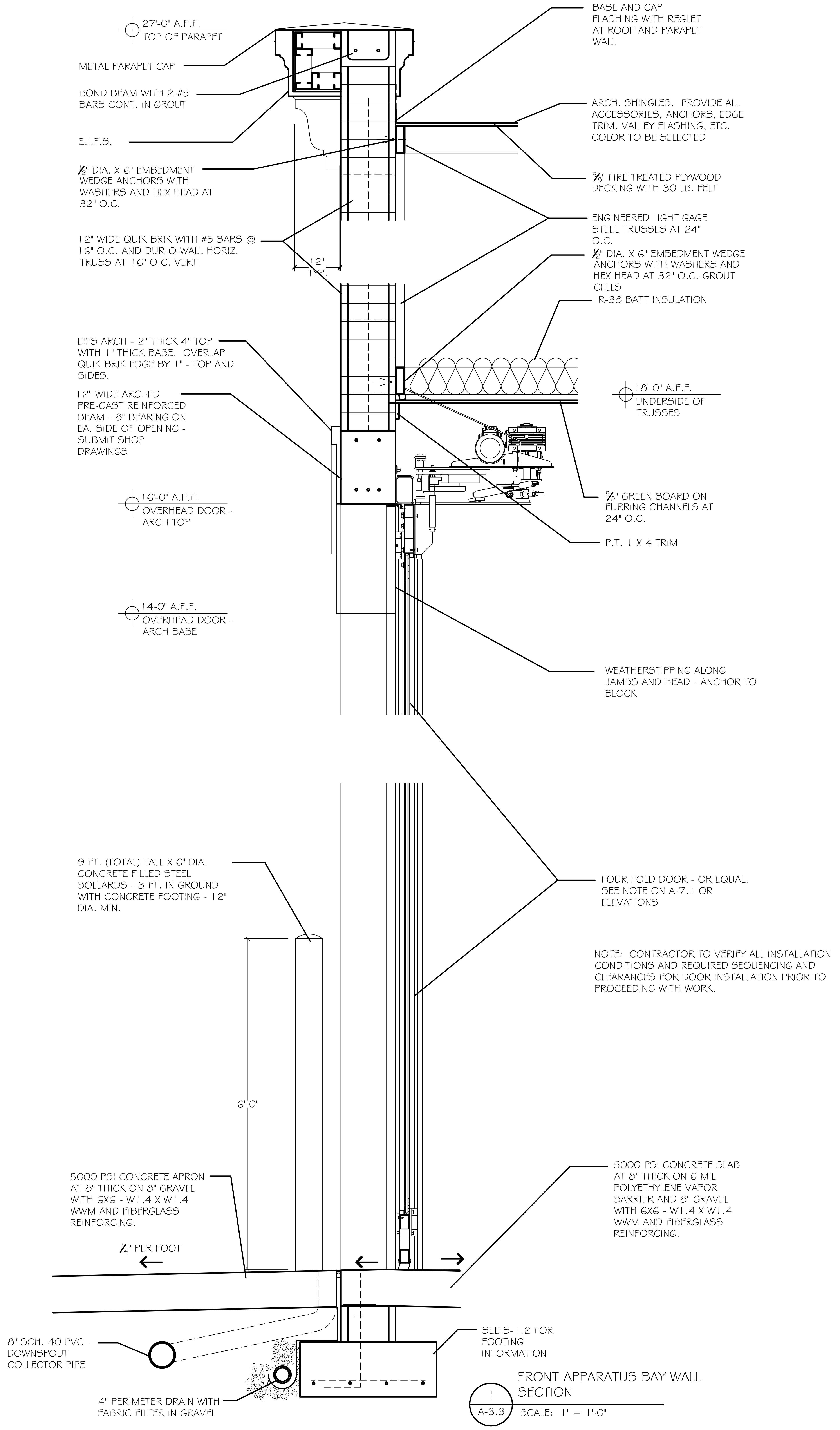
27'-0" A.F.F.
TOP OF PARAPET
METAL PARAPET CAP
BOND BEAM WITH 2-#5 BARS CONT. IN GROUT
E.I.F.S.
½" DIA. X 6" EMBEDMENT WEDGE ANCHORS WITH WASHERS AND HEX HEAD AT 32" O.C.
12" WIDE QUIK BRIK WITH #5 BARS @ 16" O.C. AND DUR-O-WALL HORIZ. TRUSS AT 16" O.C. VERT.
12" TYP.
BASE AND CAP FLASHING WITH REGLET AT ROOF AND PARAPET WALL
ARCH. SHINGLES. PROVIDE ALL ACCESSORIES, ANCHORS, EDGE TRIM. VALLEY FLASHING, ETC. COLOR TO BE SELECTED
⅝" FIRE TREATED PLYWOOD DECKING WITH 30 LB. FELT
ENGINEERED LIGHT GAGE STEEL TRUSSES AT 24" O.C.
½" DIA. X 6" EMBEDMENT WEDGE ANCHORS WITH WASHERS AND HEX HEAD AT 32" O.C.-GROUT CELLS
R-38 BATT INSULATION
EIFS ARCH - 2" THICK 4" TOP WITH 1" THICK BASE. OVERLAP QUIK BRIK EDGE BY 1" - TOP AND SIDES.
12" WIDE ARCHED PRE-CAST REINFORCED BEAM - 8" BEARING ON EA. SIDE OF OPENING - SUBMIT SHOP DRAWINGS
18'-0" A.F.F.
UNDERSIDE OF TRUSSES
16'-0" A.F.F.
OVERHEAD DOOR - ARCH TOP
⅝" GREEN BOARD ON FURRING CHANNELS AT 24" O.C.
P.T. 1 X 4 TRIM
14-0" A.F.F.
OVERHEAD DOOR - ARCH BASE
WEATHERSTIPPING ALONG JAMBS AND HEAD - ANCHOR TO BLOCK
FOUR FOLD DOOR - OR EQUAL. SEE NOTE ON A-7.1 OR ELEVATIONS
9 FT. (TOTAL) TALL X 6" DIA. CONCRETE FILLED STEEL BOLLARDS - 3 FT. IN GROUND WITH CONCRETE FOOTING - 12" DIA. MIN.
6'-0"
5000 PSI CONCRETE APRON AT 8" THICK ON 8" GRAVEL WITH 6X6 - W1.4 X W1.4 WWM AND FIBERGLASS REINFORCING.
¼" PER FOOT
5000 PSI CONCRETE SLAB AT 8" THICK ON 6 MIL POLYETHYLENE VAPOR BARRIER AND 8" GRAVEL WITH 6X6 - W1.4 X W1.4 WWM AND FIBERGLASS REINFORCING.
8" SCH. 40 PVC - DOWNSPOUT COLLECTOR PIPE
SEE S-1.2 FOR FOOTING INFORMATION
4" PERIMETER DRAIN WITH FABRIC FILTER IN GRAVEL

NOTE: CONTRACTOR TO VERIFY ALL INSTALLATION CONDITIONS AND REQUIRED SEQUENCING AND CLEARANCES FOR DOOR INSTALLATION PRIOR TO PROCEEDING WITH WORK.

1
A-3.3
FRONT APPARATUS BAY WALL SECTION
SCALE: 1" = 1'-0"

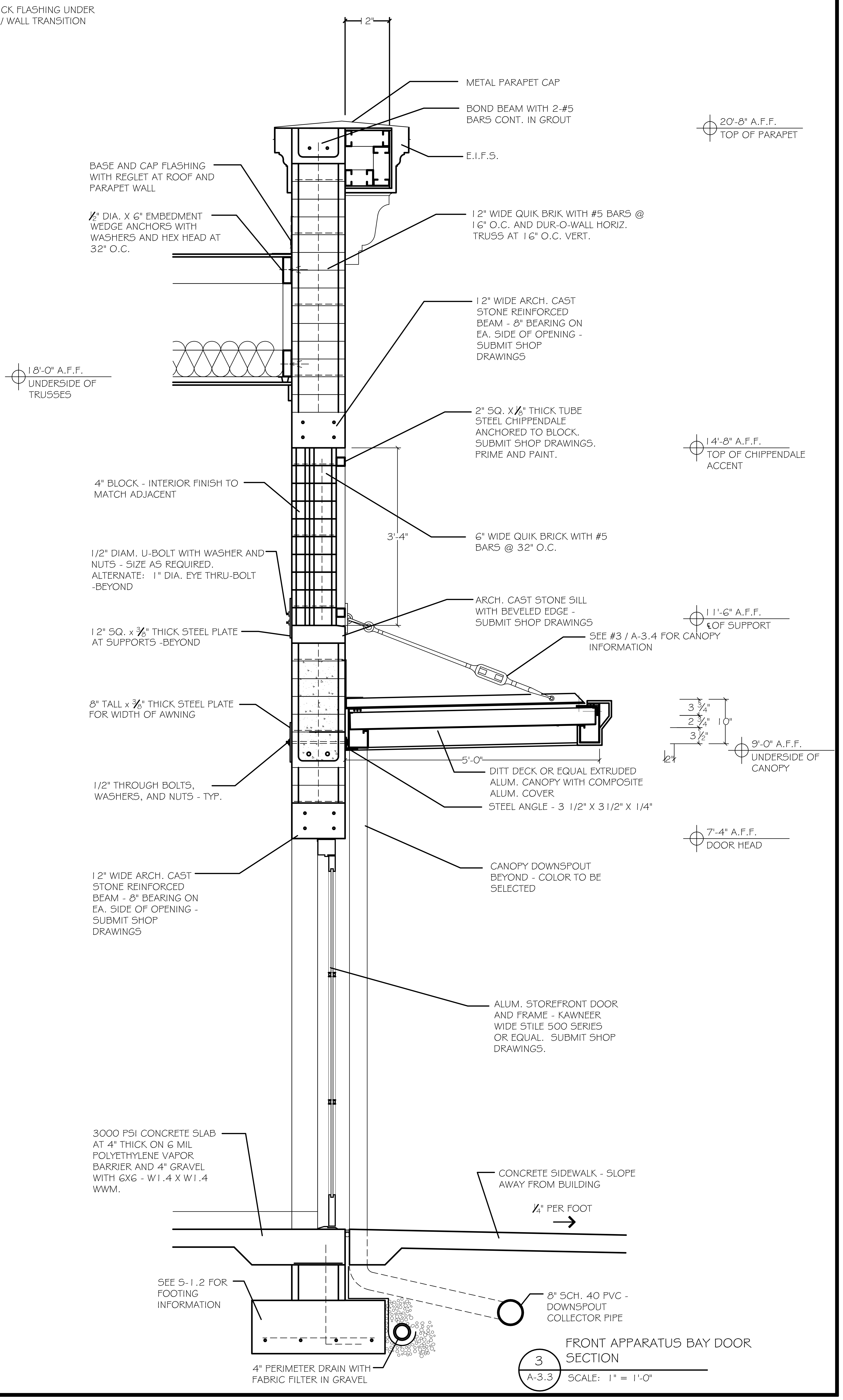
12"
METAL PARAPET CAP
BOND BEAM WITH 2-#5 BARS CONT. IN GROUT
E.I.F.S.
20'-8" A.F.F.
TOP OF PARAPET
BASE AND CAP FLASHING WITH REGLET AT ROOF AND PARAPET WALL
½" DIA. X 6" EMBEDMENT WEDGE ANCHORS WITH WASHERS AND HEX HEAD AT 32" O.C.
12" WIDE QUIK BRIK WITH #5 BARS @ 16" O.C. AND DUR-O-WALL HORIZ. TRUSS AT 16" O.C. VERT.
12" WIDE ARCH. CAST STONE REINFORCED BEAM - 8" BEARING ON EA. SIDE OF OPENING - SUBMIT SHOP DRAWINGS
18'-0" A.F.F.
UNDERSIDE OF TRUSSES
2" SQ. X ⅛" THICK TUBE STEEL CHIPPENDALE ANCHORED TO BLOCK. SUBMIT SHOP DRAWINGS. PRIME AND PAINT.
14'-8" A.F.F.
TOP OF CHIPPENDALE ACCENT
4" BLOCK - INTERIOR FINISH TO MATCH ADJACENT
3'-4"
6" WIDE QUIK BRICK WITH #5 BARS @ 32" O.C.
1/2" DIAM. U-BOLT WITH WASHER AND NUTS - SIZE AS REQUIRED. ALTERNATE: 1" DIA. EYE THRU-BOLT -BEYOND
ARCH. CAST STONE SILL WITH BEVELED EDGE - SUBMIT SHOP DRAWINGS
11'-6" A.F.F.
℄ OF SUPPORT
12" SQ. x ⅜" THICK STEEL PLATE AT SUPPORTS -BEYOND
SEE #3 / A-3.4 FOR CANOPY INFORMATION
8" TALL x ⅜" THICK STEEL PLATE FOR WIDTH OF AWNING
3 ¾"
2 ¾"
3 ½"
10"
2"
9'-0" A.F.F.
UNDERSIDE OF CANOPY
5'-0"
DITT DECK OR EQUAL EXTRUDED ALUM. CANOPY WITH COMPOSITE ALUM. COVER
1/2" THROUGH BOLTS, WASHERS, AND NUTS - TYP.
STEEL ANGLE - 3 1/2" X 3 1/2" X 1/4"
7'-4" A.F.F.
DOOR HEAD
12" WIDE ARCH. CAST STONE REINFORCED BEAM - 8" BEARING ON EA. SIDE OF OPENING - SUBMIT SHOP DRAWINGS
CANOPY DOWNSPOUT BEYOND - COLOR TO BE SELECTED
ALUM. STOREFRONT DOOR AND FRAME - KAWNEER WIDE STILE 500 SERIES OR EQUAL. SUBMIT SHOP DRAWINGS.
3000 PSI CONCRETE SLAB AT 4" THICK ON 6 MIL POLYETHYLENE VAPOR BARRIER AND 4" GRAVEL WITH 6X6 - W1.4 X W1.4 WWM.
CONCRETE SIDEWALK - SLOPE AWAY FROM BUILDING
¼" PER FOOT
SEE S-1.2 FOR FOOTING INFORMATION
8" SCH. 40 PVC - DOWNSPOUT COLLECTOR PIPE
4" PERIMETER DRAIN WITH FABRIC FILTER IN GRAVEL

3
A-3.3
FRONT APPARATUS BAY DOOR SECTION
SCALE: 1" = 1'-0"

ISSUED FOR CONSTRUCTION. DATE:

REVISIONS

Number	Date:	Remarks:	Number	Date:	Remarks:
X	00-00-00	N/A			

CONSULTANTS

CARTER WATKINS ASSOCIATES ARCHITECTS, INC.
POST OFFICE BOX 1004
137 EAST WASHINGTON STREET
MONROE, GEORGIA 30655
Fax: 770/267-1064
email@carterwatkins.com www.carterwatkins.com

SEAL
BENJAMIN MERCER CARTER

BARTOW COUNTY FIRE
STATION NO. 9
Battalion Headquarters

SHEET TITLE:
APAPRATUS BAY WALL SECTIONS

PRINTED:

NUMBER:
A-3.3

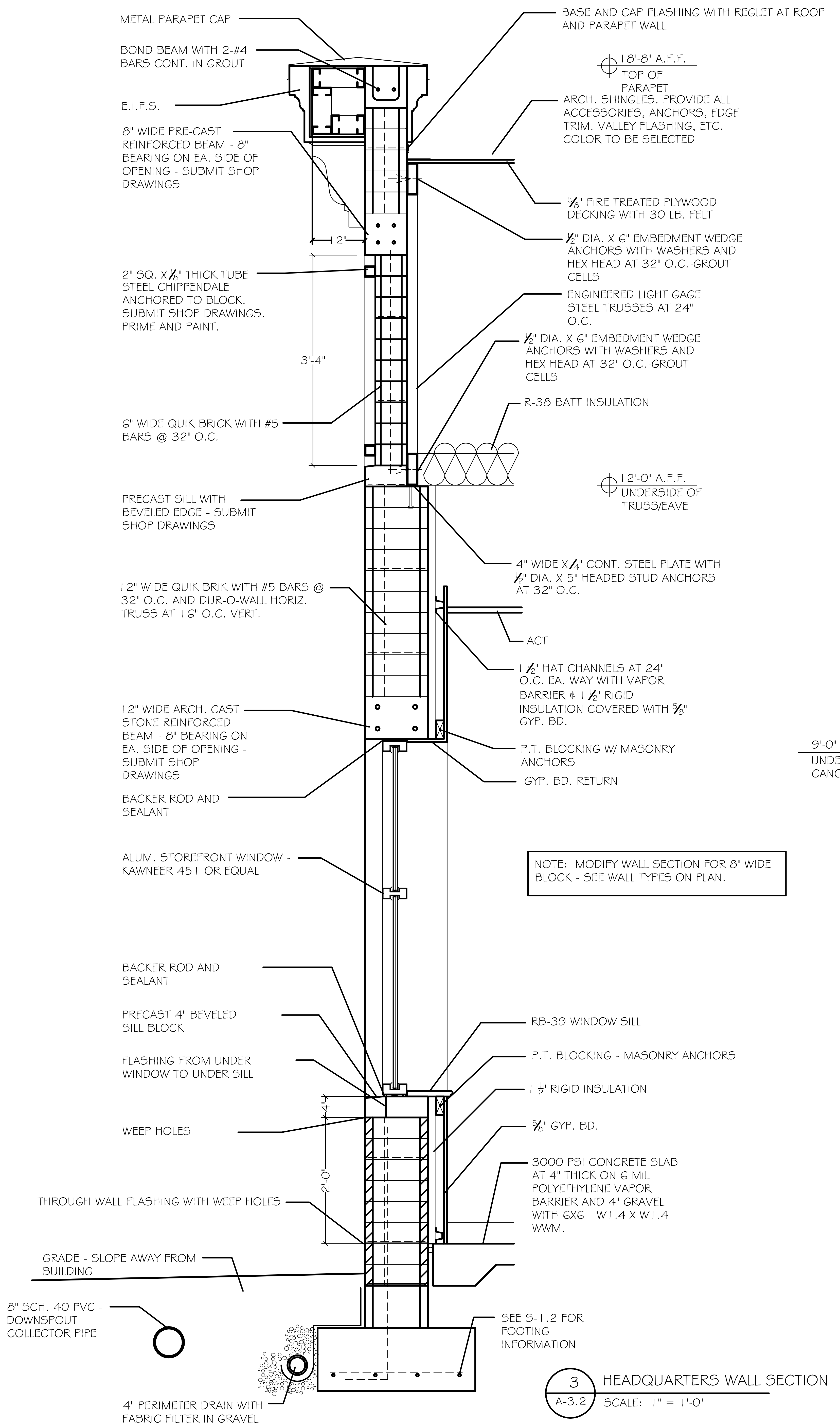
METAL PARAPET CAP
BOND BEAM WITH 2-#4 BARS CONT. IN GROUT
E.I.F.S.
8" WIDE PRE-CAST REINFORCED BEAM - 8" BEARING ON EA. SIDE OF OPENING - SUBMIT SHOP DRAWINGS
12"
2" SQ. X 1/8" THICK TUBE STEEL CHIPPENDALE ANCHORED TO BLOCK. SUBMIT SHOP DRAWINGS. PRIME AND PAINT.
3'-4"
6" WIDE QUIK BRICK WITH #5 BARS @ 32" O.C.
PRECAST SILL WITH BEVELED EDGE - SUBMIT SHOP DRAWINGS
12" WIDE QUIK BRIK WITH #5 BARS @ 32" O.C. AND DUR-O-WALL HORIZ. TRUSS AT 16" O.C. VERT.
12" WIDE ARCH. CAST STONE REINFORCED BEAM - 8" BEARING ON EA. SIDE OF OPENING - SUBMIT SHOP DRAWINGS
BACKER ROD AND SEALANT
ALUM. STOREFRONT WINDOW - KAWNEER 451 OR EQUAL
BACKER ROD AND SEALANT
PRECAST 4" BEVELED SILL BLOCK
FLASHING FROM UNDER WINDOW TO UNDER SILL
4"
WEEP HOLES
2'-0"
THROUGH WALL FLASHING WITH WEEP HOLES
GRADE - SLOPE AWAY FROM BUILDING
8" SCH. 40 PVC - DOWNSPOUT COLLECTOR PIPE
4" PERIMETER DRAIN WITH FABRIC FILTER IN GRAVEL
BASE AND CAP FLASHING WITH REGLET AT ROOF AND PARAPET WALL
18'-8" A.F.F. TOP OF PARAPET
ARCH. SHINGLES. PROVIDE ALL ACCESSORIES, ANCHORS, EDGE TRIM. VALLEY FLASHING, ETC. COLOR TO BE SELECTED
5/8" FIRE TREATED PLYWOOD DECKING WITH 30 LB. FELT
1/2" DIA. X 6" EMBEDMENT WEDGE ANCHORS WITH WASHERS AND HEX HEAD AT 32" O.C.-GROUT CELLS
ENGINEERED LIGHT GAGE STEEL TRUSSES AT 24" O.C.
1/2" DIA. X 6" EMBEDMENT WEDGE ANCHORS WITH WASHERS AND HEX HEAD AT 32" O.C.-GROUT CELLS
R-38 BATT INSULATION
12'-0" A.F.F. UNDERSIDE OF TRUSS/EAVE
4" WIDE X 1/4" CONT. STEEL PLATE WITH 1/2" DIA. X 5" HEADED STUD ANCHORS AT 32" O.C.
ACT
1 1/2" HAT CHANNELS AT 24" O.C. EA. WAY WITH VAPOR BARRIER & 1 1/2" RIGID INSULATION COVERED WITH 5/8" GYP. BD.
P.T. BLOCKING W/ MASONRY ANCHORS
GYP. BD. RETURN
NOTE: MODIFY WALL SECTION FOR 8" WIDE BLOCK - SEE WALL TYPES ON PLAN.
RB-39 WINDOW SILL
P.T. BLOCKING - MASONRY ANCHORS
1 1/2" RIGID INSULATION
5/8" GYP. BD.
3000 PSI CONCRETE SLAB AT 4" THICK ON 6 MIL POLYETHYLENE VAPOR BARRIER AND 4" GRAVEL WITH 6X6 - W1.4 X W1.4 WWM.
SEE S-1.2 FOR FOOTING INFORMATION

3 / A-3.2 HEADQUARTERS WALL SECTION

SCALE: 1" = 1'-0"

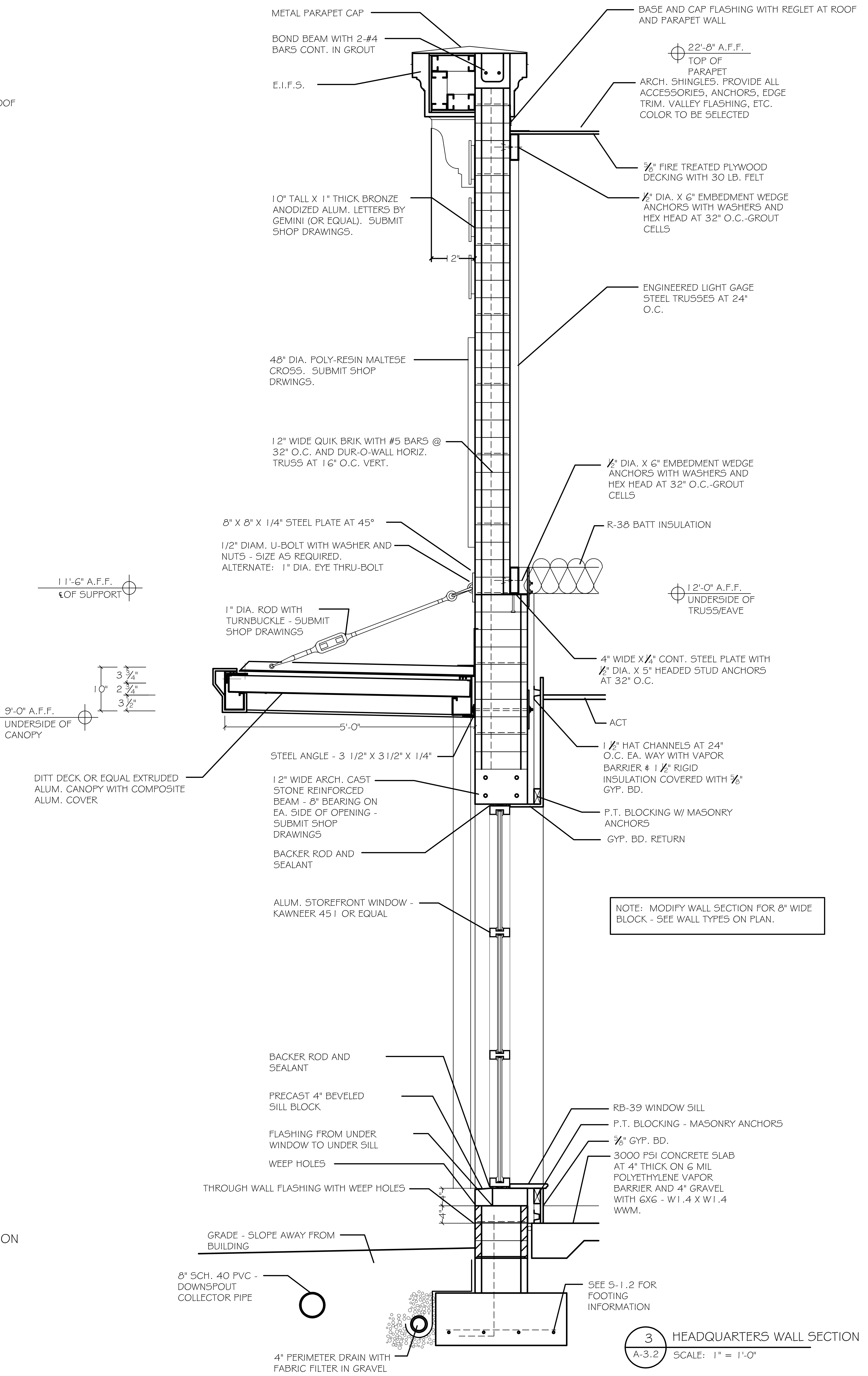
METAL PARAPET CAP
BOND BEAM WITH 2-#4 BARS CONT. IN GROUT
E.I.F.S.
10" TALL X 1" THICK BRONZE ANODIZED ALUM. LETTERS BY GEMINI (OR EQUAL). SUBMIT SHOP DRAWINGS.
12"
48" DIA. POLY-RESIN MALTESE CROSS. SUBMIT SHOP DRWINGS.
12" WIDE QUIK BRIK WITH #5 BARS @ 32" O.C. AND DUR-O-WALL HORIZ. TRUSS AT 16" O.C. VERT.
8" X 8" X 1/4" STEEL PLATE AT 45°
1/2" DIAM. U-BOLT WITH WASHER AND NUTS - SIZE AS REQUIRED. ALTERNATE: 1" DIA. EYE THRU-BOLT
11'-6" A.F.F. ℄ OF SUPPORT
1" DIA. ROD WITH TURNBUCKLE - SUBMIT SHOP DRAWINGS
3 3/4"
10"
2 3/4"
3 1/2"
9'-0" A.F.F. UNDERSIDE OF CANOPY
5'-0"
STEEL ANGLE - 3 1/2" X 3 1/2" X 1/4"
DITT DECK OR EQUAL EXTRUDED ALUM. CANOPY WITH COMPOSITE ALUM. COVER
12" WIDE ARCH. CAST STONE REINFORCED BEAM - 8" BEARING ON EA. SIDE OF OPENING - SUBMIT SHOP DRAWINGS
BACKER ROD AND SEALANT
ALUM. STOREFRONT WINDOW - KAWNEER 451 OR EQUAL
BACKER ROD AND SEALANT
PRECAST 4" BEVELED SILL BLOCK
FLASHING FROM UNDER WINDOW TO UNDER SILL
WEEP HOLES
THROUGH WALL FLASHING WITH WEEP HOLES
4"
4"
GRADE - SLOPE AWAY FROM BUILDING
8" SCH. 40 PVC - DOWNSPOUT COLLECTOR PIPE
4" PERIMETER DRAIN WITH FABRIC FILTER IN GRAVEL
BASE AND CAP FLASHING WITH REGLET AT ROOF AND PARAPET WALL
22'-8" A.F.F. TOP OF PARAPET
ARCH. SHINGLES. PROVIDE ALL ACCESSORIES, ANCHORS, EDGE TRIM. VALLEY FLASHING, ETC. COLOR TO BE SELECTED
5/8" FIRE TREATED PLYWOOD DECKING WITH 30 LB. FELT
1/2" DIA. X 6" EMBEDMENT WEDGE ANCHORS WITH WASHERS AND HEX HEAD AT 32" O.C.-GROUT CELLS
ENGINEERED LIGHT GAGE STEEL TRUSSES AT 24" O.C.
1/2" DIA. X 6" EMBEDMENT WEDGE ANCHORS WITH WASHERS AND HEX HEAD AT 32" O.C.-GROUT CELLS
R-38 BATT INSULATION
12'-0" A.F.F. UNDERSIDE OF TRUSS/EAVE
4" WIDE X 1/4" CONT. STEEL PLATE WITH 1/2" DIA. X 5" HEADED STUD ANCHORS AT 32" O.C.
ACT
1 1/2" HAT CHANNELS AT 24" O.C. EA. WAY WITH VAPOR BARRIER & 1 1/2" RIGID INSULATION COVERED WITH 5/8" GYP. BD.
P.T. BLOCKING W/ MASONRY ANCHORS
GYP. BD. RETURN
NOTE: MODIFY WALL SECTION FOR 8" WIDE BLOCK - SEE WALL TYPES ON PLAN.
RB-39 WINDOW SILL
P.T. BLOCKING - MASONRY ANCHORS
5/8" GYP. BD.
3000 PSI CONCRETE SLAB AT 4" THICK ON 6 MIL POLYETHYLENE VAPOR BARRIER AND 4" GRAVEL WITH 6X6 - W1.4 X W1.4 WWM.
SEE S-1.2 FOR FOOTING INFORMATION

3 / A-3.2 HEADQUARTERS WALL SECTION

SCALE: 1" = 1'-0"

ISSUED FOR CONSTRUCTION. DATE:

REVISIONS

Number	Date:	Remarks:	Number	Date:	Remarks:
X	00-00-00	N/A			

CONSULTANTS

CARTER WATKINS ASSOCIATES ARCHITECTS, INC.
POST OFFICE BOX 1004
137 EAST WASHINGTON STREET
MONROE, GEORGIA 30655
Fax: 770/267-1064
email@carterwatkins.com www.carterwatkins.com

SEAL

STATE OF GEORGIA
BENJAMIN MERCER CARTER
REGISTERED ARCHITECT

BARTOW COUNTY FIRE STATION NO. 9
Battalion Headquarters

SHEET TITLE:
WINDOW AND DOOR WALL SECTIONS

PRINTED:

NUMBER:
A-3.4

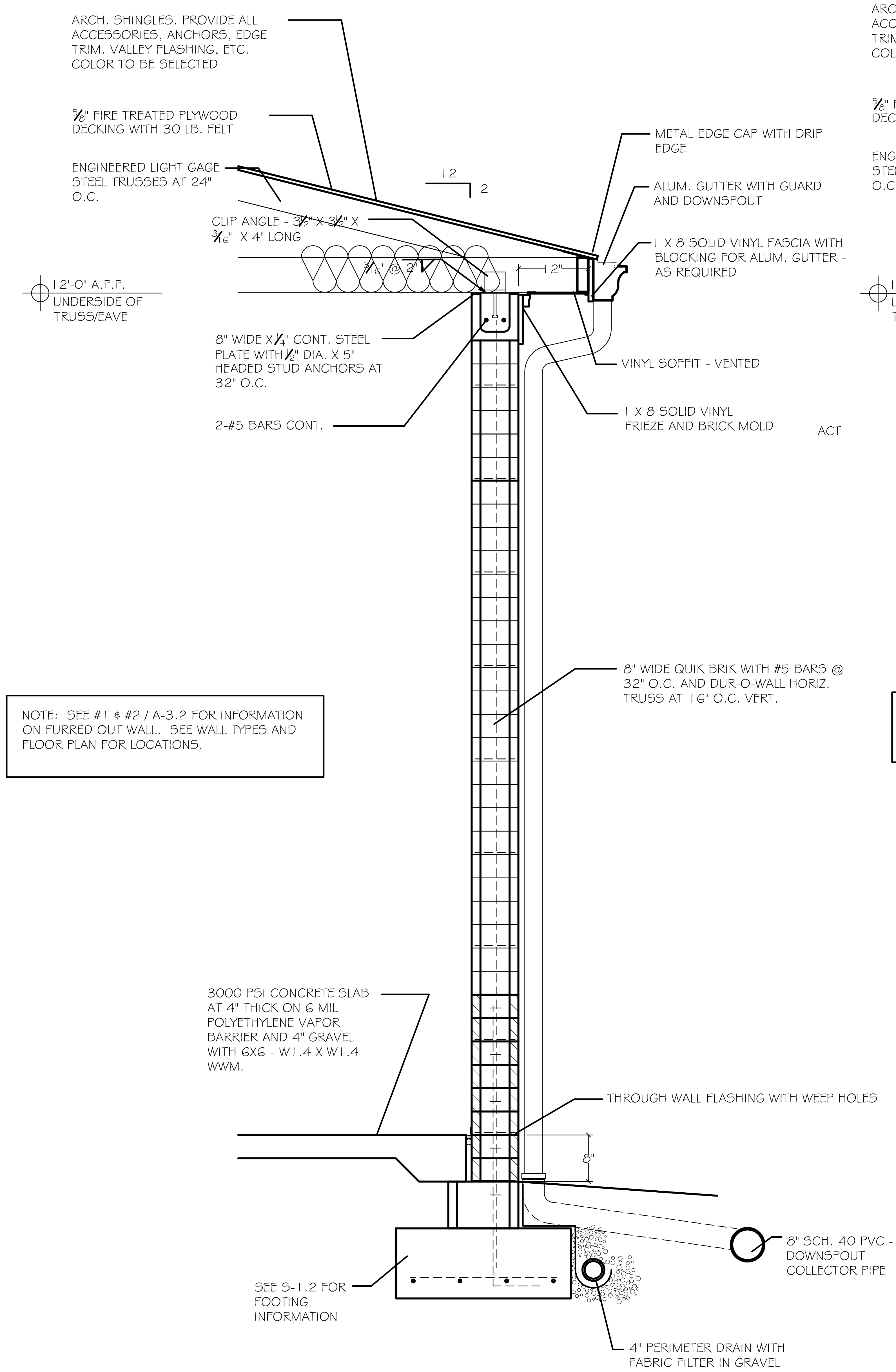
ARCH. SHINGLES. PROVIDE ALL ACCESSORIES, ANCHORS, EDGE TRIM. VALLEY FLASHING, ETC. COLOR TO BE SELECTED
5/8" FIRE TREATED PLYWOOD DECKING WITH 30 LB. FELT
ENGINEERED LIGHT GAGE STEEL TRUSSES AT 24" O.C.
12
2
CLIP ANGLE - 3 1/2" X 3 1/2" X 3/16" X 4" LONG
3/16" @ 2"
12'-0" A.F.F. UNDERSIDE OF TRUSS/EAVE
12"
METAL EDGE CAP WITH DRIP EDGE
ALUM. GUTTER WITH GUARD AND DOWNSPOUT
1 X 8 SOLID VINYL FASCIA WITH BLOCKING FOR ALUM. GUTTER - AS REQUIRED
8" WIDE X 1/4" CONT. STEEL PLATE WITH 1/2" DIA. X 5" HEADED STUD ANCHORS AT 32" O.C.
VINYL SOFFIT - VENTED
2-#5 BARS CONT.
1 X 8 SOLID VINYL FRIEZE AND BRICK MOLD
ACT
8" WIDE QUIK BRIK WITH #5 BARS @ 32" O.C. AND DUR-O-WALL HORIZ. TRUSS AT 16" O.C. VERT.
3000 PSI CONCRETE SLAB AT 4" THICK ON 6 MIL POLYETHYLENE VAPOR BARRIER AND 4" GRAVEL WITH 6X6 - W1.4 X W1.4 WWM.
THROUGH WALL FLASHING WITH WEEP HOLES
8"
8" SCH. 40 PVC - DOWNSPOUT COLLECTOR PIPE
SEE S-1.2 FOR FOOTING INFORMATION
4" PERIMETER DRAIN WITH FABRIC FILTER IN GRAVEL

NOTE: SEE #1 & #2 / A-3.2 FOR INFORMATION ON FURRED OUT WALL. SEE WALL TYPES AND FLOOR PLAN FOR LOCATIONS.

1 / A-3.5 WALL SECTION

SCALE: 1" = 1'-0"

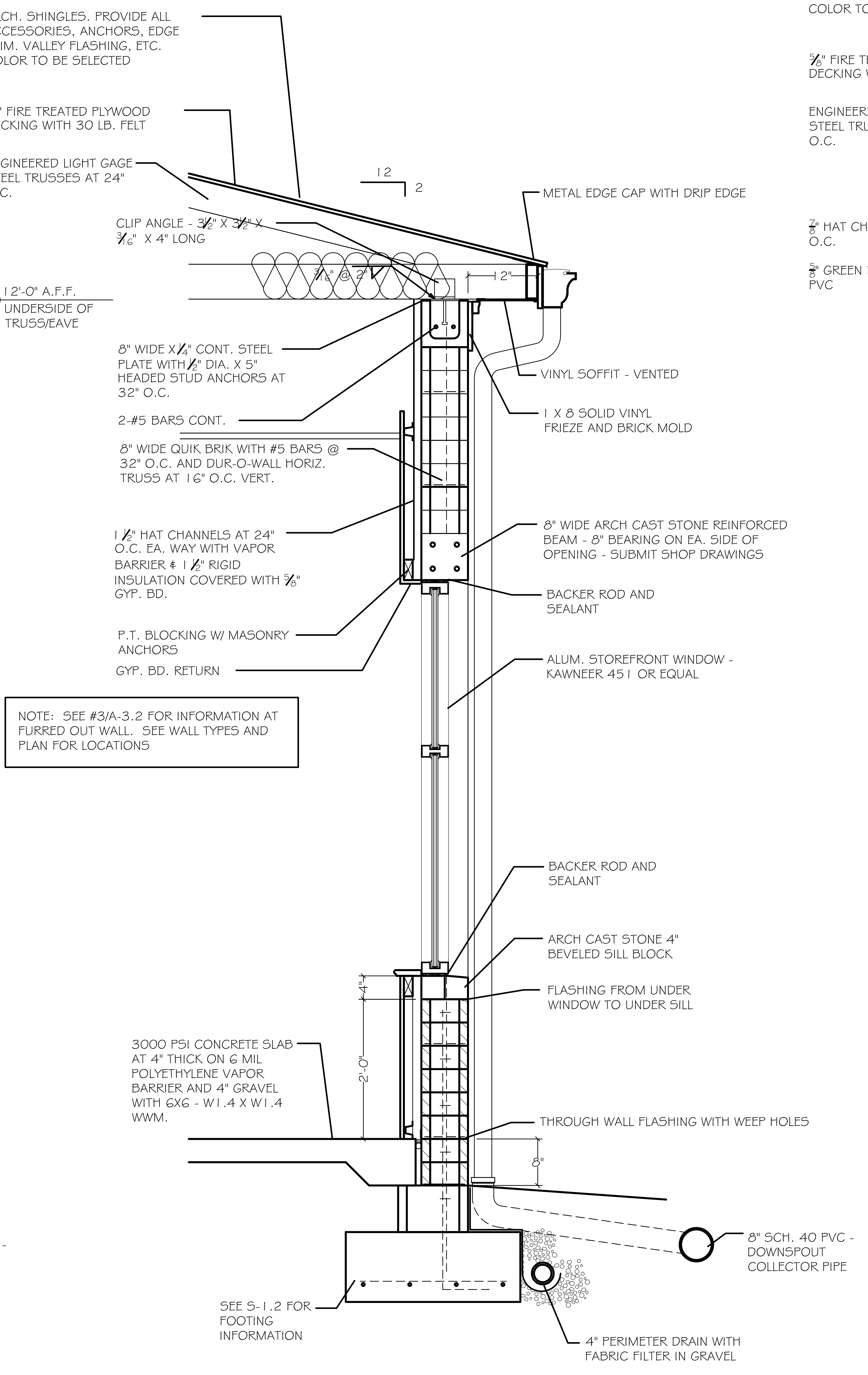
ARCH. SHINGLES. PROVIDE ALL ACCESSORIES, ANCHORS, EDGE TRIM. VALLEY FLASHING, ETC. COLOR TO BE SELECTED
5/8" FIRE TREATED PLYWOOD DECKING WITH 30 LB. FELT
ENGINEERED LIGHT GAGE STEEL TRUSSES AT 24" O.C.
12
2
CLIP ANGLE - 3 1/2" X 3 1/2" X 3/16" X 4" LONG
3/16" @ 2"
12'-0" A.F.F. UNDERSIDE OF TRUSS/EAVE
12"
METAL EDGE CAP WITH DRIP EDGE
8" WIDE X 1/4" CONT. STEEL PLATE WITH 1/2" DIA. X 5" HEADED STUD ANCHORS AT 32" O.C.
VINYL SOFFIT - VENTED
2-#5 BARS CONT.
1 X 8 SOLID VINYL FRIEZE AND BRICK MOLD
8" WIDE QUIK BRIK WITH #5 BARS @ 32" O.C. AND DUR-O-WALL HORIZ. TRUSS AT 16" O.C. VERT.
1 1/2" HAT CHANNELS AT 24" O.C. EA. WAY WITH VAPOR BARRIER & 1 1/2" RIGID INSULATION COVERED WITH 5/8" GYP. BD.
8" WIDE ARCH CAST STONE REINFORCED BEAM - 8" BEARING ON EA. SIDE OF OPENING - SUBMIT SHOP DRAWINGS
BACKER ROD AND SEALANT
P.T. BLOCKING W/ MASONRY ANCHORS
GYP. BD. RETURN
ALUM. STOREFRONT WINDOW - KAWNEER 451 OR EQUAL
BACKER ROD AND SEALANT
ARCH CAST STONE 4" BEVELED SILL BLOCK
4"
FLASHING FROM UNDER WINDOW TO UNDER SILL
2'-0"
3000 PSI CONCRETE SLAB AT 4" THICK ON 6 MIL POLYETHYLENE VAPOR BARRIER AND 4" GRAVEL WITH 6X6 - W1.4 X W1.4 WWM.
THROUGH WALL FLASHING WITH WEEP HOLES
8"
8" SCH. 40 PVC - DOWNSPOUT COLLECTOR PIPE
SEE S-1.2 FOR FOOTING INFORMATION
4" PERIMETER DRAIN WITH FABRIC FILTER IN GRAVEL

NOTE: SEE #3/A-3.2 FOR INFORMATION AT FURRED OUT WALL. SEE WALL TYPES AND PLAN FOR LOCATIONS

2 / A-3.5 WINDOW SECTION

SCALE: 1" = 1'-0"

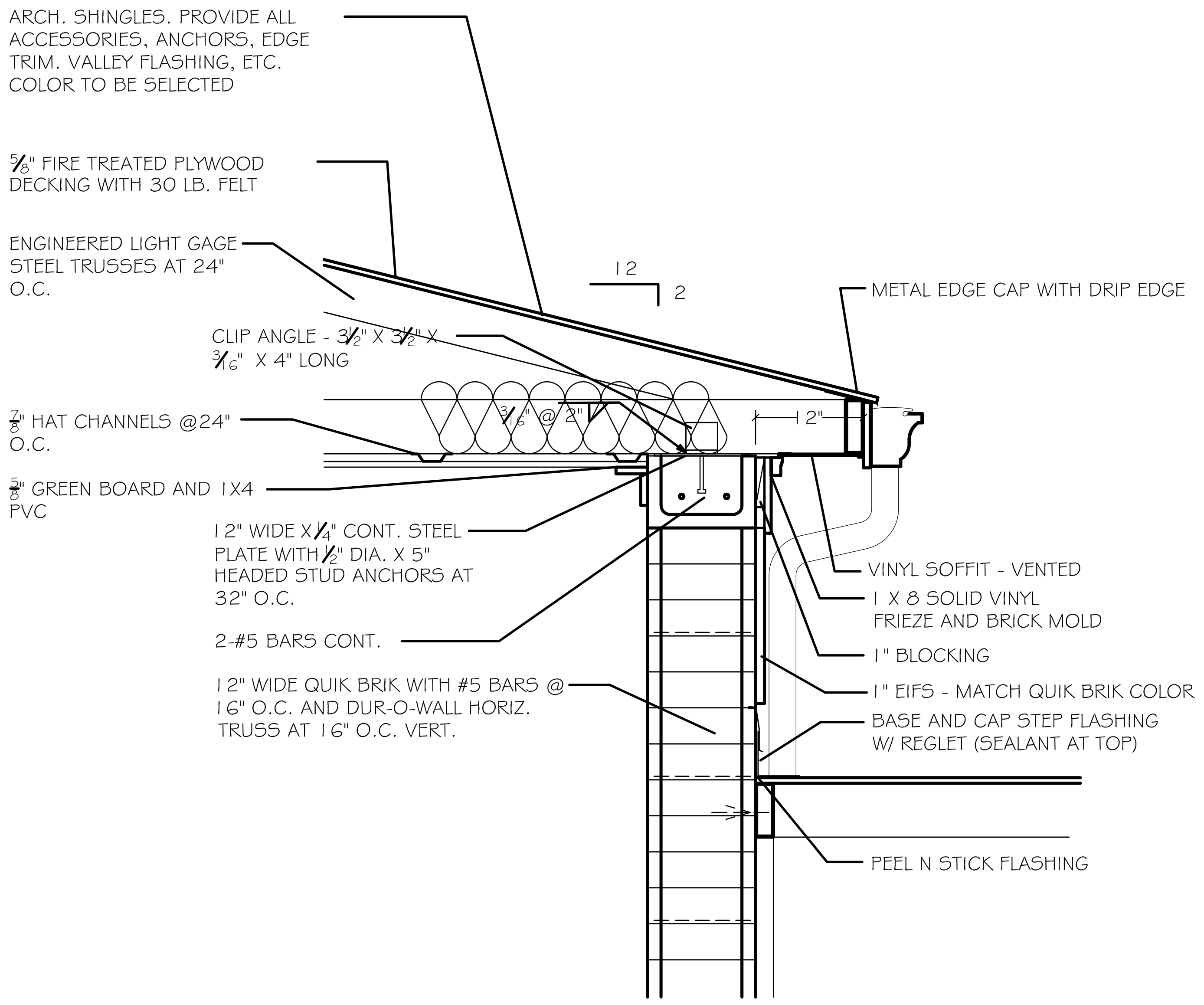
ARCH. SHINGLES. PROVIDE ALL ACCESSORIES, ANCHORS, EDGE TRIM. VALLEY FLASHING, ETC. COLOR TO BE SELECTED
5/8" FIRE TREATED PLYWOOD DECKING WITH 30 LB. FELT
ENGINEERED LIGHT GAGE STEEL TRUSSES AT 24" O.C.
12
2
METAL EDGE CAP WITH DRIP EDGE
CLIP ANGLE - 3 1/2" X 3 1/2" X 3/16" X 4" LONG
3/16" @ 2"
12"
7/8" HAT CHANNELS @24" O.C.
5/8" GREEN BOARD AND 1X4 PVC
12" WIDE X 1/4" CONT. STEEL PLATE WITH 1/2" DIA. X 5" HEADED STUD ANCHORS AT 32" O.C.
VINYL SOFFIT - VENTED
1 X 8 SOLID VINYL FRIEZE AND BRICK MOLD
2-#5 BARS CONT.
1" BLOCKING
12" WIDE QUIK BRIK WITH #5 BARS @ 16" O.C. AND DUR-O-WALL HORIZ. TRUSS AT 16" O.C. VERT.
1" EIFS - MATCH QUIK BRIK COLOR
BASE AND CAP STEP FLASHING W/ REGLET (SEALANT AT TOP)
PEEL N STICK FLASHING

3 / A-3.5 APPARATUS BAY EAVE

SCALE: 1" = 1'-0"

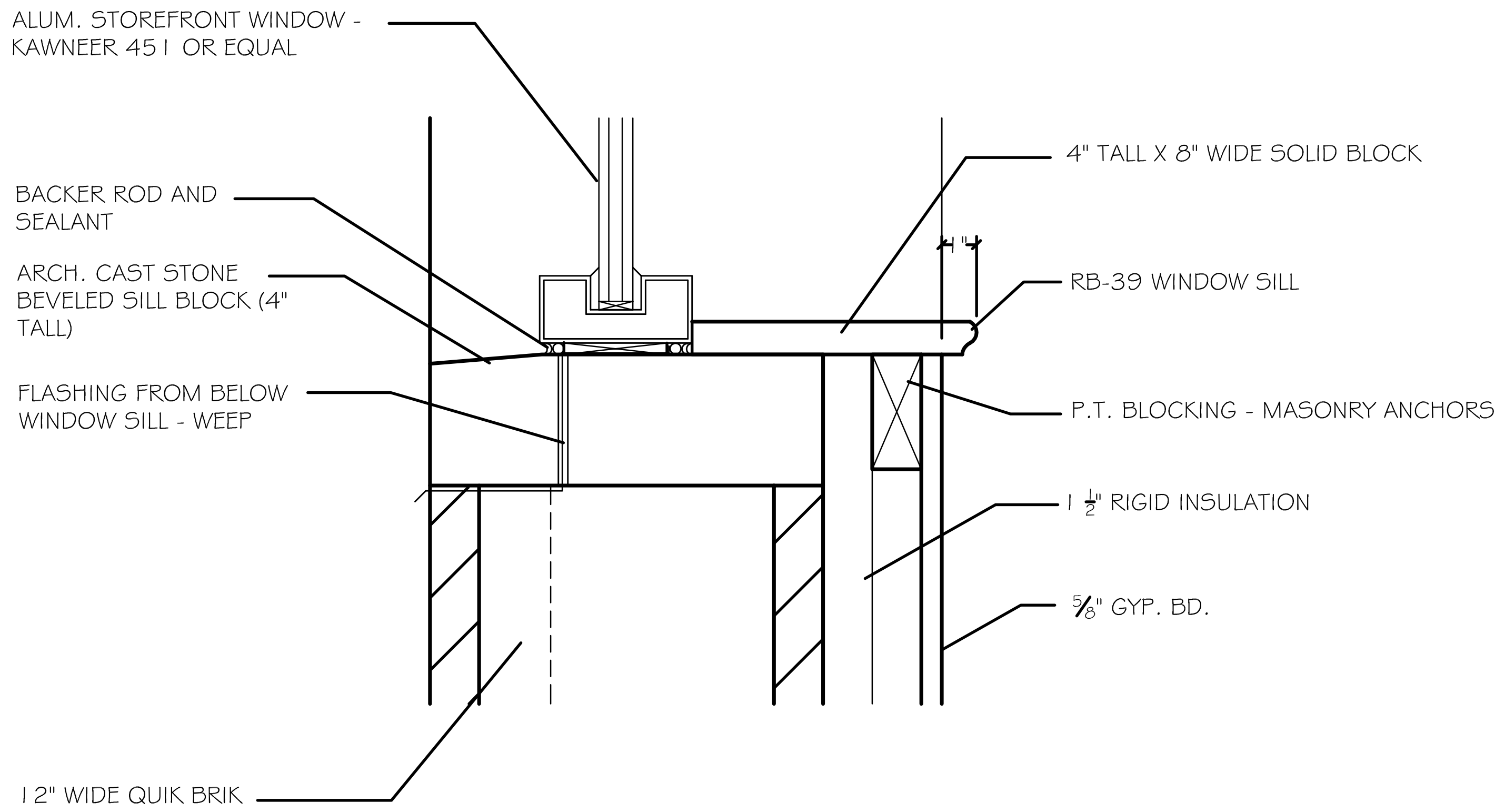
ALUM. STOREFRONT WINDOW - KAWNEER 451 OR EQUAL
4" TALL X 8" WIDE SOLID BLOCK
BACKER ROD AND SEALANT
1"
ARCH. CAST STONE BEVELED SILL BLOCK (4" TALL)
RB-39 WINDOW SILL
FLASHING FROM BELOW WINDOW SILL - WEEP
P.T. BLOCKING - MASONRY ANCHORS
1 1/2" RIGID INSULATION
5/8" GYP. BD.
12" WIDE QUIK BRIK

4 / A-3.5 WINDOW SILL (12" WALL SHOWN)

SCALE: 3" = 1'-0"

REVISIONS

Number	Date:	Remarks:	Number	Date:	Remarks:
X	00-00-00	N/A			

CONSULTANTS

CARTER WATKINS ASSOCIATES ARCHITECTS, INC.
POST OFFICE BOX 1004
137 EAST WASHINGTON STREET
MONROE, GEORGIA 30655
Fax: 770/267-1064
email@carterwatkins.com www.carterwatkins.com

SEAL

BENJAMIN MERCER CARTER

BARTOW COUNTY FIRE
STATION NO. 9
Battalion Headquarters

SHEET TITLE:
WALL SECTIONS

PRINTED:

NUMBER:
A-3.5

ISSUED FOR CONSTRUCTION. DATE: 10 / 21 / 09

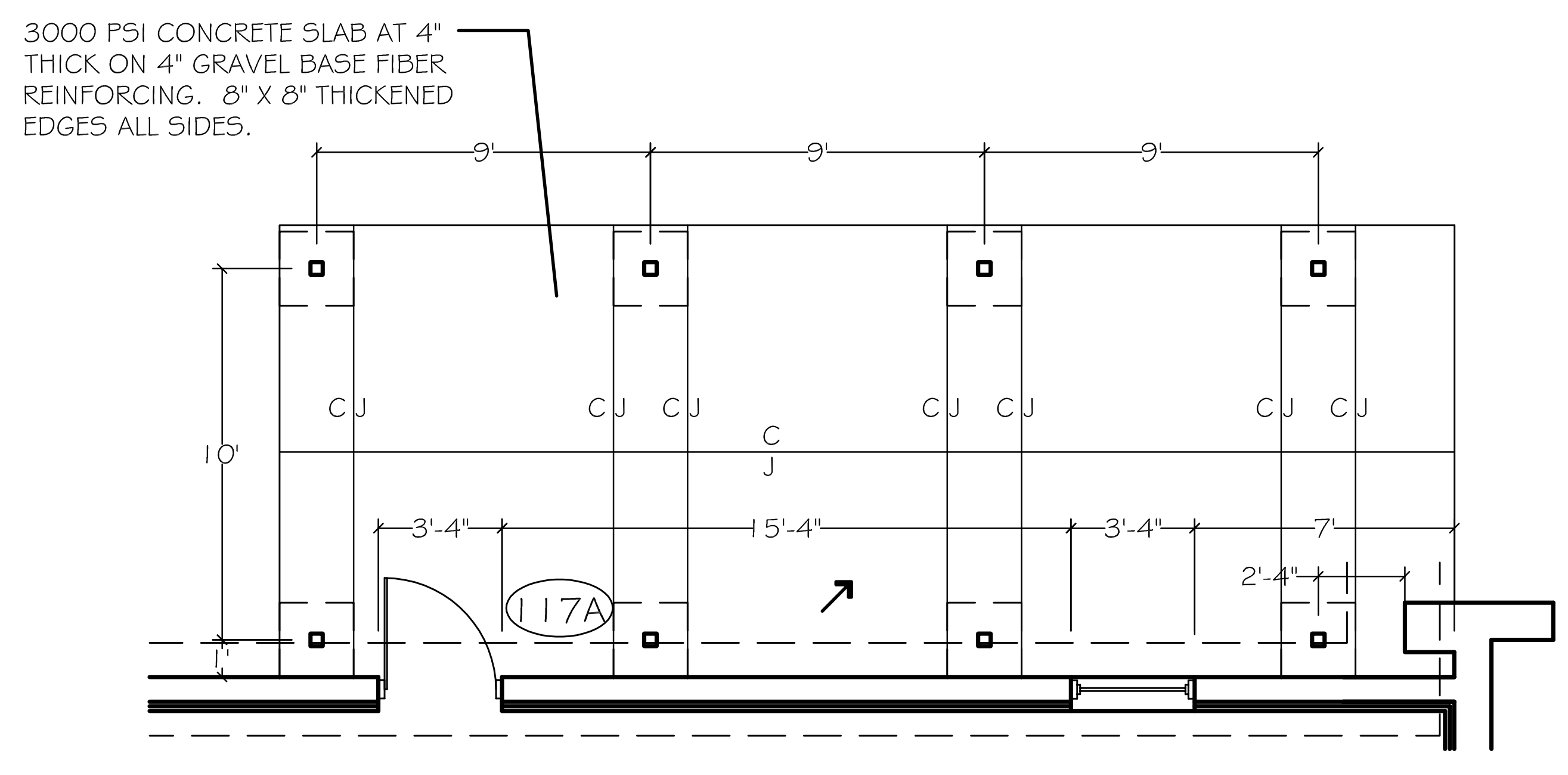
3000 PSI CONCRETE SLAB AT 4" THICK ON 4" GRAVEL BASE FIBER REINFORCING. 8" X 8" THICKENED EDGES ALL SIDES.
9'
9'
9'
10'
CJ
C J
3'-4"
15'-4"
3'-4"
7'
2'-4"
117A

1 A-3.6 COVER PORCH PLAN
SCALE: 1/4" = 1'-0"

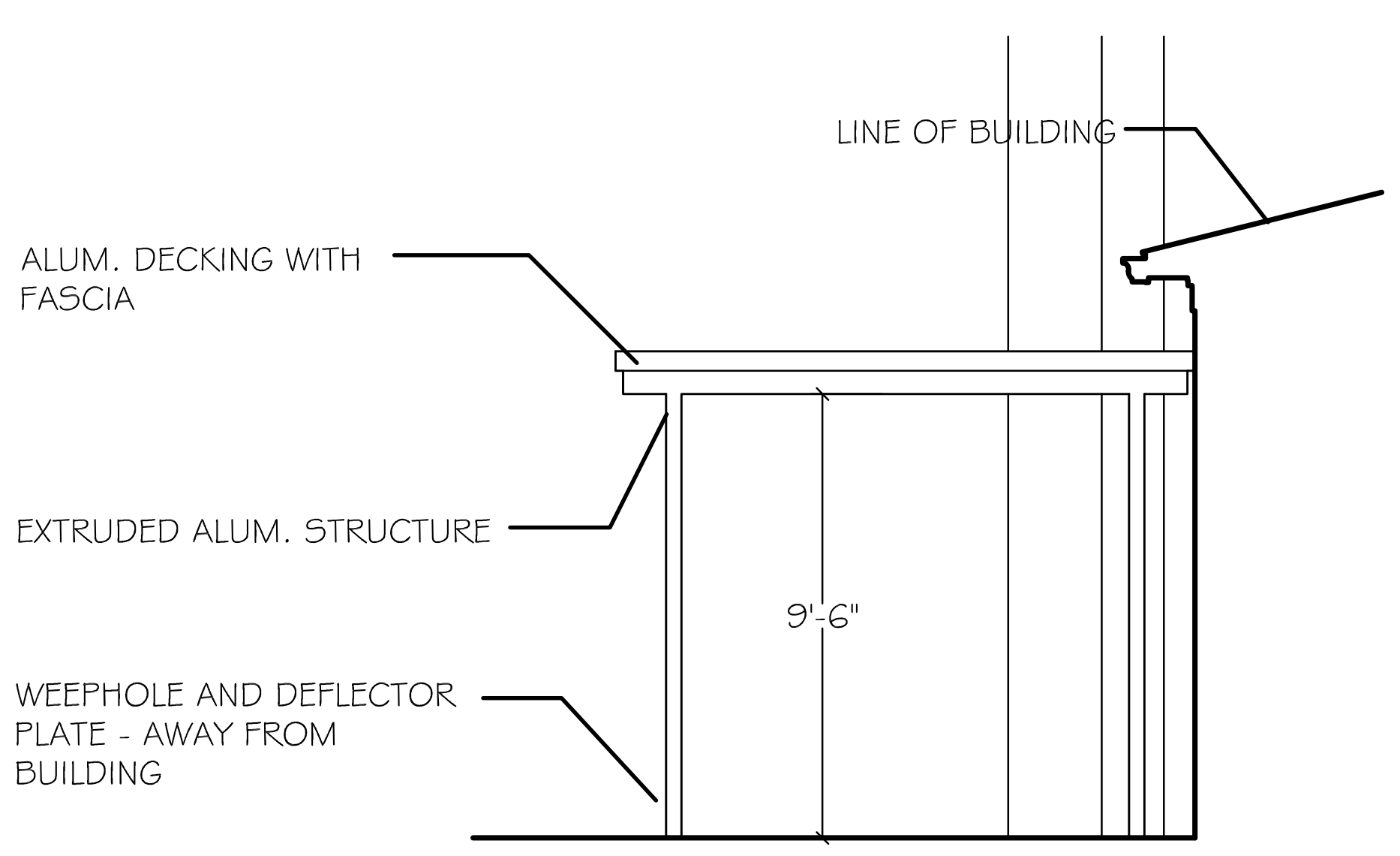
LINE OF BUILDING
ALUM. DECKING WITH FASCIA
EXTRUDED ALUM. STRUCTURE
WEEPHOLE AND DEFLECTOR PLATE - AWAY FROM BUILDING
9'-6"

2 A-3.6 SIDE ELEVATION
SCALE: 1/4" = 1'-0"

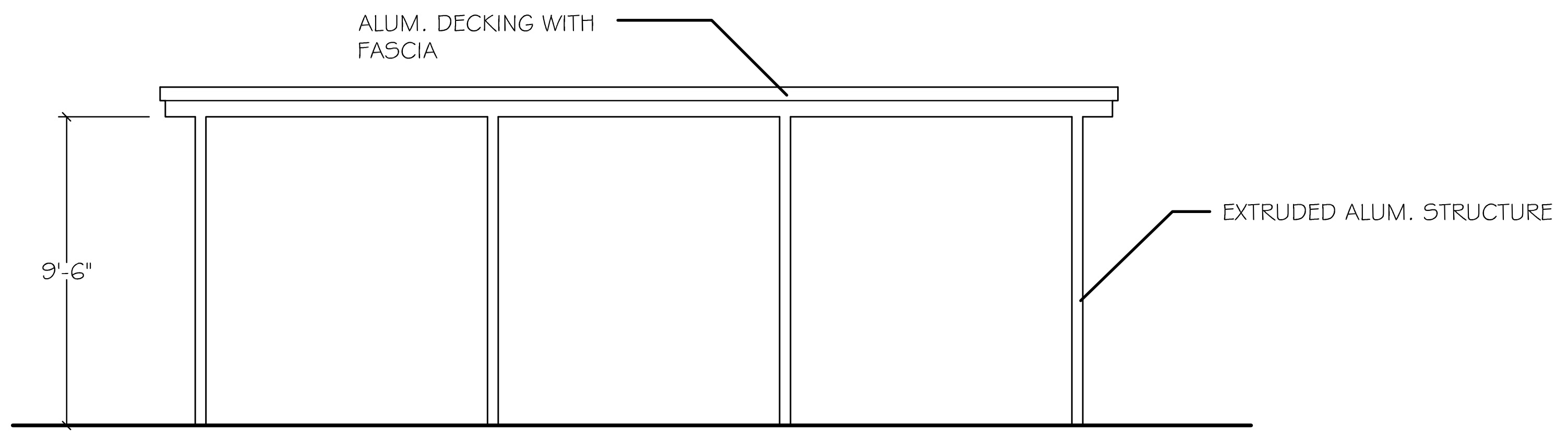
ALUM. DECKING WITH FASCIA
EXTRUDED ALUM. STRUCTURE
9'-6"

3 A-3.6 FRONT ELEVATION
SCALE: 1/4" = 1'-0"

NOTE: ALUMINUM CANOPY COVER FOR PORCH AREA

COVERED PORCH TO BE COVERED BY DITT DECK EXTRUDED ALUMINUM CANOPY OR EQUAL. SUBMIT SHOP DRAWINGS - INCLUDING LAYOUT, DRAIN COLUMNS, MECHANICAL JOINTS WITH COMPLETE DETAILS, CONNECTIONS, JOINTING, AND ACCESSORIES. INCLUDE FOOTING AND ANCHORING. PROVIDE SEALED STRUCTURAL CALCULATIONS FOR COVER BY A PROFESSIONAL ENGINEER I THE STATE OF GEORGIA.
ALLOW FOR TWO COLORS. ONE FOR STRUCTURE AND FASCIA AND ONE FOR EXTRUDED ALUMINUM DECKING. COLORS TO BE SELECTED FROM STANDARD COLOR CHART.

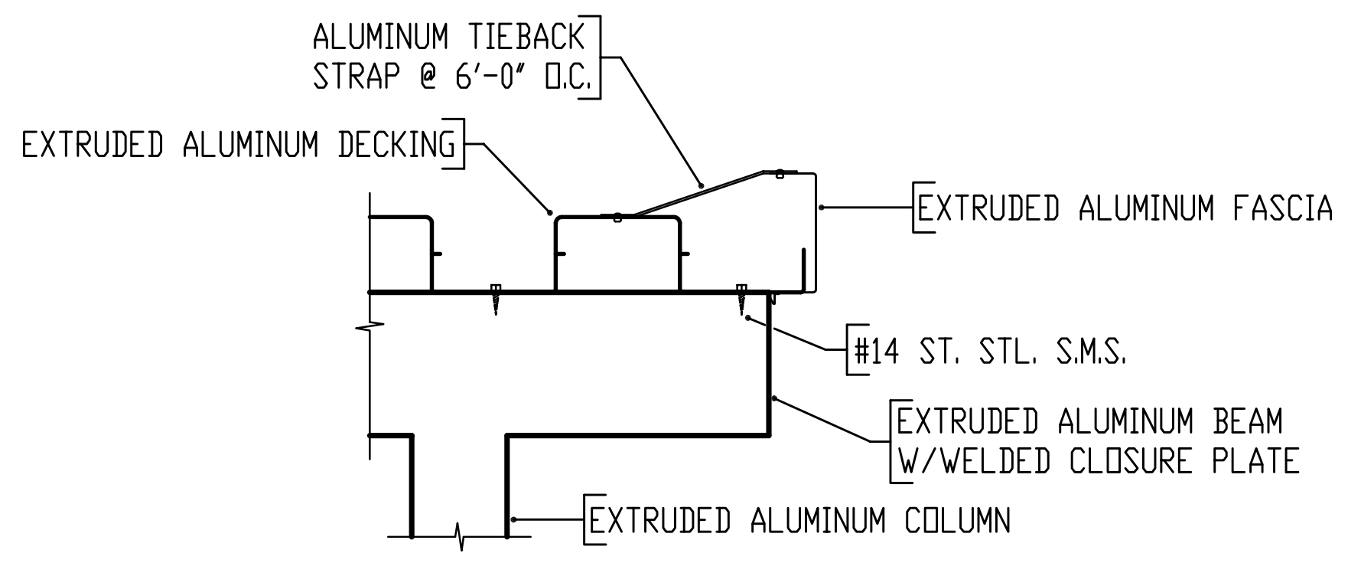
ALUMINUM TIEBACK STRAP @ 6'-0" O.C.
EXTRUDED ALUMINUM DECKING
EXTRUDED ALUMINUM FASCIA
#14 ST. STL. S.M.S.
EXTRUDED ALUMINUM BEAM W/WELDED CLOSURE PLATE
EXTRUDED ALUMINUM COLUMN

SECTION *F/1* *1 1/2"=1'-0"*

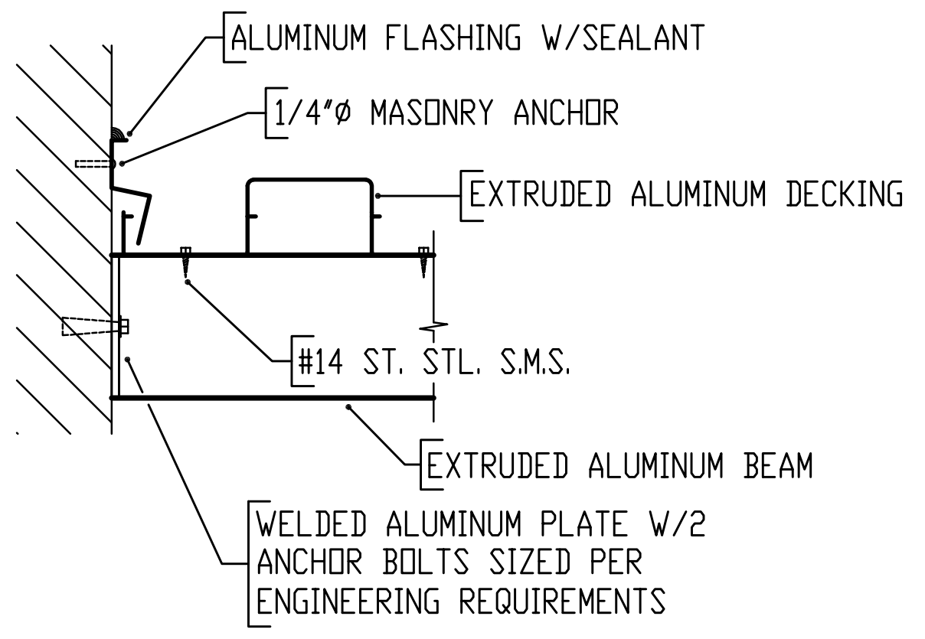
ALUMINUM FLASHING W/SEALANT
1/4"Ø MASONRY ANCHOR
EXTRUDED ALUMINUM DECKING
#14 ST. STL. S.M.S.
EXTRUDED ALUMINUM BEAM
WELDED ALUMINUM PLATE W/2 ANCHOR BOLTS SIZED PER ENGINEERING REQUIREMENTS

SECTION *G/1* *1 1/2"=1'-0"*

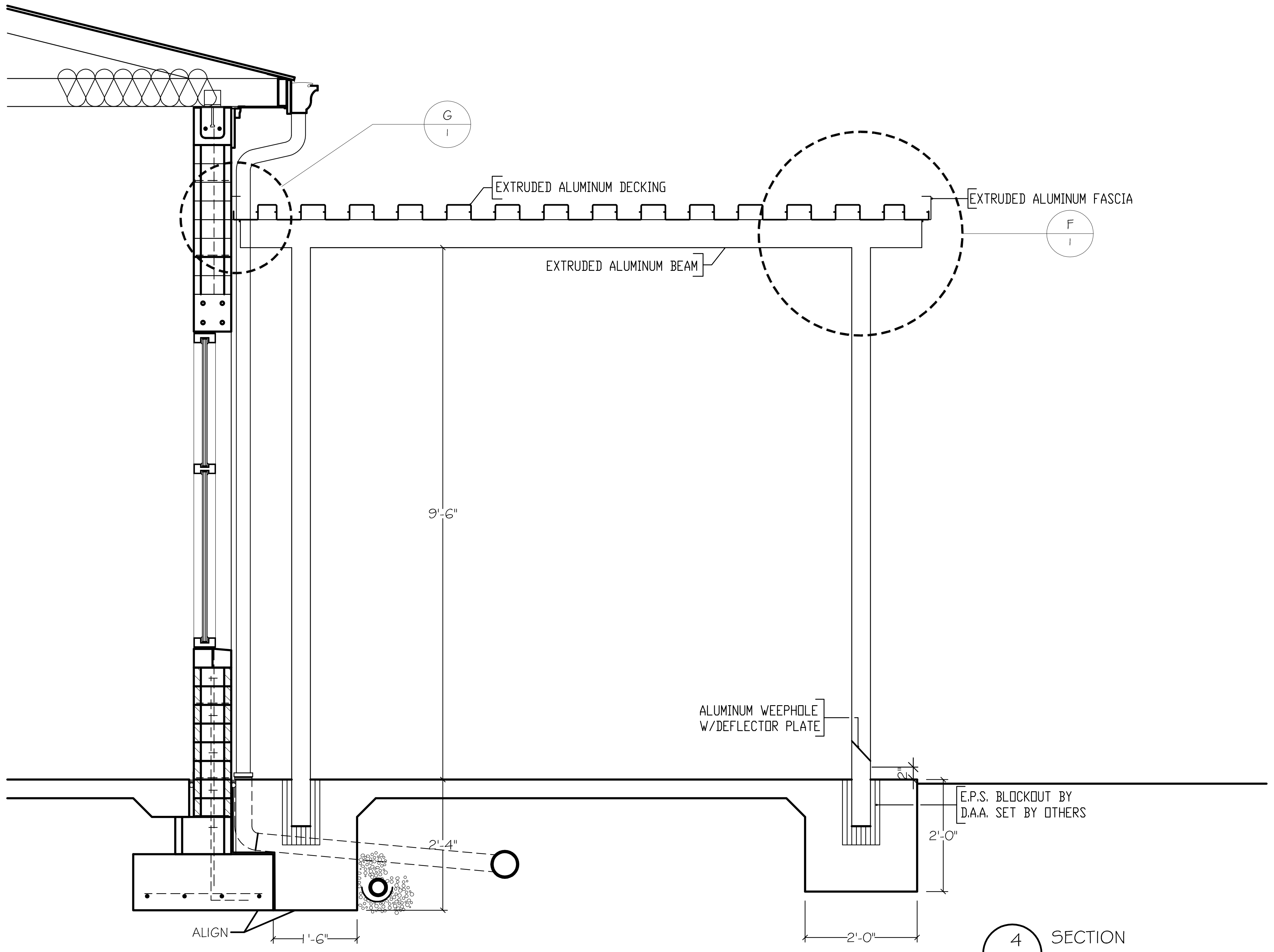
G
1
EXTRUDED ALUMINUM DECKING
EXTRUDED ALUMINUM FASCIA
F
1
EXTRUDED ALUMINUM BEAM
9'-6"
ALUMINUM WEEPHOLE W/DEFLECTOR PLATE
E.P.S. BLOCKOUT BY D.A.A. SET BY OTHERS
2'-0"
2'-4"
ALIGN
1'-6"
2'-0"

4 A-3.6 SECTION
SCALE: 3/4" = 1'-0"

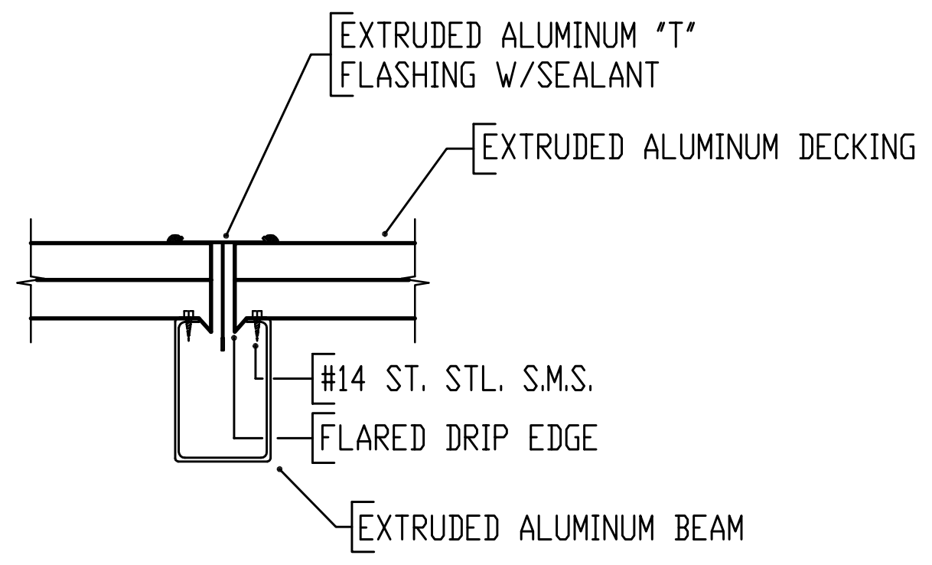
EXTRUDED ALUMINUM "T" FLASHING W/SEALANT
EXTRUDED ALUMINUM DECKING
#14 ST. STL. S.M.S.
FLARED DRIP EDGE
EXTRUDED ALUMINUM BEAM

TYPICAL SECTION THRU GUTTER BEAM
1 1/2"=1'-0"

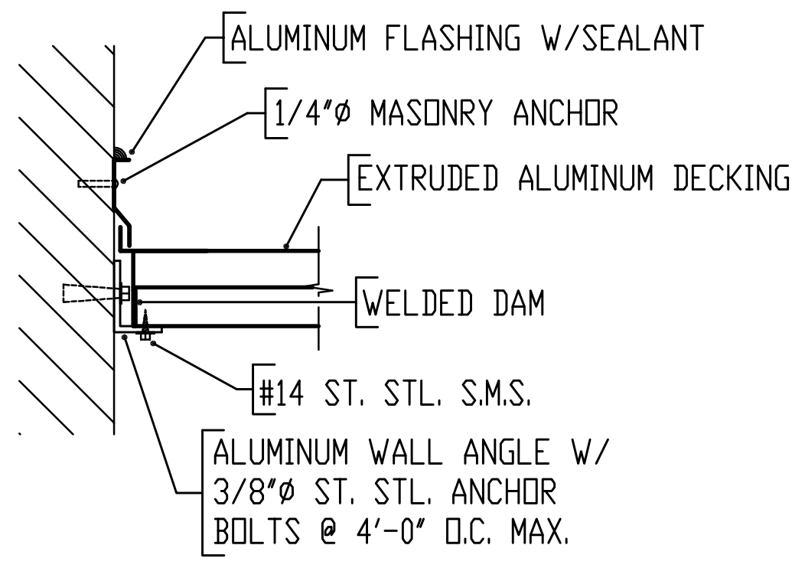
ALUMINUM FLASHING W/SEALANT
1/4"Ø MASONRY ANCHOR
EXTRUDED ALUMINUM DECKING
WELDED DAM
#14 ST. STL. S.M.S.
ALUMINUM WALL ANGLE W/ 3/8"Ø ST. STL. ANCHOR BOLTS @ 4'-0" O.C. MAX.

TYPICAL END WALL MOUNT DETAIL
1 1/2"=1'-0"

ISSUED FOR CONSTRUCTION. DATE: 10 / 21 / 09

REVISIONS

Number	Date:	Remarks:	Number	Date:	Remarks:
X	00-00-00	N/A			

CONSULTANTS

CARTER WATKINS ASSOCIATES
ARCHITECTS, INC.
POST OFFICE BOX 1004
137 EAST WASHINGTON STREET
MONROE, GEORGIA 30655
Fax: 770/267-1064
email@carterwatkins.com www.carterwatkins.com

SEAL
BENJAMIN MERCER CARTER

BARTOW COUNTY FIRE
STATION NO. 9
Battalion Headquarters

SHEET TITLE:
ALUMINUM CANOPY DETAILS -
PORCH DETAILS

PRINTED:

NUMBER:
A-3.6

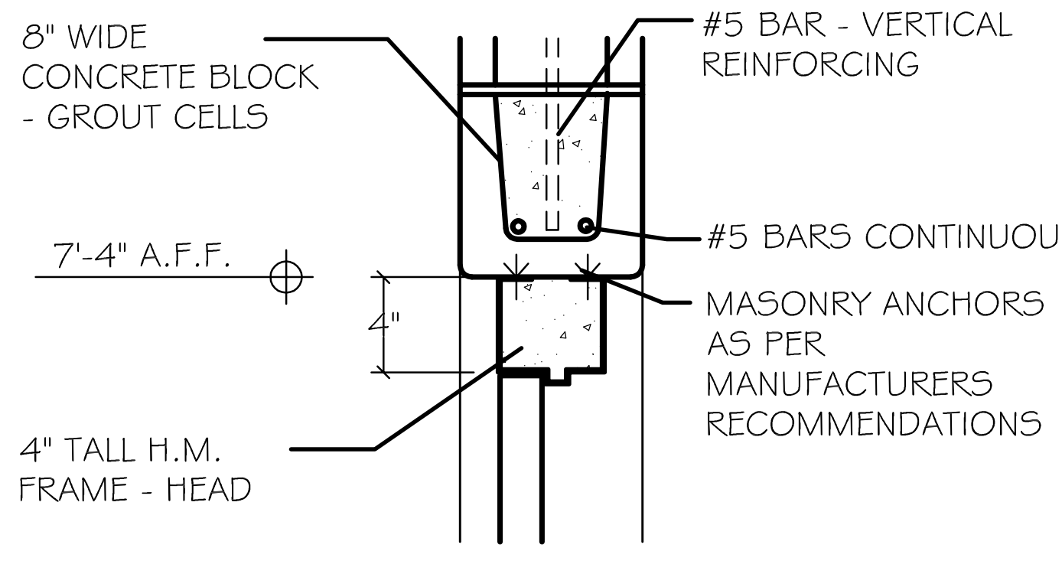
8" WIDE CONCRETE BLOCK - GROUT CELLS
#5 BAR - VERTICAL REINFORCING
#5 BARS CONTINUOUS
7'-4" A.F.F.
4"
MASONRY ANCHORS AS PER MANUFACTURERS RECOMMENDATIONS
4" TALL H.M. FRAME - HEAD

1 / A-3.7 DOOR HEAD - TYPICAL
SCALE: 1 1/2" = 1'-0"

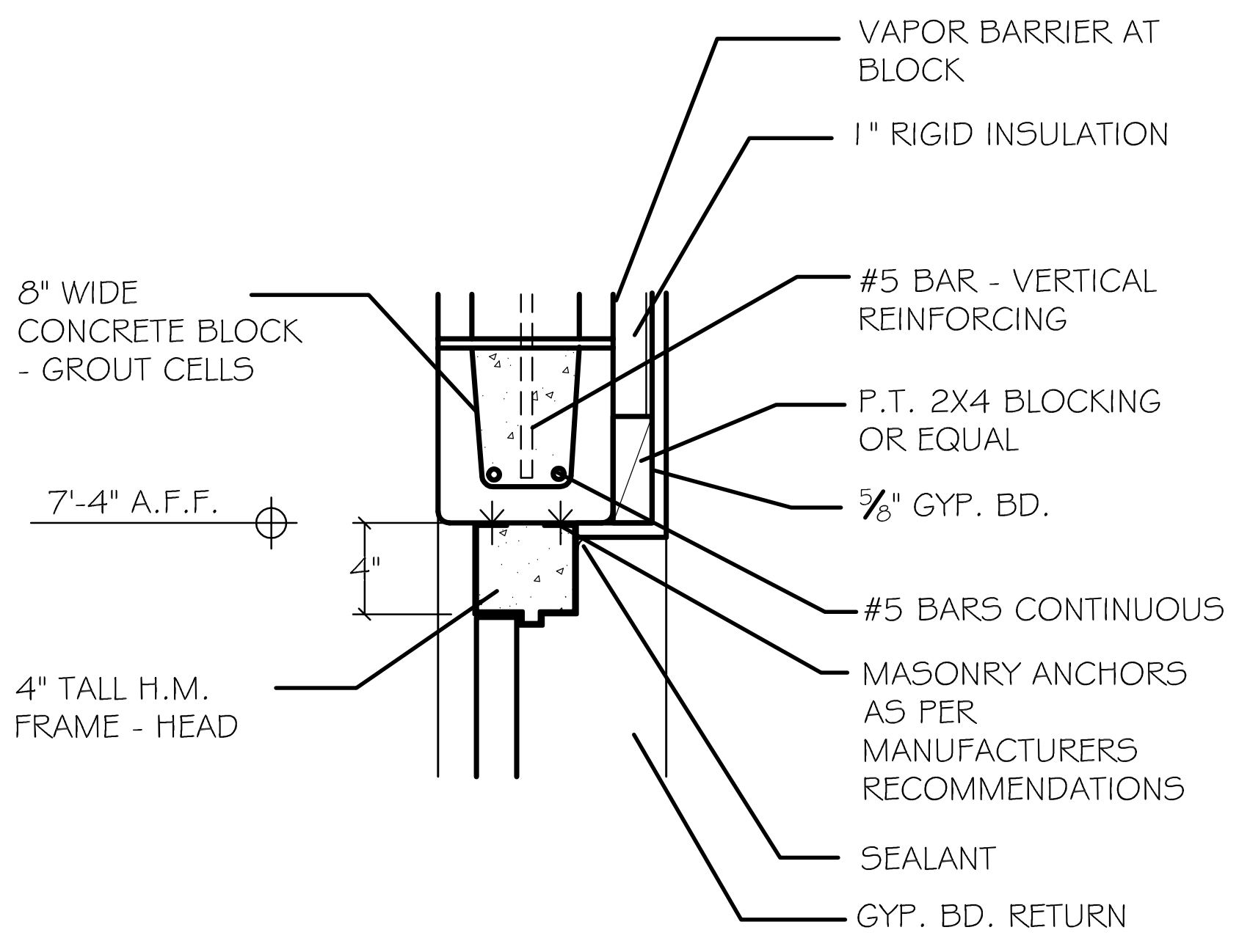
VAPOR BARRIER AT BLOCK
1" RIGID INSULATION
8" WIDE CONCRETE BLOCK - GROUT CELLS
#5 BAR - VERTICAL REINFORCING
P.T. 2X4 BLOCKING OR EQUAL
7'-4" A.F.F.
⅝" GYP. BD.
4"
#5 BARS CONTINUOUS
4" TALL H.M. FRAME - HEAD
MASONRY ANCHORS AS PER MANUFACTURERS RECOMMENDATIONS
SEALANT
GYP. BD. RETURN

3 / A-3.7 FURRED WALL DOOR HEAD - TYPICAL
SCALE: 1 1/2" = 1'-0"

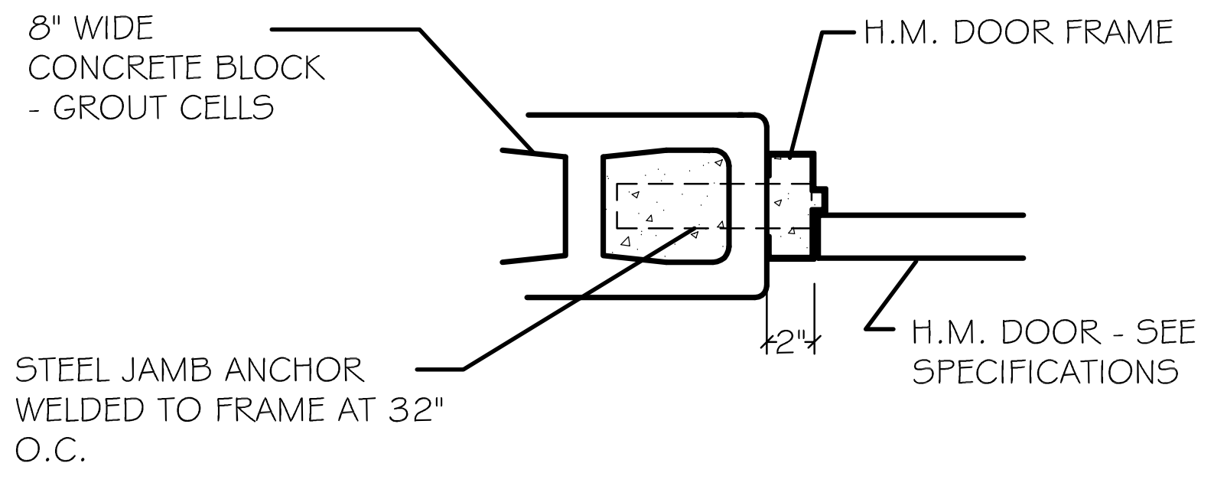
8" WIDE CONCRETE BLOCK - GROUT CELLS
H.M. DOOR FRAME
2"
STEEL JAMB ANCHOR WELDED TO FRAME AT 32" O.C.
H.M. DOOR - SEE SPECIFICATIONS

2 / A-3.7 DOOR JAMB - TYPICAL
SCALE: 1 1/2" = 1'-0"

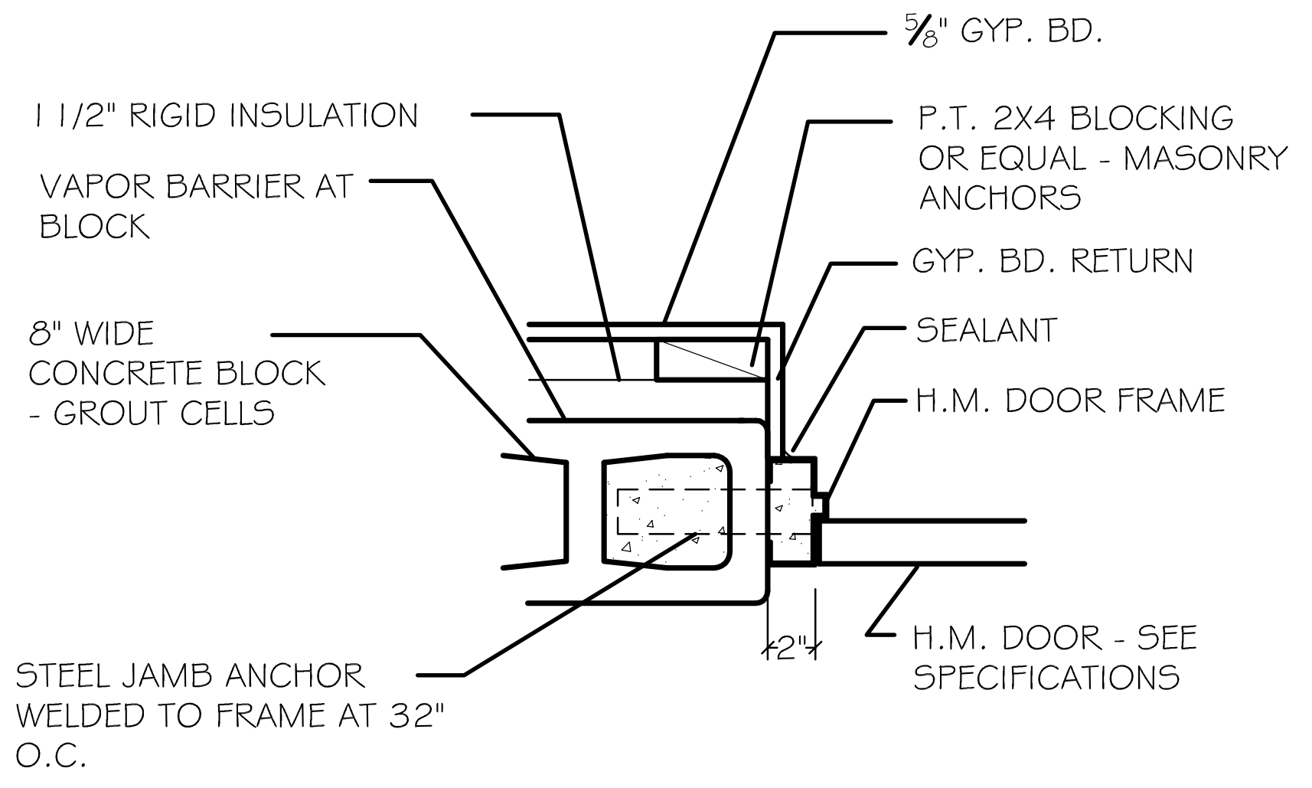
⅝" GYP. BD.
1 1/2" RIGID INSULATION
P.T. 2X4 BLOCKING OR EQUAL - MASONRY ANCHORS
VAPOR BARRIER AT BLOCK
GYP. BD. RETURN
SEALANT
8" WIDE CONCRETE BLOCK - GROUT CELLS
H.M. DOOR FRAME
2"
STEEL JAMB ANCHOR WELDED TO FRAME AT 32" O.C.
H.M. DOOR - SEE SPECIFICATIONS

4 / A-3.7 FURRED WALL DOOR JAMB - TYPICAL
SCALE: 1 1/2" = 1'-0"

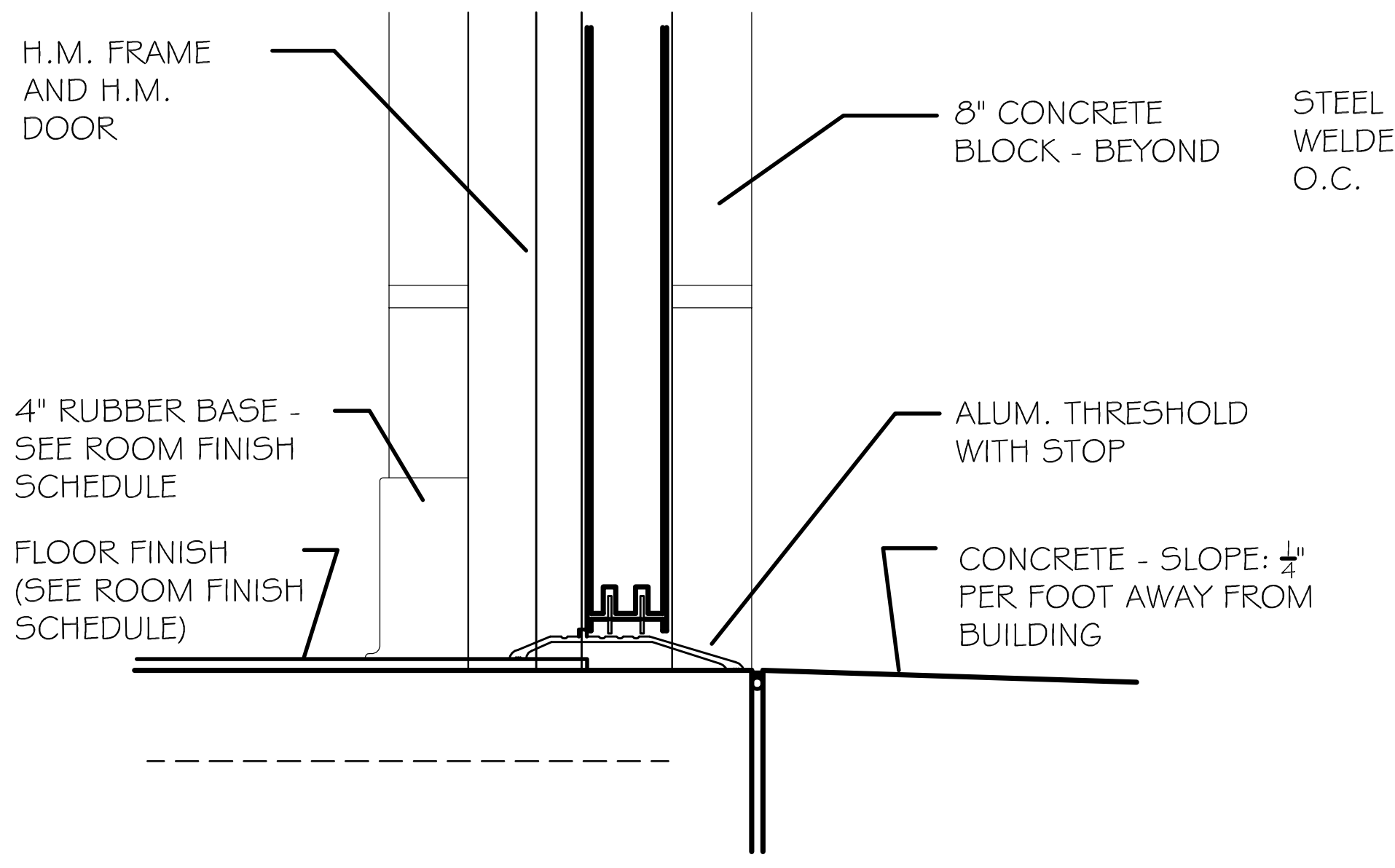
H.M. FRAME AND H.M. DOOR
8" CONCRETE BLOCK - BEYOND
4" RUBBER BASE - SEE ROOM FINISH SCHEDULE
ALUM. THRESHOLD WITH STOP
FLOOR FINISH (SEE ROOM FINISH SCHEDULE)
CONCRETE - SLOPE: ¼" PER FOOT AWAY FROM BUILDING

5 / A-3.7 (EXTERIOR) THRESHOLD
SCALE: 3" = 1'-0"

NOTE:

1. SEE ROOM FINISH SCHEDULE FOR SURROUNDING WALL FINISHES.

2. MODIFY DOOR FRAME FOR 6" METAL STUDS VS. 3-5/8" METAL STUDS.

3. SUBMIT SHOP DRAWINGS FOR ALL HOLLOW METAL DOOR FRAMES.

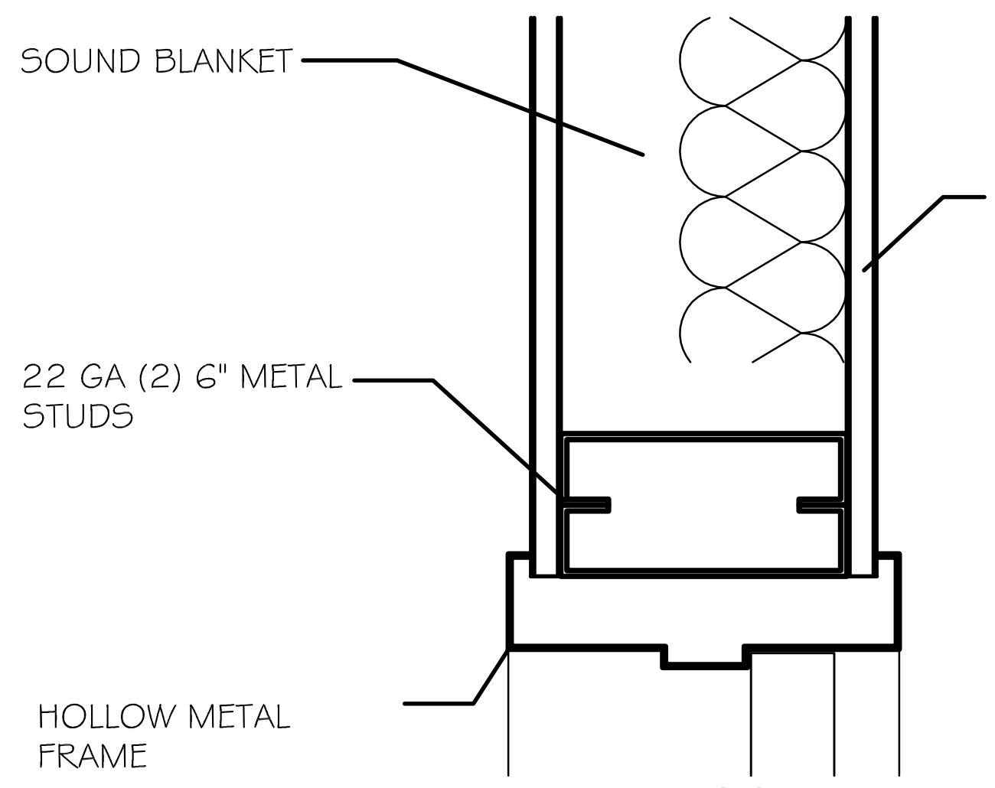
SOUND BLANKET
5/8" GYP. BOARD
22 GA (2) 6" METAL STUDS
HOLLOW METAL FRAME

6 / A-3.7 INT. DOOR - HEADER - TYPICAL
SCALE: 3" = 1'-0"

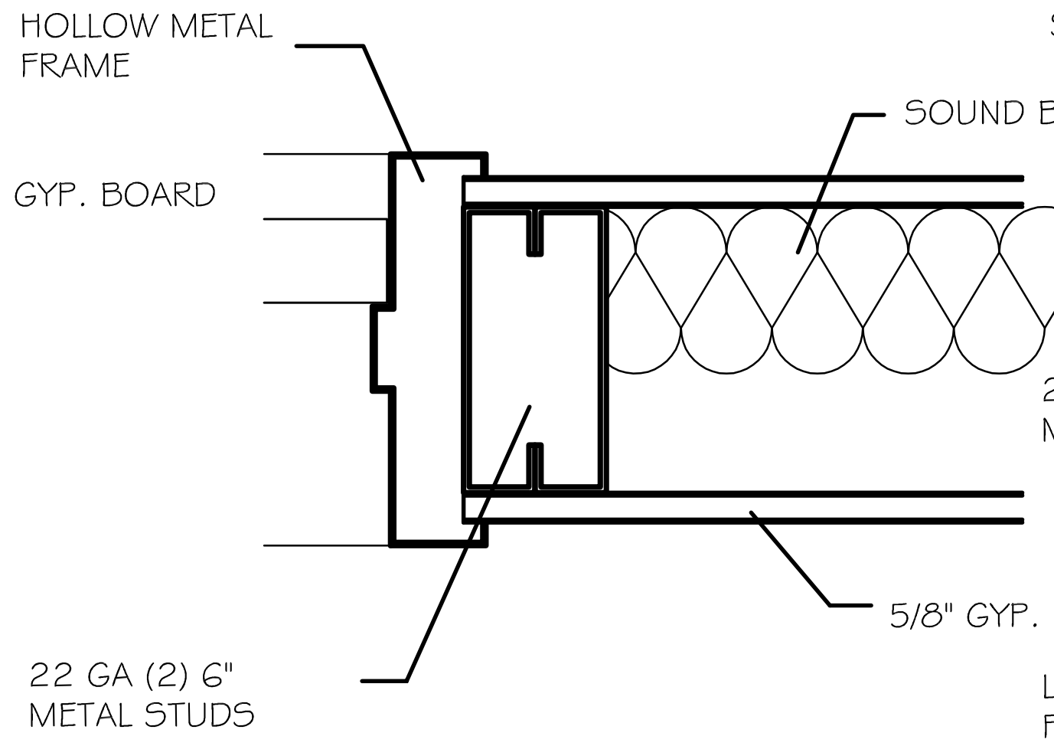
HOLLOW METAL FRAME
SOUND BLANKET
22 GA (2) 3 5/8" METAL STUDS
5/8" GYP. BOARD
22 GA (2) 6" METAL STUDS

7 / A-3.7 INT. DOOR - JAMB -TYPICAL
SCALE: 3" = 1'-0"

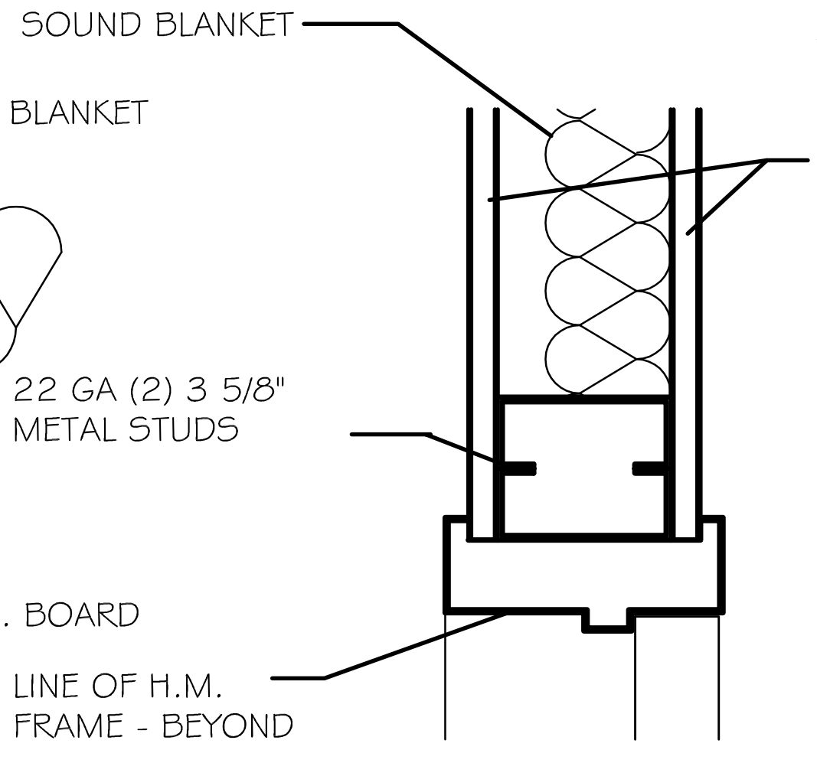
SOUND BLANKET
5/8" GYP. BOARD
LINE OF H.M. FRAME - BEYOND

8 / A-3.7 INT. DOOR - HEADER - TYPICAL
SCALE: 3" = 1'-0"

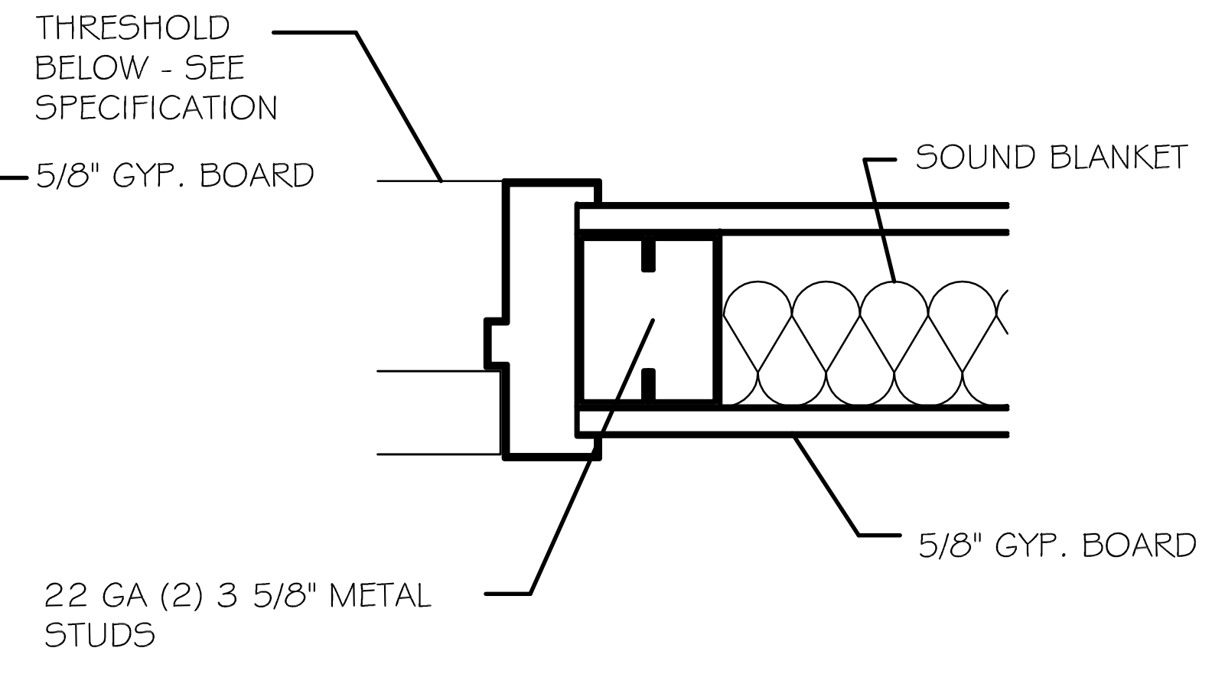
THRESHOLD BELOW - SEE SPECIFICATION
SOUND BLANKET
22 GA (2) 3 5/8" METAL STUDS
5/8" GYP. BOARD

9 / A-3.7 INT. DOOR - JAMB -TYPICAL
SCALE: 3" = 1'-0"

ISSUED FOR CONSTRUCTION. DATE: 10 / 21 / 09

REVISIONS

Number	Date:	Remarks:	Number	Date:	Remarks:
X	00-00-00	N/A			

CONSULTANTS

CARTER WATKINS ASSOCIATES
ARCHITECTS, INC.
POST OFFICE BOX 1004
137 EAST WASHINGTON STREET
MONROE, GEORGIA 30655
Fax: 770/267-1064
email@carterwatkins.com www.carterwatkins.com

SEAL
BENJAMIN MERCER CARTER

BARTOW COUNTY FIRE
STATION NO. 9
Battalion Headquarters

SHEET TITLE:
INTERIOR DOOR SECTIONS AND SITE SIGN

PRINTED:

NUMBER:
A-3.7

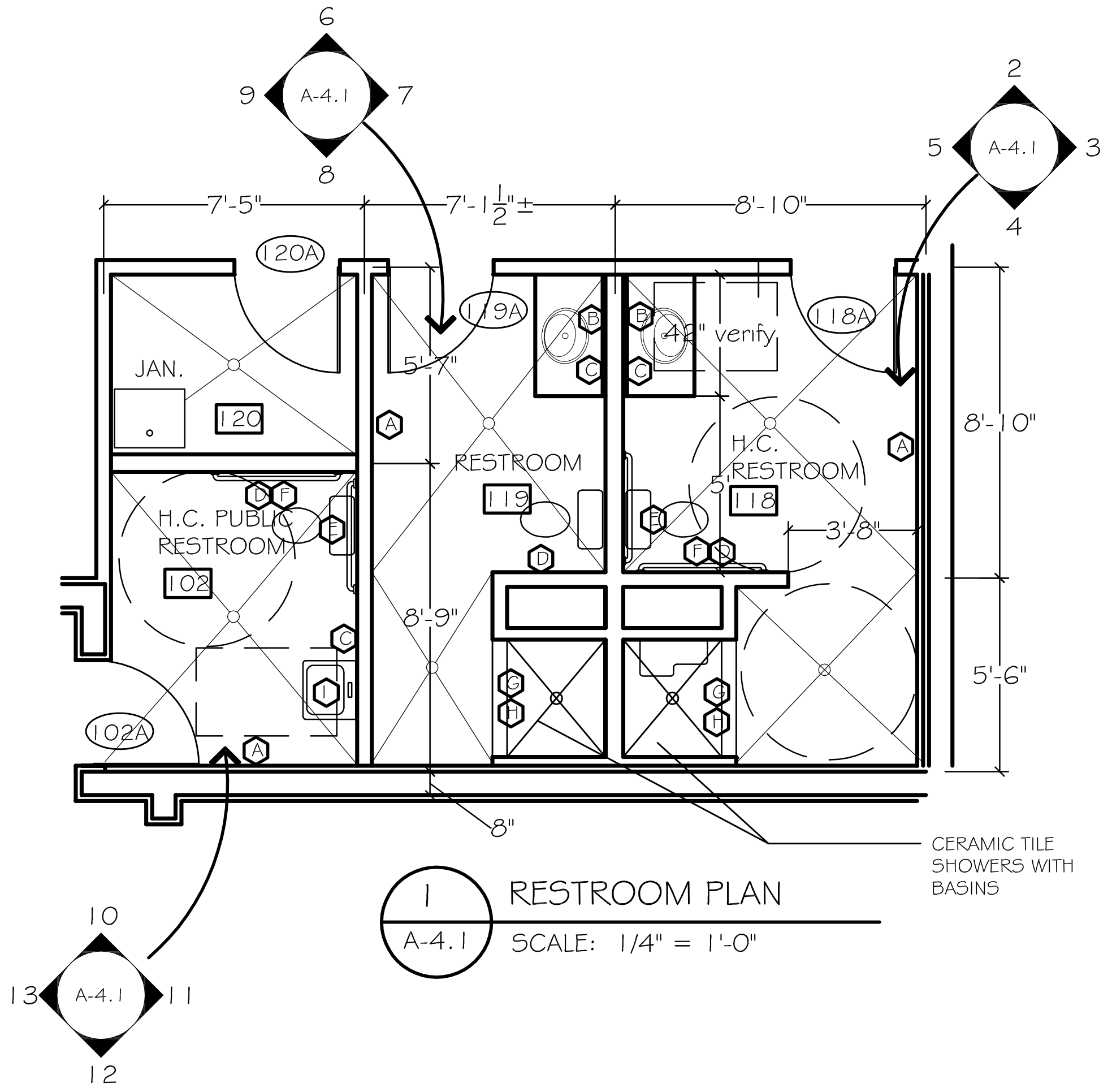
6
9
7
8
A-4.1
2
5
3
4
7'-5"
7'-1 1/2"±
8'-10"
120A
JAN.
120
119A
5'-7"
RESTROOM
119
42" verify
118A
H.C. RESTROOM
118
3'-8"
H.C. PUBLIC RESTROOM
102
102A
8'-9"
8'-10"
5'-6"
8"
A
B
C
D
E
F
G
H
I
CERAMIC TILE SHOWERS WITH BASINS
10
13
11
12

1 RESTROOM PLAN
A-4.1 SCALE: 1/4" = 1'-0"

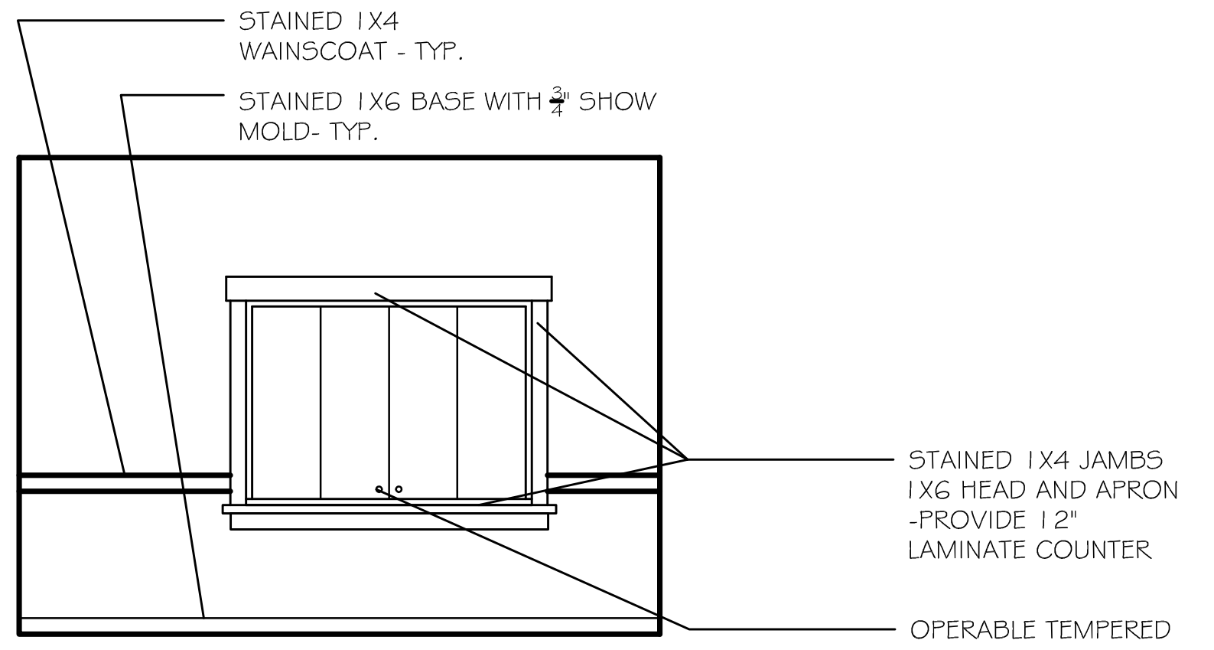
STAINED 1X4 WAINSCOAT - TYP.
STAINED 1X6 BASE WITH ¾" SHOW MOLD- TYP.
STAINED 1X4 JAMBS 1X6 HEAD AND APRON -PROVIDE 12" LAMINATE COUNTER
OPERABLE TEMPERED GLASS TRANSACTION WINDOW

19 LOBBY #101
A-4.1 SCALE: 1/4" = 1'-0"

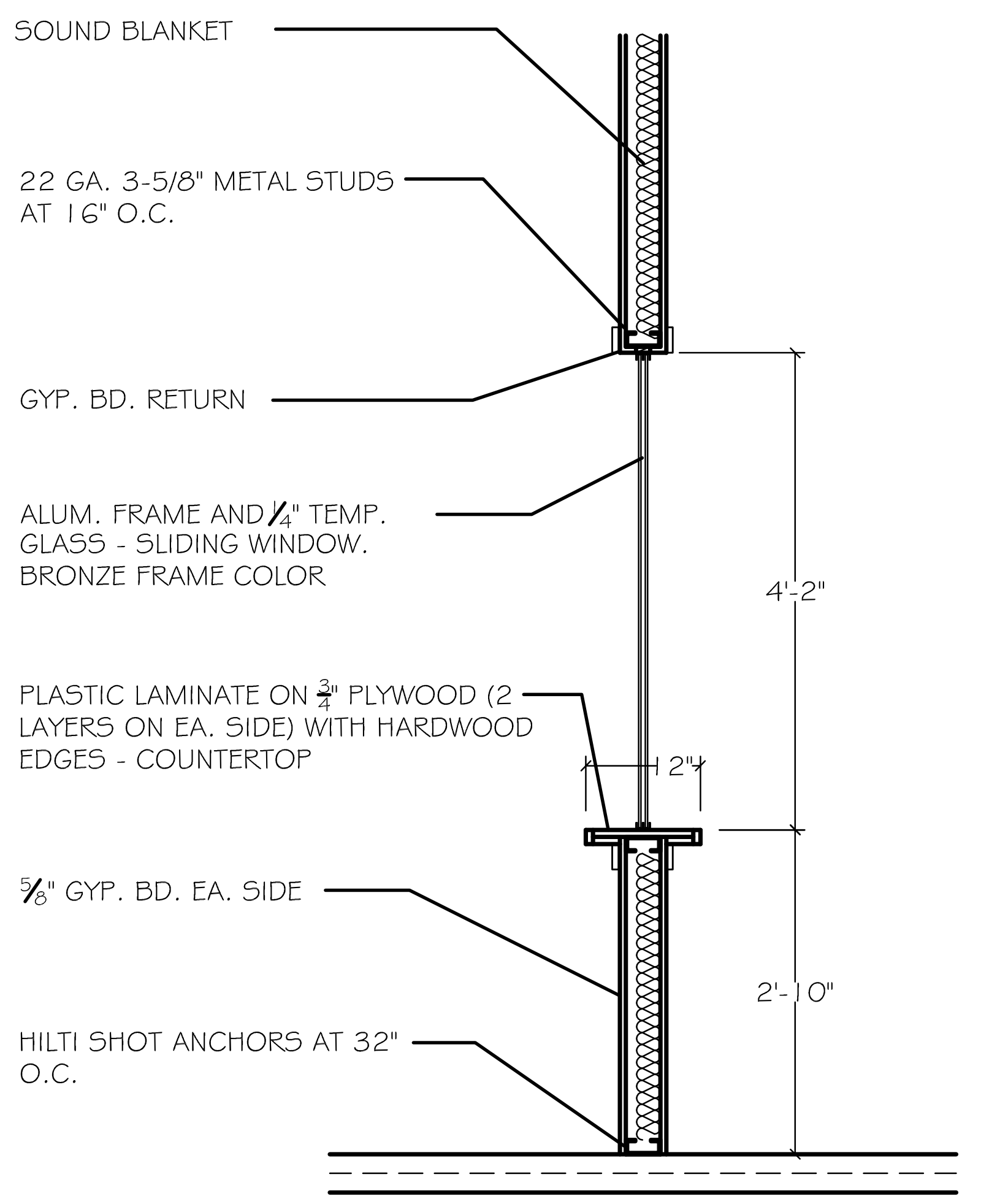
SOUND BLANKET
22 GA. 3-5/8" METAL STUDS AT 16" O.C.
GYP. BD. RETURN
ALUM. FRAME AND ¼" TEMP. GLASS - SLIDING WINDOW. BRONZE FRAME COLOR
PLASTIC LAMINATE ON ¾" PLYWOOD (2 LAYERS ON EA. SIDE) WITH HARDWOOD EDGES - COUNTERTOP
12"
⅝" GYP. BD. EA. SIDE
HILTI SHOT ANCHORS AT 32" O.C.
4'-2"
2'-10"

20 SLIDING WINDOW SECTION
A-4.1 SCALE: 3/4" = 1'-0"

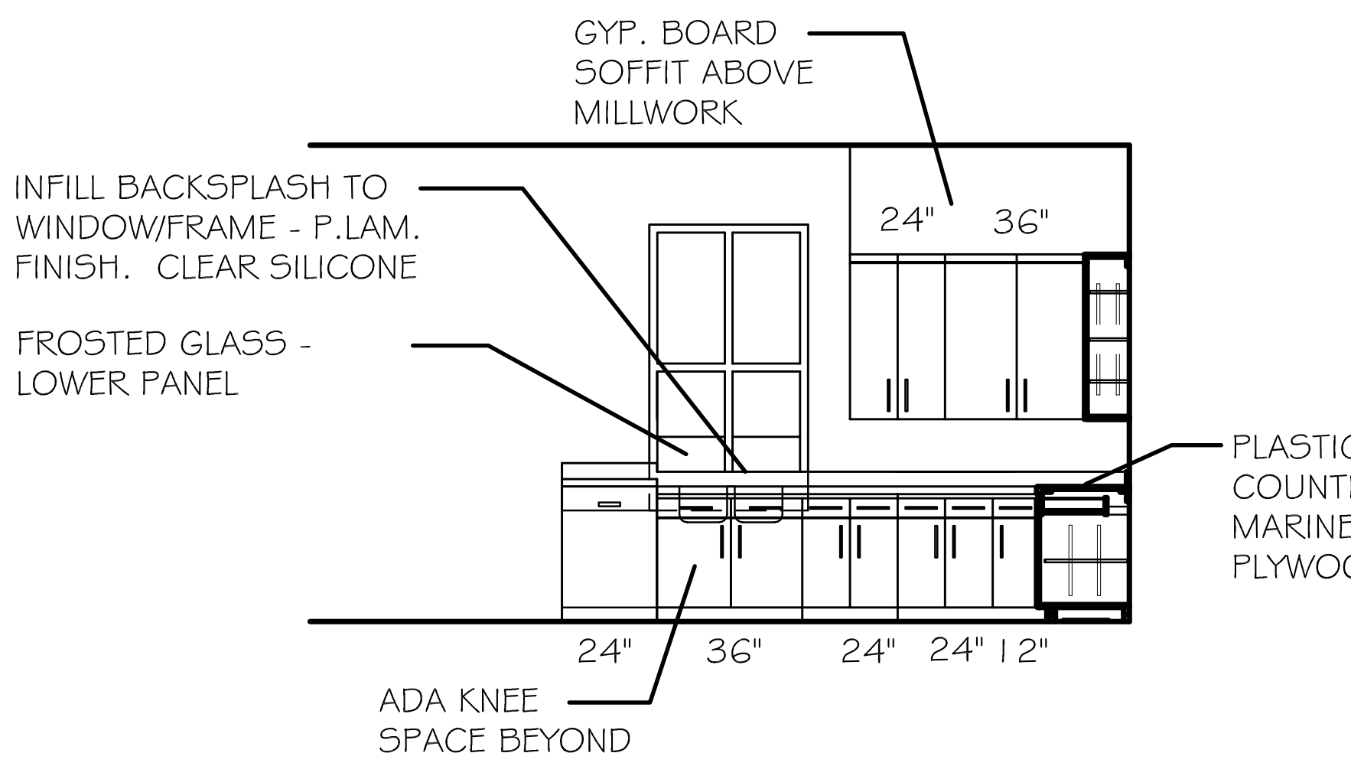
GYP. BOARD SOFFIT ABOVE MILLWORK
INFILL BACKSPLASH TO WINDOW/FRAME - P.LAM. FINISH. CLEAR SILICONE
FROSTED GLASS - LOWER PANEL
24"
36"
24"
36"
24"
24"
12"
ADA KNEE SPACE BEYOND

21 KTICHEN #116
A-4.1 SCALE: 1/4" = 1'-0"

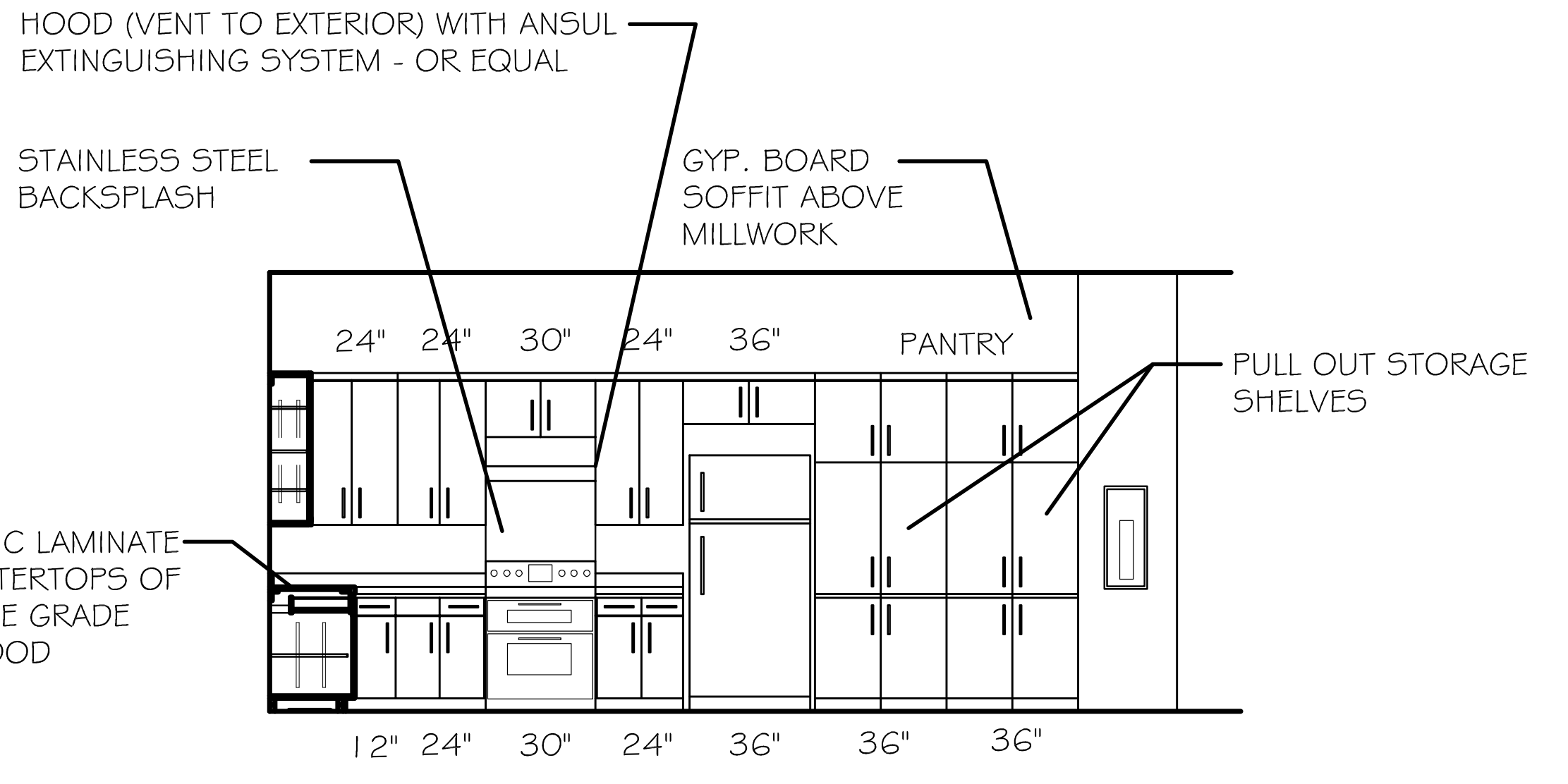
HOOD (VENT TO EXTERIOR) WITH ANSUL EXTINGUISHING SYSTEM - OR EQUAL
STAINLESS STEEL BACKSPLASH
GYP. BOARD SOFFIT ABOVE MILLWORK
PLASTIC LAMINATE COUNTERTOPS OF MARINE GRADE PLYWOOD
24"
24"
30"
24"
36"
PANTRY
PULL OUT STORAGE SHELVES
12"
24"
30"
24"
36"
36"
36"

22 KTICHEN #116
A-4.1 SCALE: 1/4" = 1'-0"

ALL INTERIOR SIDES OF ALL WINDOWS DOORS TO HAVE STAIN-GRADE WOOD TRIM.
JAMBS TO BE 1X4 AND HEAD TO BE 1X6 WITH 1" OVERHANG PAST JAMB. ALL ROOMS WITH LVT FLOORING TO HAVE ¾" STAINED SHOE MOLD. - TYPICAL

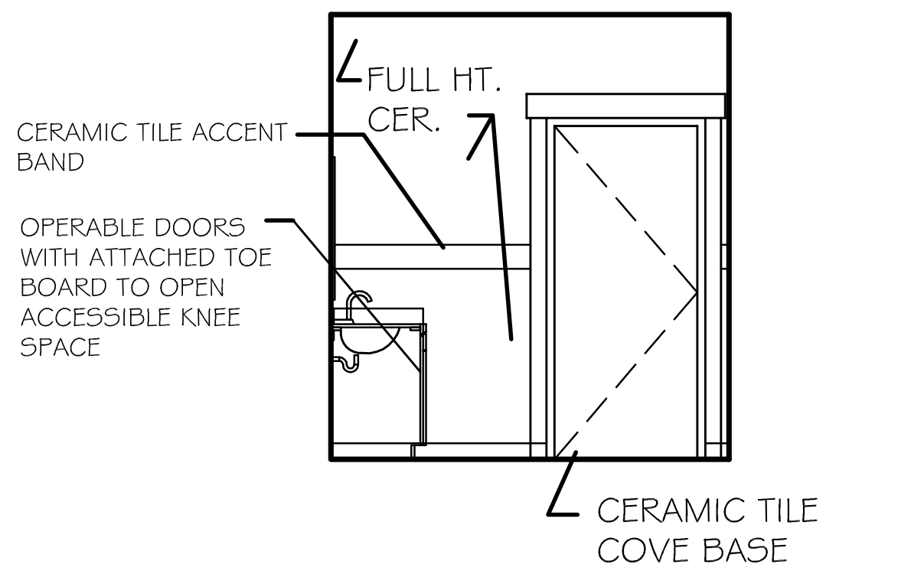
CERAMIC TILE ACCENT BAND
OPERABLE DOORS WITH ATTACHED TOE BOARD TO OPEN ACCESSIBLE KNEE SPACE
FULL HT. CER.
CERAMIC TILE COVE BASE

2 H.C. BATH #118
A-4.1 SCALE: 1/4" = 1'-0"

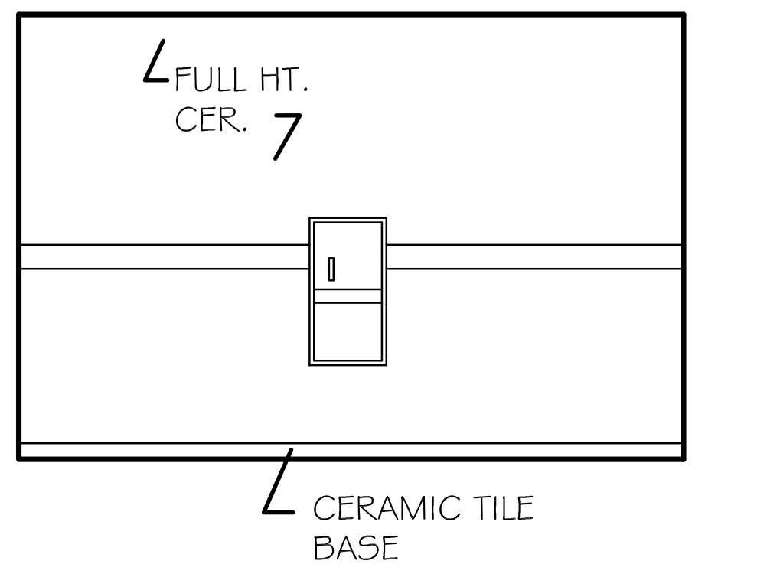
FULL HT. CER.
CERAMIC TILE BASE

3 H.C. BATH #118
A-4.1 SCALE: 1/4" = 1'-0"

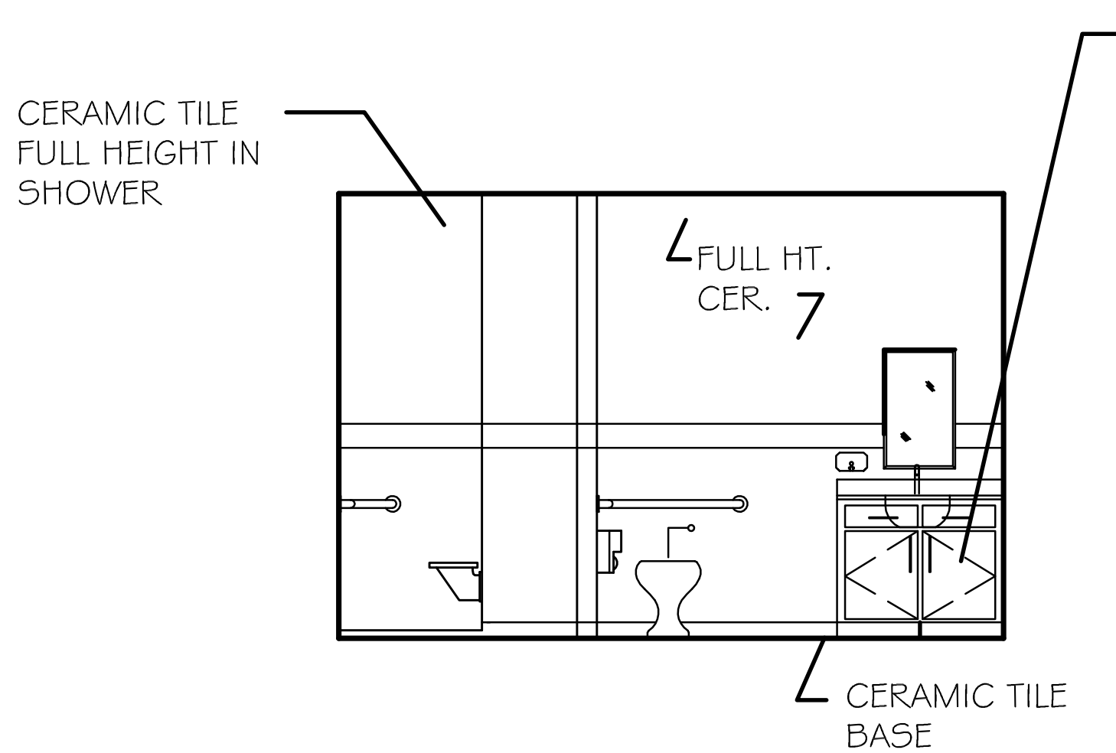
CERAMIC TILE FULL HEIGHT IN SHOWER
FULL HT. CER.
OPERABLE DOORS WITH ATTACHED TOE BOARD TO OPEN ACCESSIBLE KNEE SPACE
CERAMIC TILE BASE

4 H.C. BATH #118
A-4.1 SCALE: 1/4" = 1'-0"

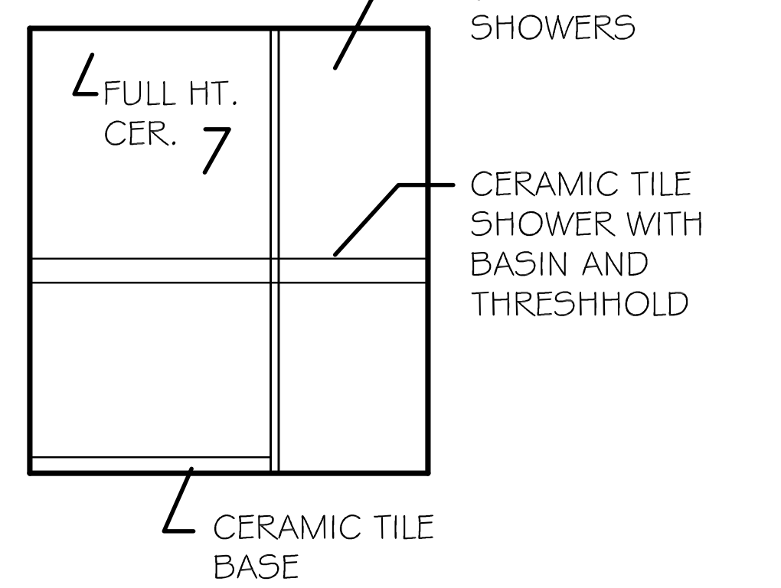
FULL HT. CER.
CERAMIC TILE ON 3 SIDES ABOVE SHOWERS
CERAMIC TILE SHOWER WITH BASIN AND THRESHHOLD
CERAMIC TILE BASE

5 H.C. BATH #118
A-4.1 SCALE: 1/4" = 1'-0"

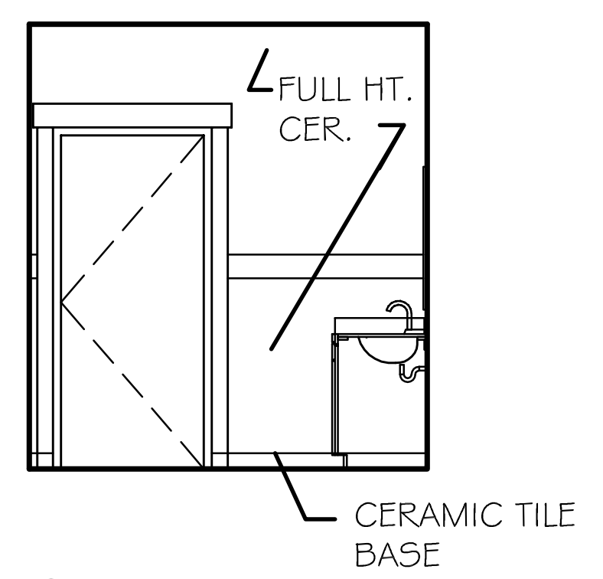
FULL HT. CER.
CERAMIC TILE BASE

6 BATH #119
A-4.1 SCALE: 1/4" = 1'-0"

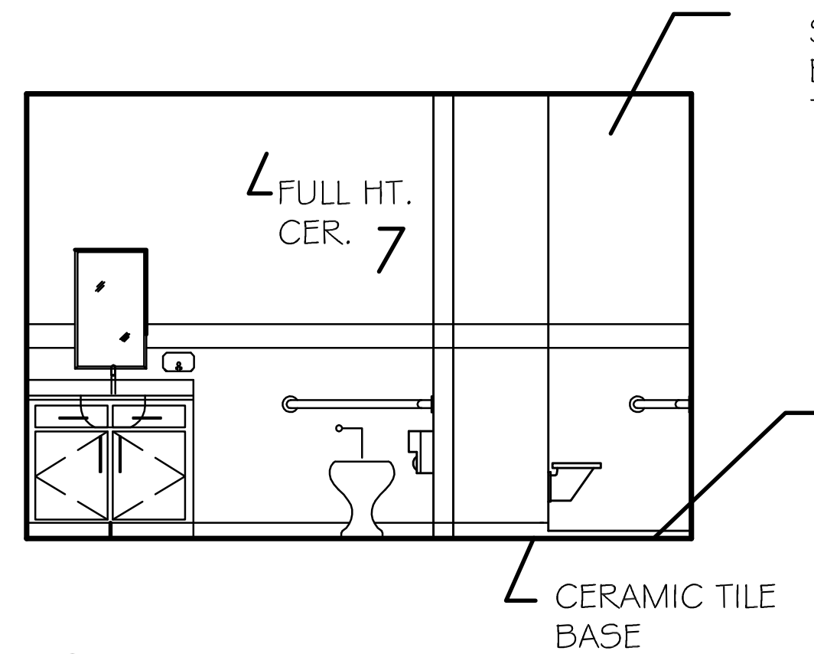
FULL HT. CER.
CERAMIC TILE BASE

7 BATH #119
A-4.1 SCALE: 1/4" = 1'-0"

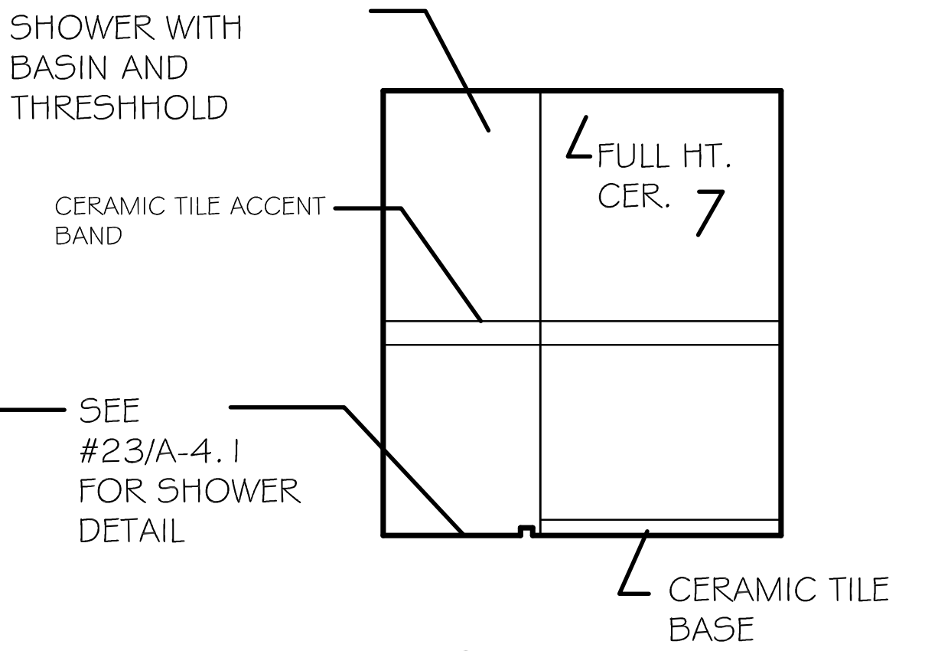
CERAMIC TILE SHOWER WITH BASIN AND THRESHHOLD
CERAMIC TILE ACCENT BAND
FULL HT. CER.
SEE #23/A-4.1 FOR SHOWER DETAIL
CERAMIC TILE BASE

8 BATH #119
A-4.1 SCALE: 1/4" = 1'-0"

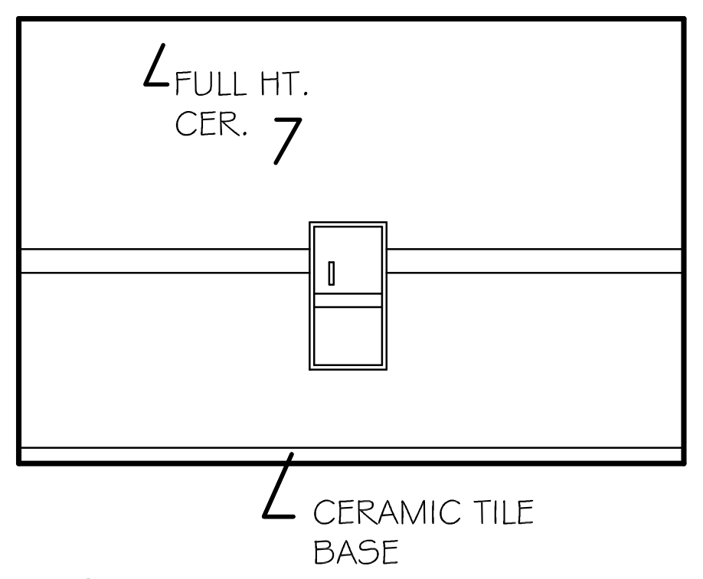
FULL HT. CER.
CERAMIC TILE BASE

9 BATH #119
A-4.1 SCALE: 1/4" = 1'-0"

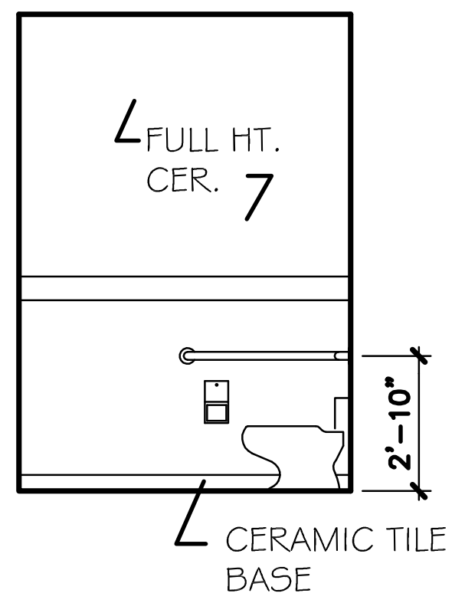
FULL HT. CER.
2'-10"
CERAMIC TILE BASE

10 PUBLIC #102
A-4.1 SCALE: 1/4" = 1'-0"

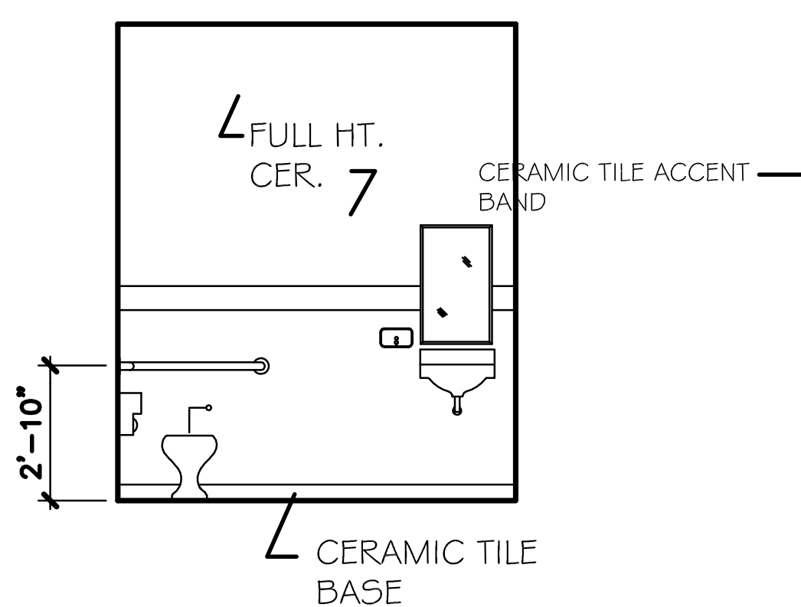
FULL HT. CER.
CERAMIC TILE ACCENT BAND
2'-10"
CERAMIC TILE BASE

11 PUBLIC #102
A-4.1 SCALE: 1/4" = 1'-0"

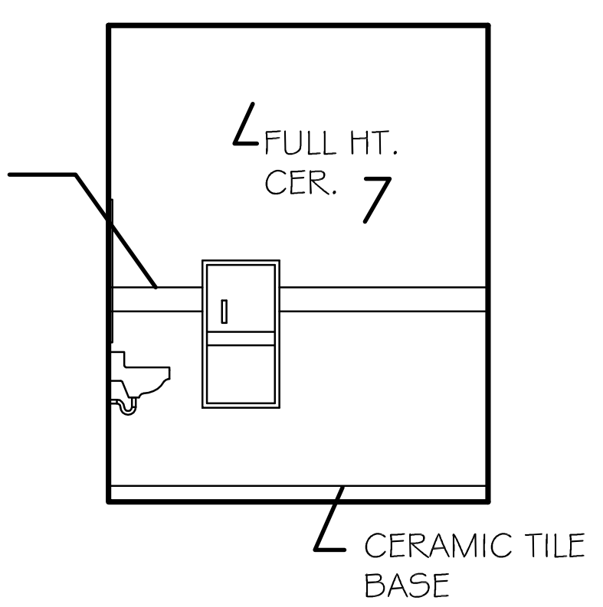
FULL HT. CER.
CERAMIC TILE BASE

12 PUBLIC #102
A-4.1 SCALE: 1/4" = 1'-0"

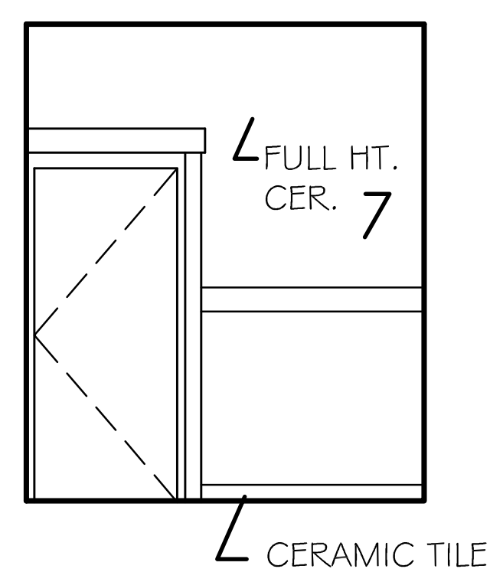
FULL HT. CER.
CERAMIC TILE BASE

13 PUBLIC #102
A-4.1 SCALE: 1/4" = 1'-0"

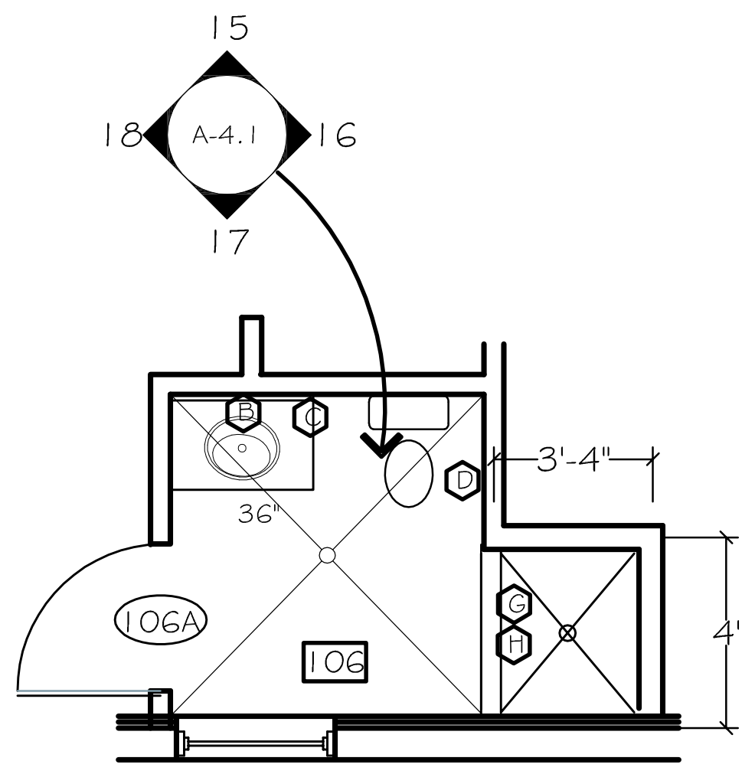
15
18
A-4.1
16
17
B
C
D
G
H
36"
3'-4"
4'
106A
106

14 PUBLIC #102
A-4.1 SCALE: 1/4" = 1'-0"

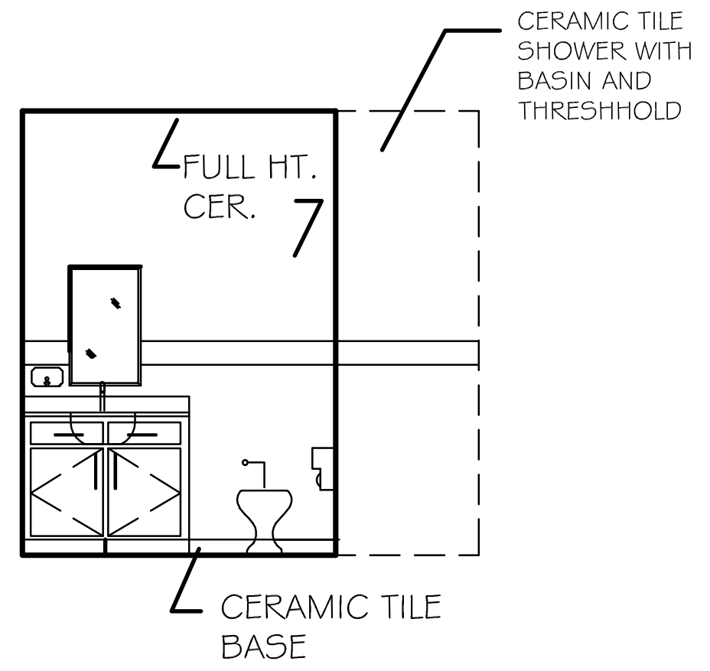
CERAMIC TILE SHOWER WITH BASIN AND THRESHHOLD
FULL HT. CER.
CERAMIC TILE BASE

15 PUBLIC #102
A-4.1 SCALE: 1/4" = 1'-0"

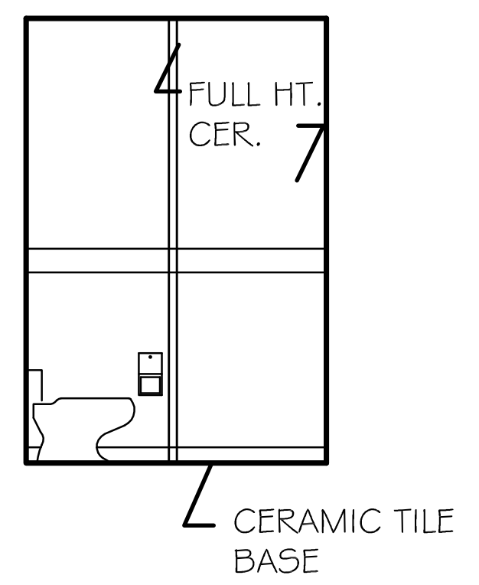
FULL HT. CER.
CERAMIC TILE BASE

16 PUBLIC #102
A-4.1 SCALE: 1/4" = 1'-0"

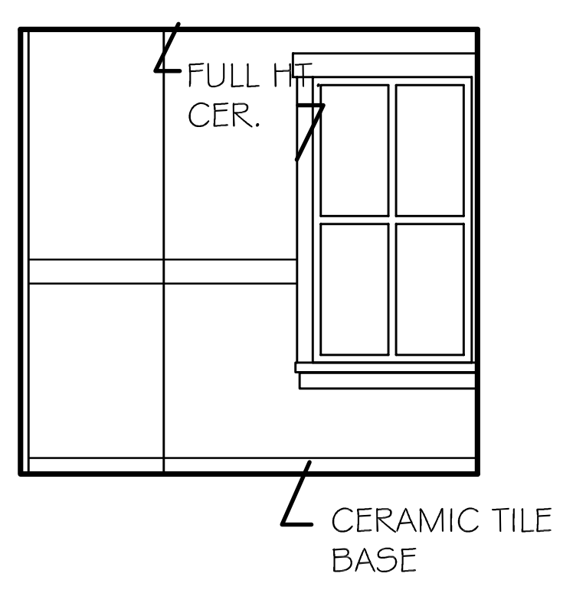
FULL HT. CER.
CERAMIC TILE BASE

17 PUBLIC #102
A-4.1 SCALE: 1/4" = 1'-0"

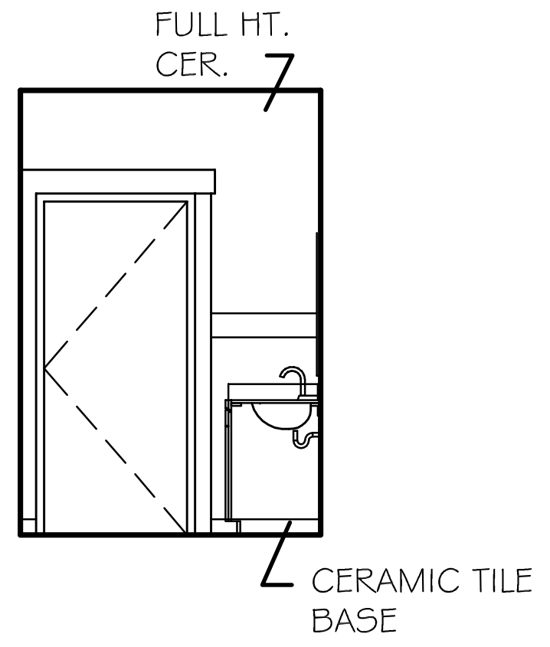
FULL HT. CER.
CERAMIC TILE BASE

18 PUBLIC #102
A-4.1 SCALE: 1/4" = 1'-0"

ALL INTERIOR SIDES OF ALL WINDOWS DOORS TO HAVE STAIN-GRADE WOOD TRIM.
JAMBS TO BE 1X4 AND HEAD TO BE 1X6 WITH 1" OVERHANG PAST JAMB. ALL ROOMS WITH LVT FLOORING TO HAVE ¾" STAINED SHOE MOLD. - TYPICAL

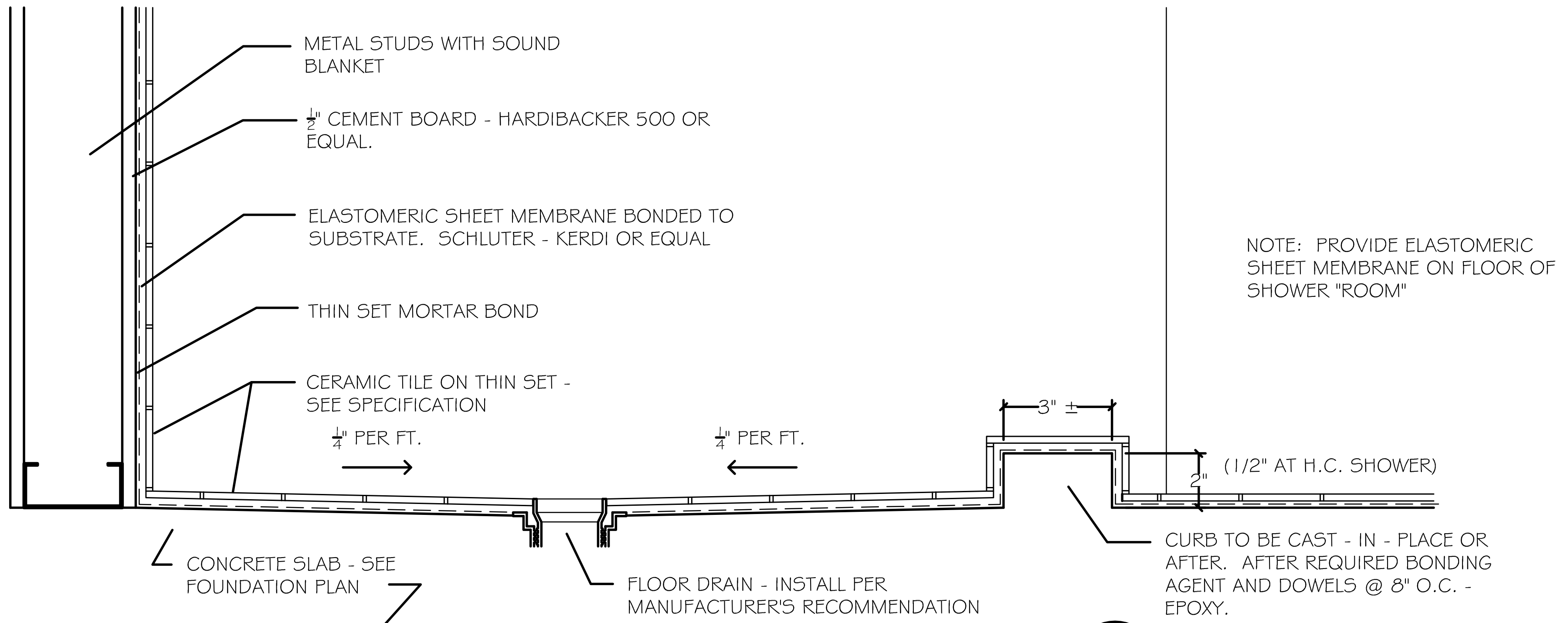
METAL STUDS WITH SOUND BLANKET
½" CEMENT BOARD - HARDIBACKER 500 OR EQUAL.
ELASTOMERIC SHEET MEMBRANE BONDED TO SUBSTRATE. SCHLUTER - KERDI OR EQUAL
THIN SET MORTAR BOND
CERAMIC TILE ON THIN SET - SEE SPECIFICATION
¼" PER FT.
¼" PER FT.
3" ±
2"
(1/2" AT H.C. SHOWER)
CONCRETE SLAB - SEE FOUNDATION PLAN
FLOOR DRAIN - INSTALL PER MANUFACTURER'S RECOMMENDATION
CURB TO BE CAST - IN - PLACE OR AFTER. AFTER REQUIRED BONDING AGENT AND DOWELS @ 8" O.C. - EPOXY.

NOTE: PROVIDE ELASTOMERIC SHEET MEMBRANE ON FLOOR OF SHOWER "ROOM"

23 SHOWER DETAIL
A-4.1 SCALE: 3" = 1'-0"

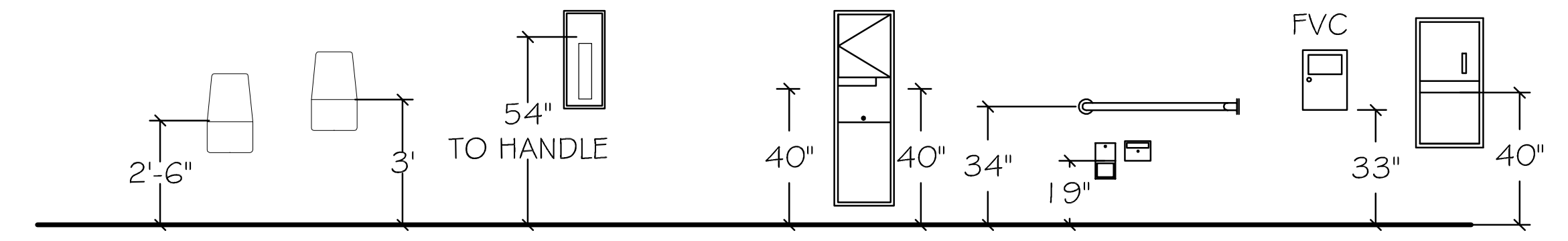
2'-6"
3'
54" TO HANDLE
40"
40"
34"
19"
FVC
33"
40"

NOTE: MAINTAIN 30" X 48" CLEAR FLOOR SPACE AT DRINKING FOUNTAINS

TOILET ACCESSORY NOTES:

1. ALL ACCESSORIES SHALL BE CHROME FINISH.

2. COORDINATE LOCATION OF ACCESSORIES WITH NECESSARY BLOCKING, ELECTRICAL SWITCH AND WIRING LOCATIONS ETC. TO ENSURE PROPER CLEARANCES AND MOUNTING HEIGHTS. NOTIFY ARCHITECT OF ANY DISCREPANCIES BEFORE PROCEEDING.

TOILET ACCESSORIES

Item	Description	Model No.	Mounting Ht.
A	Paper Towel disp/Waste Recp.	Bobrick # B-369	40" TO DISPENSER
B	Mirror with Shelf	Bobrick # B-166 2436	40" TO BOTTOM
C	Soap Dispensor	Bobrick # B-2112	40" TO SPOUT
D	Toilet Tissue Disp.	Bobrick # B-2888	19" TO CENTERLINE
E	36" Handicap Grab Bar-Non-slip grip	Bobrick # B-6806.99 X 36"	34" A.F.F.
F	42" Handicap Grab Bar-Non-slip grip	Bobrick # B-6806.99 X 42"	34" A.F.F
G	Shower Curtain Rod-Concealed mt.	Bobrick # B-207 (36")	74" VERIFY
H	Shower hooks & curtain	Bobrick #204-1&204-2	
I	Mirror with Channel Frame	Bobrick # B-165 2436	40" TO BOTTOM
		Bobrick # B-254	

APPLIANCE NOTES: OWNER TO PROVIDE EQUIPMENT LISTED AS #1-4, 7,8 &9- CONTRACTOR TO PROVIDE ITEMS 5 AND 6. CONTRACTOR TO INSTALL & PROVIDE ALL ACCESSORIES/CONNECTIONS FOR FULLY FUNCTIONING EQUIPMENT. CONTRACTOR TO PROVIDE HOOD AND EXTINGUISHING SYSTEM (#5 & 6)

NOTE: ALL APPLIANCES ARE TO BE GE OR EQUAL BASED ON MODEL LISTED BELOW

1. GE SIDE-BY-SIDE STAINLESS REFRIGERATOR. MODEL # **PSE25KSHSS**

2. GE DISHWASHER - STAINLESS BUILT-IN DISHWASHER WITH FRONT CONTROLS, MODEL # **GDF570SSFSS**

3. GE SPACEMAKER UNDER COUNTER REFRIGERATOR - STAINLESS - MODEL **# GCE06GSHSB. VERIFY COUNTER CLEARANCE PRIOR CABINET FABRICATION.**

4. GE PROFILE FREE STANDING 30" ELECTRIC DOUBLE OVEN RANGE - STAINLESS - MODEL # **JB870SFSS. VERIFY CONNECTIONS**

5. GE PROFILE 30" DESIGNER HOOD - STAINLESS #- MODEL **#CV936MSS**

. VENT TO EXTERIOR. PROVIDED BY CONTRACTOR

6. PROVIDE ANSUL EXTINGUISHING SYSTEM PROVIDED BY CONTRACTOR

- AUTOMATIC SUPPRESSION SYSTEM AT HOOD- VENT TO EXTERIOR - ACCEPTABLE MANUFACTURERS ARE:

A) GUARDIAN - 21ST CENTURY

B) PENN-ALL HOOD PROTECTION SYSTEMS

C) PYTRONICS - PYR-A-LON

D) ANSUL

PROVIDE ELECTRICAL SHUNT AND CONNECTION TO FIRE ALARM WITH ACTIVATION OF AUTOMATIC SUPPRESSION SYSTEM.

7. WASHER - GE 4.8 CAPACITY RIGHTHEIGHT DESIGN FRONT LOAD WASHER. MODEL # **GFWR4805FMC. METALLIC.**

8. DRYER - GE 8.3 CAPACITY RIGHTHEIGHT DESIGN FRONT LOAD ELECTRIC DRYER. MODEL # **GFDR485EFMC**

9. GEAR WASH BE MILLNOR 30022 T6X 60 POUND. (OR EQUAL)

CONTRACTOR TO PROVIDE ALL REQUIRED UTILITIES, ACCESSORIES, AND ALL REQUIRED ELECTRICAL, PLUMBING, AND MECHANICAL COORDINATION FOR FULLY OPERATIONAL KITCHEN APPLIANCES.

MILLWORK NOTES:

1. SUBMIT COMPREHENSIVE SHOP DRAWINGS FOR ALL MILLWORK. SHOW ALL DETAILS, HARDWARE, ANCHORING, ANCHORING DEVICES, DIMENSIONS, BLOCKING, ETC.
2. CABINETS TO BE PLYWOOD. NO PARTICLE BOARD/MDF/OSB ACCEPTED. INTERIOR AND EXTERIOR TO BE PLASTIC LAMINATE. INTERIOR TO BE WHITE. ALLOW ONE COLOR FOR PLASTIC LAMINATE COUNTERTOPS AND ONE COLOR FOR CABINET FACES, DOORS, AND DRAWERS. COLORS ARE TO BE SELECTED FROM WILSONART COLOR SELECTIONS AND SHALL NOT BE LIMITED BY AVAILABILITY.
3. COORDINATE ALL RELATED WORK INCLUDING ELECTRICAL, PLUMBING, EQUIPMENT, ETC. AND PROVIDE ACCOMMODATIONS FOR SUCH.
4. PROVIDE ALL REQUIRED BLOCKING FOR MILLWORK INSTALLATION.
5. SEE SPECIFICATIONS FOR SPECIFIC PRODUCT INFORMATION.
6. COORDINATE MILLWORK WITH "BUILT" DIMENSIONS. SHOP DRAWINGS SHALL REFLECT ACTUAL VERIFIED DIMENSIONS.
7. ALL BASE CABINETS TO HAVE ONE ADJUSTABLE, FULL DEPTH SHELF.
8. ALL WALL CABINETS TO HAVE THREE FULL DEPTH, ADJUSTABLE SHELVES. WALL CABINETS SHALL BE 12" DEEP. UNITS ABOVE SINKS, REFRIGERATORS, STOVES, ETC. TO HAVE ONE FULL DEPTH, ADJUSTABLE SHELF.
9. ALL FRAMES, DOORS, AND DRAWER FACES TO BE 5/8" PLYWOOD.
10. PROVIDE EDGE BANDING ON ALL FOUR SIDES OF SHELVING - TYPICAL.
11. ALL MILLWORK TO BE EURO STYLE (FRAMELESS) TYPE WITH HARDWOOD WEBBING.
12. PROVIDE SQUARE 1 1/2" EDGES ON ALL COUNTERTOPS.
13. APPLY LAMINATE TO COUNTERTOP SIDES PRIOR TO APPLYING TOPS.
14. PROVIDE HARDWOOD SLEEPERS AT 24" O.C. UNDER ALL CABINETS - TYPICAL.
15. KITCHEN PULLS TO BE 8" LONG BAR PULLS (5" O.C. HOLES) - STAINLESS STEEL - SATIN FINISH. SUBMIT SHOP DRAWINGS

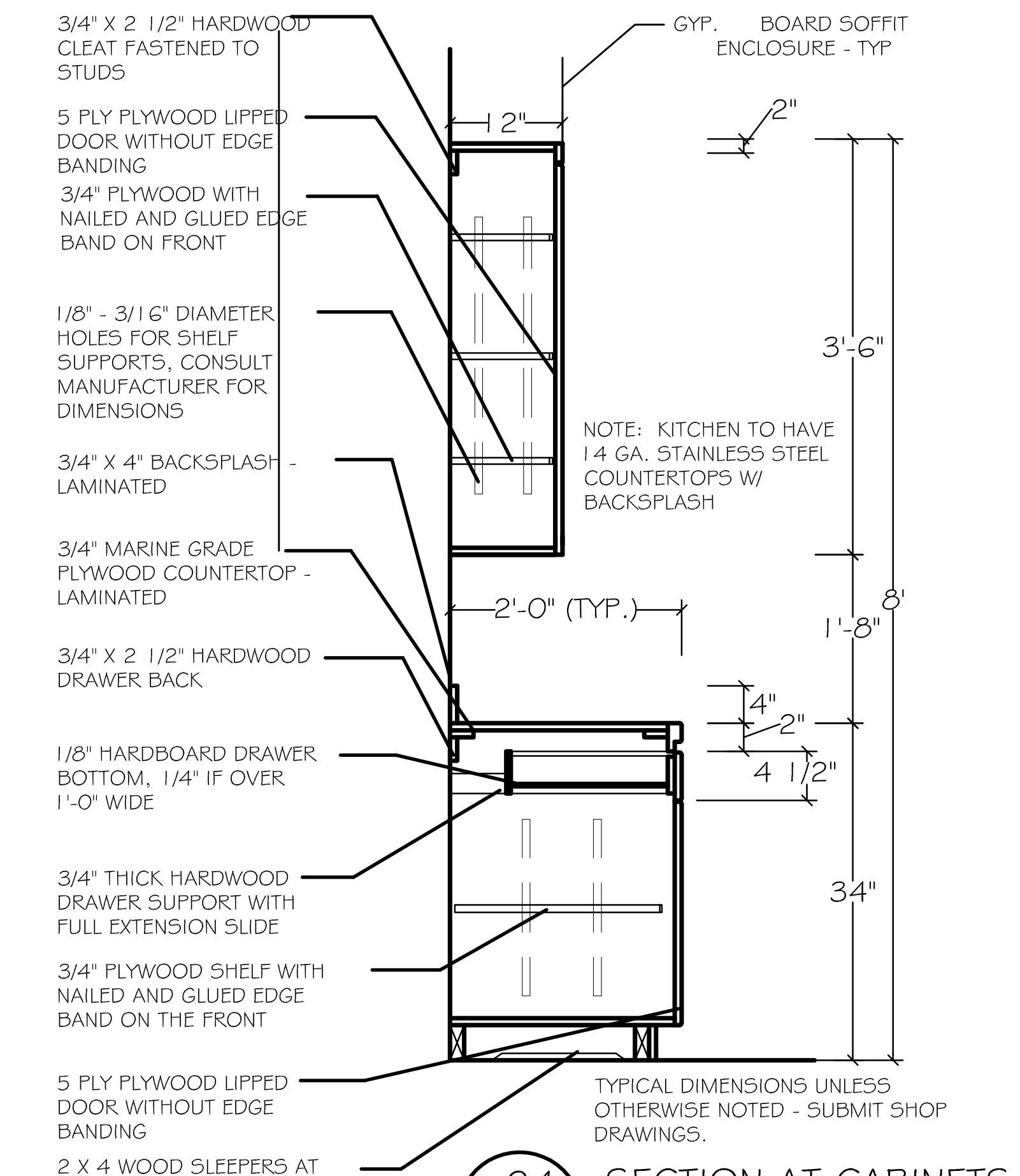
3/4" X 2 1/2" HARDWOOD CLEAT FASTENED TO STUDS
5 PLY PLYWOOD LIPPED DOOR WITHOUT EDGE BANDING
3/4" PLYWOOD WITH NAILED AND GLUED EDGE BAND ON FRONT
1/8" - 3/16" DIAMETER HOLES FOR SHELF SUPPORTS, CONSULT MANUFACTURER FOR DIMENSIONS
3/4" X 4" BACKSPLASH - LAMINATED
3/4" MARINE GRADE PLYWOOD COUNTERTOP - LAMINATED
3/4" X 2 1/2" HARDWOOD DRAWER BACK
1/8" HARDBOARD DRAWER BOTTOM, 1/4" IF OVER 1'-0" WIDE
3/4" THICK HARDWOOD DRAWER SUPPORT WITH FULL EXTENSION SLIDE
3/4" PLYWOOD SHELF WITH NAILED AND GLUED EDGE BAND ON THE FRONT
5 PLY PLYWOOD LIPPED DOOR WITHOUT EDGE BANDING
2 X 4 WOOD SLEEPERS AT 2'-8" O.C.
GYP. BOARD SOFFIT ENCLOSURE - TYP
12"
2"
3'-6"
8'
1'-8"
2'-0" (TYP.)
4"
2"
4 1/2"
34"

NOTE: KITCHEN TO HAVE 14 GA. STAINLESS STEEL COUNTERTOPS W/ BACKSPLASH

TYPICAL DIMENSIONS UNLESS OTHERWISE NOTED - SUBMIT SHOP DRAWINGS.

24 SECTION AT CABINETS
A-4.1 SCALE: 3/4" = 1'-0"

ISSUED FOR CONSTRUCTION. DATE:

REVISIONS

Number	Date:	Remarks:	Number	Date:	Remarks:
X	00-00-00	N/A			

CONSULTANTS

CARTER WATKINS ASSOCIATES
ARCHITECTS, INC.
POST OFFICE BOX 1004
137 EAST WASHINGTON STREET
MONROE, GEORGIA 30655
Fax: 770/267-1064
email@carterwatkins.com www.carterwatkins.com

SEAL
BENJAMIN MERCER CARTER

BARTOW COUNTY
FIRE STATION NO. 9
Battalion Headquarters

SHEET TITLE:
INTERIORS, MILLWORK AND SHOWER DETAILS

PRINTED:

NUMBER:
A-4.1

DESIGN CRITERIA:

1. FRAMING AT GABLES SHOULD RESIST 155 MPH WIND LOADS. MODIFY END GABLES ACCORDINGLY.

2. SUBMIT SHOP DRAWINGS FOR GABLES AND ROOF TRUSSES.

3. ROOF DESIGN LOADS TO INCLUDE COLLATERAL LOADS OF ALL MECHANICAL, ELECTRICAL, ETC.. LOADS TO BE 20 PSF LIVE LOAD AND 25 PSF DEAD LOAD.

4. ENGINEERED ROOF TRUSSES AND GABLES TO BE DESIGNED BY A GEORGIA REGISTERED ENGINEERED.

5. PROVIDE CROSS BRACING AND MID-POINT BRACING AS REQUIRED.

6. CONTRACTOR TO PROVIDE ALL TEMPORARY BRACING AND SHORING FOR TRUSS AND ROOF INSTALLATION.

7. PROVIDE 5/8" FIRE TREATED PLYWOOD ROOF DECKING

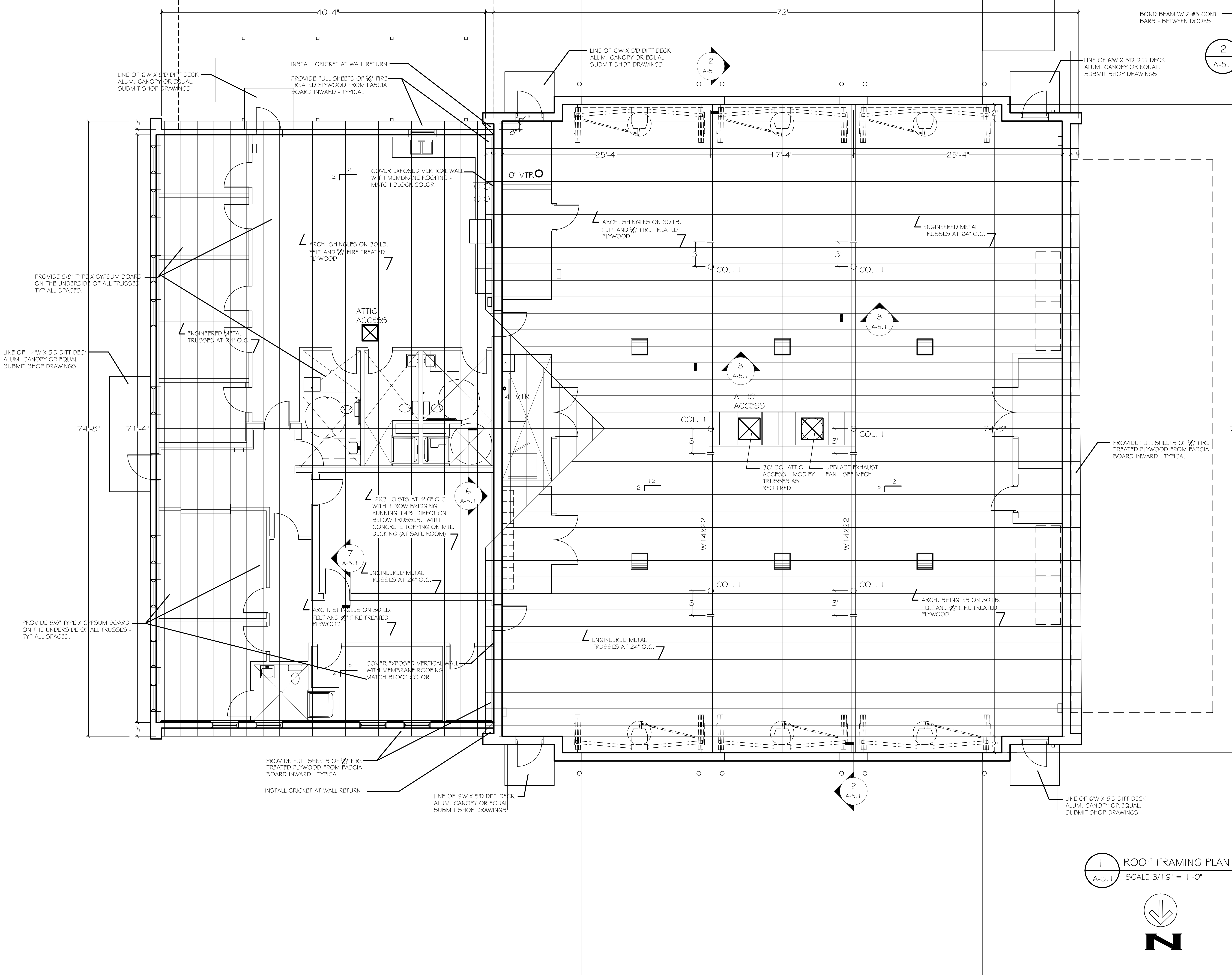
40'-4"
72'
LINE OF 6'W X 5'D DITT DECK ALUM. CANOPY OR EQUAL. SUBMIT SHOP DRAWINGS
INSTALL CRICKET AT WALL RETURN
PROVIDE FULL SHEETS OF 5/8" FIRE TREATED PLYWOOD FROM FASCIA BOARD INWARD - TYPICAL
4"
8"
2'
25'-4"
17'-4"
25'-4"
10" VTR
COVER EXPOSED VERTICAL WALL WITH MEMBRANE ROOFING - MATCH BLOCK COLOR
12
2
ARCH. SHINGLES ON 30 LB. FELT AND 5/8" FIRE TREATED PLYWOOD
ENGINEERED METAL TRUSSES AT 24" O.C.
PROVIDE 5/8" TYPE X GYPSUM BOARD ON THE UNDERSIDE OF ALL TRUSSES - TYP ALL SPACES.
ATTIC ACCESS
LINE OF 14'W X 5'D DITT DECK ALUM. CANOPY OR EQUAL. SUBMIT SHOP DRAWINGS
74'-8"
71'-4"
4" VTR
3'
COL. 1
3
A-5.1
2
A-5.1
36" SQ. ATTIC ACCESS - MODIFY TRUSSES AS REQUIRED
UPBLAST EXHAUST FAN - SEE MECH.
W14X22
74'-8"
78'-8"
6
A-5.1
12K3 JOISTS AT 4'-0" O.C. WITH 1 ROW BRIDGING RUNNING 14'8" DIRECTION BELOW TRUSSES. WITH CONCRETE TOPPING ON MTL. DECKING (AT SAFE ROOM)
7
A-5.1
N

1 ROOF FRAMING PLAN
A-5.1
SCALE 3/16" = 1'-0"

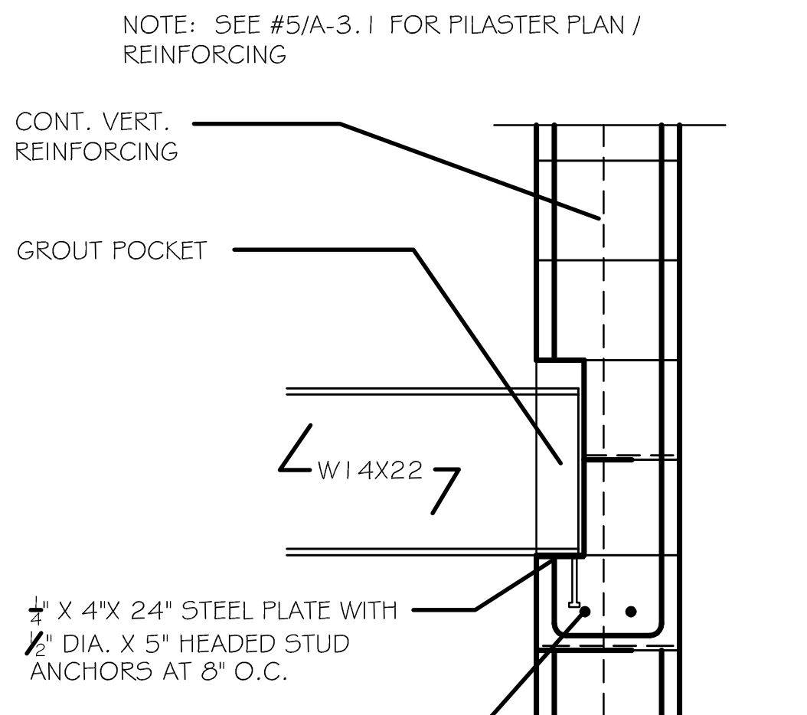
NOTE: SEE #5/A-3.1 FOR PILASTER PLAN / REINFORCING
CONT. VERT. REINFORCING
GROUT POCKET
W14X22
1/4" X 4"X 24" STEEL PLATE WITH 1/2" DIA. X 5" HEADED STUD ANCHORS AT 8" O.C.
BOND BEAM W/ 2-#5 CONT. BARS - BETWEEN DOORS

2 BEAM DETAIL
A-5.1
SCALE 3/4" = 1'-0"

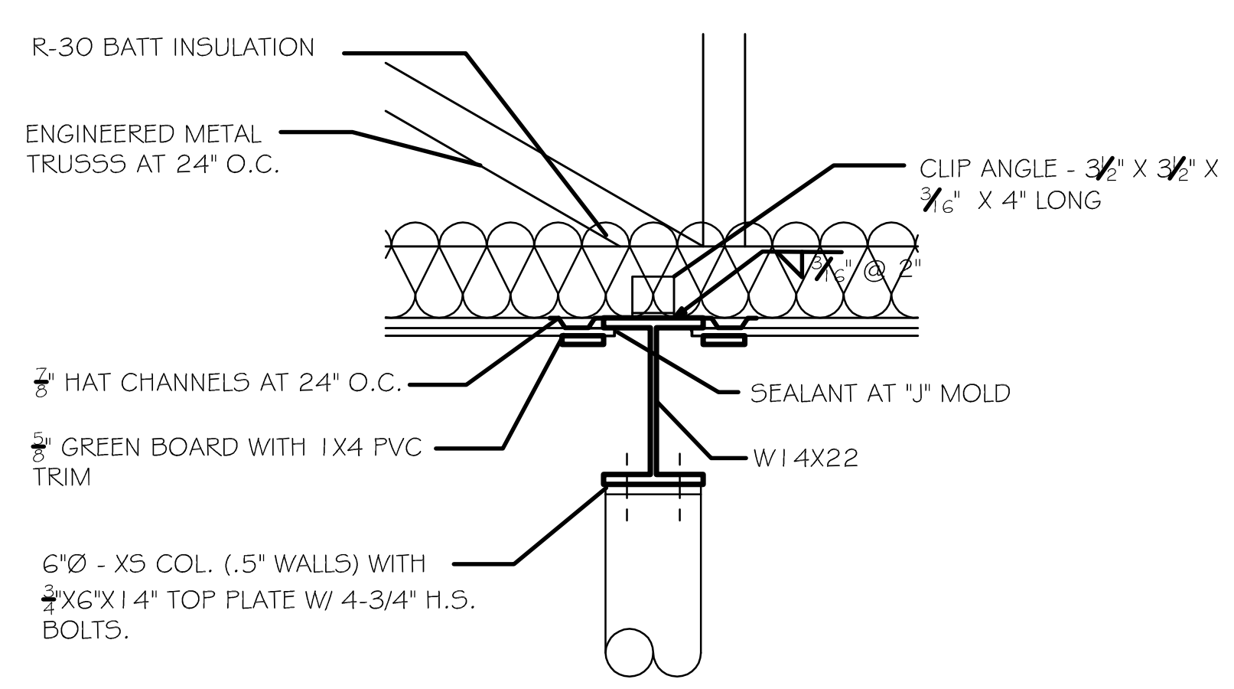
R-30 BATT INSULATION
ENGINEERED METAL TRUSSS AT 24" O.C.
CLIP ANGLE - 3½" X 3½" X 3/16" X 4" LONG
3/16" @ 2"
7/8" HAT CHANNELS AT 24" O.C.
SEALANT AT "J" MOLD
5/8" GREEN BOARD WITH 1X4 PVC TRIM
W14X22
6"Ø - XS COL. (.5" WALLS) WITH 3/4"X6"X14" TOP PLATE W/ 4-3/4" H.S. BOLTS.

3 BEAM DETAIL
A-5.1
SCALE 3/4" = 1'-0"

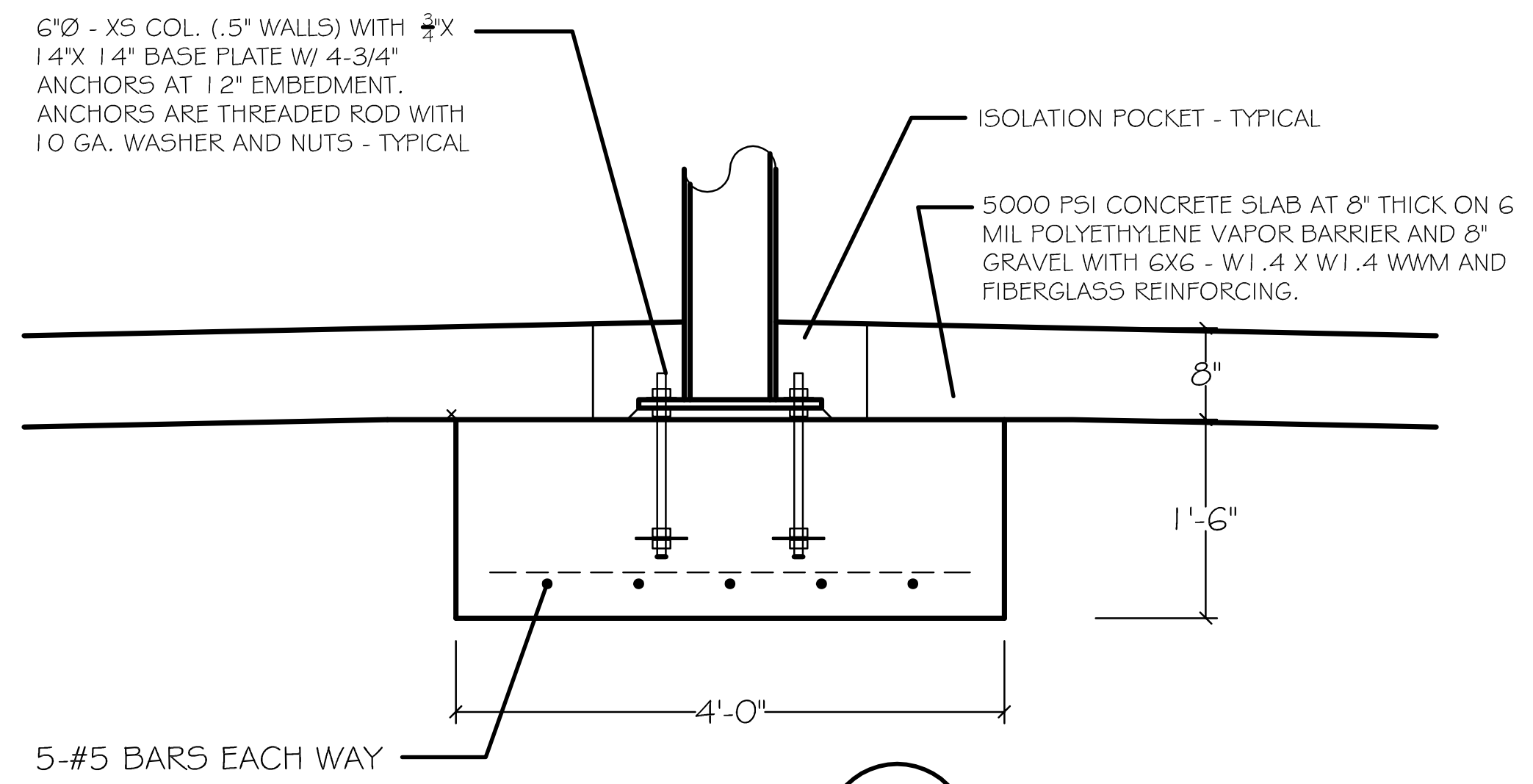
6"Ø - XS COL. (.5" WALLS) WITH 3/4"X 14"X 14" BASE PLATE W/ 4-3/4" ANCHORS AT 12" EMBEDMENT. ANCHORS ARE THREADED ROD WITH 10 GA. WASHER AND NUTS - TYPICAL
ISOLATION POCKET - TYPICAL
5000 PSI CONCRETE SLAB AT 8" THICK ON 6 MIL POLYETHYLENE VAPOR BARRIER AND 8" GRAVEL WITH 6X6 - W1.4 X W1.4 WWM AND FIBERGLASS REINFORCING.
8"
1'-6"
4'-0"
5-#5 BARS EACH WAY

4 COLUMN FOOTING
A-5.1
SCALE 3/4" = 1'-0"

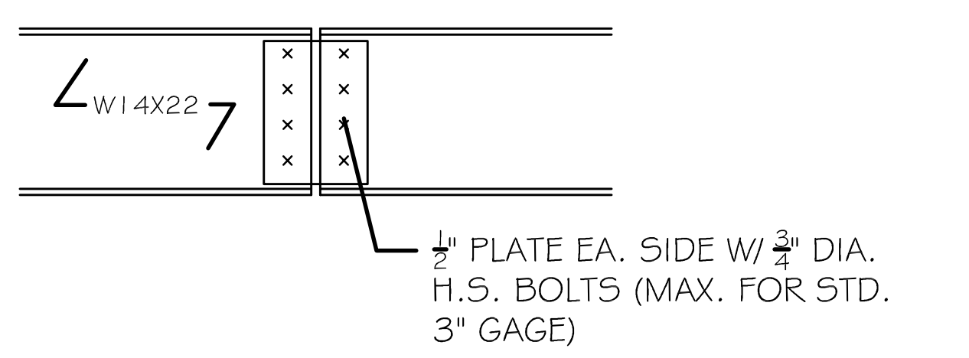
W14X22
1/2" PLATE EA. SIDE W/ 3/4" DIA. H.S. BOLTS (MAX. FOR STD. 3" GAGE)

5 SPLICE SECTION
A-5.1
SCALE 3/4" = 1'-0"

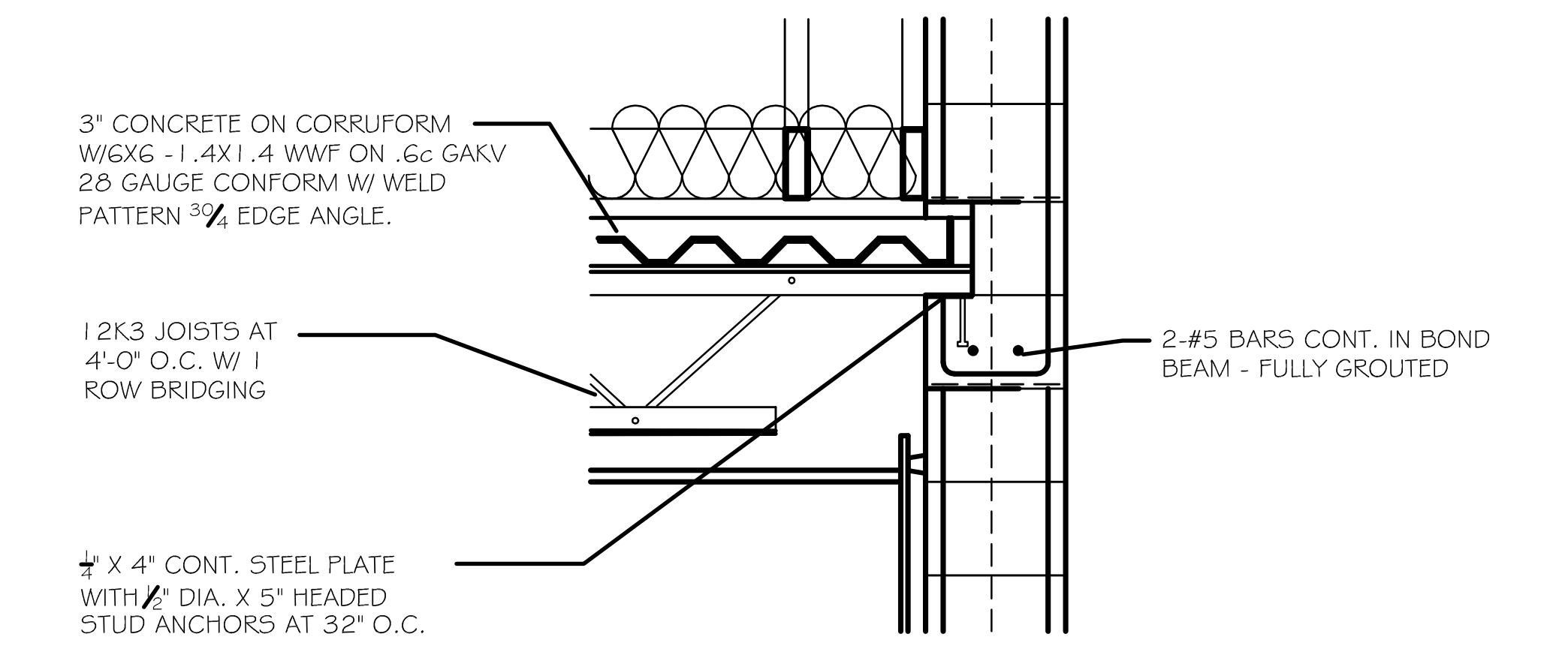
3" CONCRETE ON CORRUFORM W/6X6 -1.4X1.4 WWF ON .6c GAKV 28 GAUGE CONFORM W/ WELD PATTERN 30/4 EDGE ANGLE.
12K3 JOISTS AT 4'-0" O.C. W/ 1 ROW BRIDGING
1/4" X 4" CONT. STEEL PLATE WITH 1/2" DIA. X 5" HEADED STUD ANCHORS AT 32" O.C.
2-#5 BARS CONT. IN BOND BEAM - FULLY GROUTED

6 COLUMN FOOTING
A-5.1
SCALE 3/4" = 1'-0"

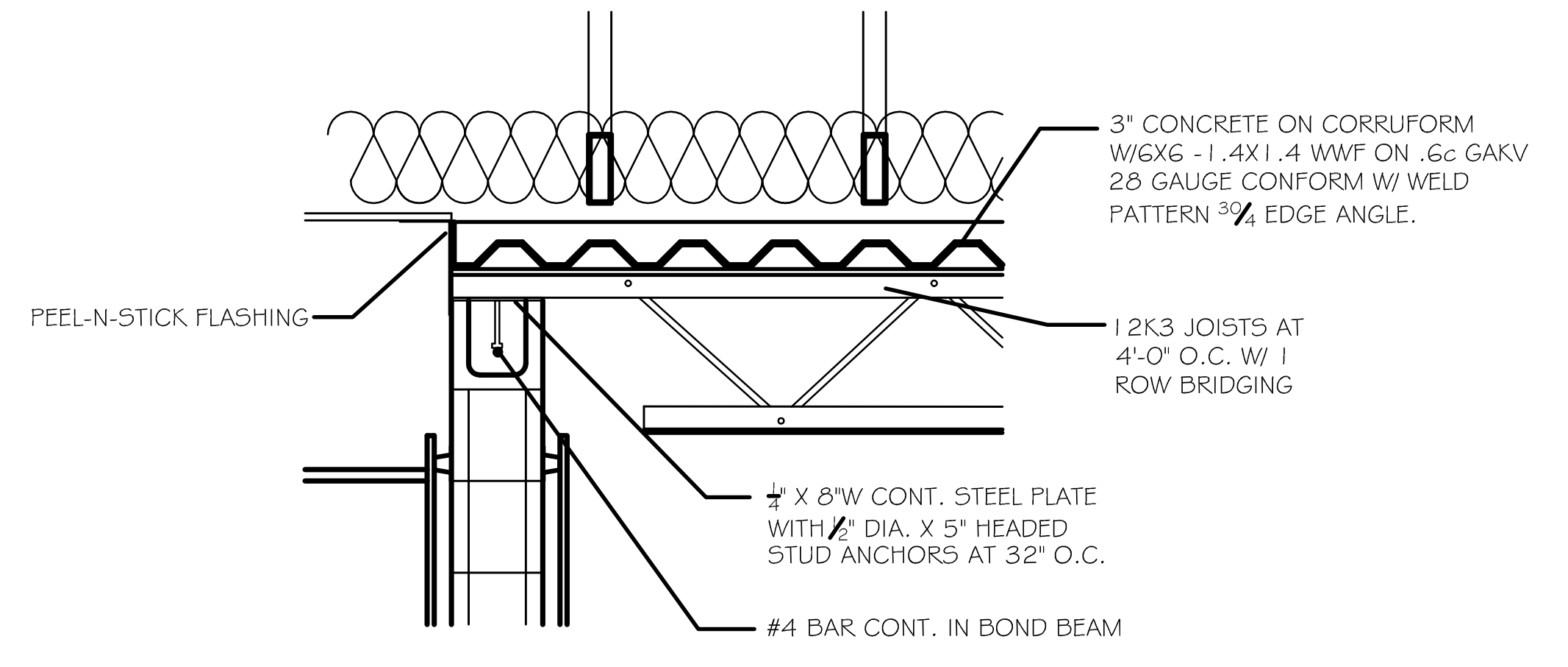
3" CONCRETE ON CORRUFORM W/6X6 -1.4X1.4 WWF ON .6c GAKV 28 GAUGE CONFORM W/ WELD PATTERN 30/4 EDGE ANGLE.
PEEL-N-STICK FLASHING
12K3 JOISTS AT 4'-0" O.C. W/ 1 ROW BRIDGING
1/4" X 8"W CONT. STEEL PLATE WITH 1/2" DIA. X 5" HEADED STUD ANCHORS AT 32" O.C.
#4 BAR CONT. IN BOND BEAM

7 COLUMN FOOTING
A-5.1
SCALE 3/4" = 1'-0"

ISSUED FOR CONSTRUCTION. DATE:

REVISIONS

Number	Date:	Remarks:	Number	Date:	Remarks:
X	00-00-00	N/A			

CONSULTANTS

CARTER WATKINS ASSOCIATES ARCHITECTS, INC.
POST OFFICE BOX 1004
137 EAST WASHINGTON STREET
MONROE, GEORGIA 30655
Fax: 770/267-1064
email@carterwatkins.com www.carterwatkins.com

SEAL
BENJAMIN MERCER CARTER
CERTIFICATE NO. 003877

BARTOW COUNTY
FIRE STATION NO. 9
Battalion Headquarters

SHEET TITLE:
ROOF FRAMING PLAN

PRINTED: 00/00/00

path: \\server\shared cad\....

NUMBER:
A-5.1

A1	FLUORESCENT LIGHT FIXTURE LITHONIA-2SP-G-3-32-_-A19-120-GEB10IS-DUAL BALLASTS-INPUT-88 WATTS
A2	FLUORESCENT LIGHT FIXTURE LITHONIA-2SP-G-2-32-_-A19-120-GEB10IS INPUT WATTS=59 WATTS
B	FLUORESCENT LIGHT FIXTURE LITHONIA-2SP-G-3-U31-_-A19-120-GEB10IS INPUT WATTS=88 WATTS
C	FLUORESCENT LIGHT FIXTURE LITHONIA-2SP-G-2-U31-_-A19-120-GEB10IS INPUT WATTS=59 WATTS
D	FLUORESCENT LIGHT FIXTURE LITHONIA-2M-4-U31-_-A12-120GEB10RS NOTE*: PROVIDE NIGHT LIGHT FEATURE AS SHOWN ON PLAN INPUT WATTS=113 WATTS
E	4 FT. SURFACE MOUNTED FLUORESCENT WITH LENS - LITHONIA-AW-2-32-_-120-GEB10RS. INPUT WATTS=59 WATTS
F	OUTDOOR LED WALL LIGHT LITHONIA OLLWD - DDB. DARK BRONZE LED WALL CYLINDER DOWNLIGHT INPUT WATTS=9 WATTS
G	UNIVERSAL MOUNT LED COMBINATION EMERGENCY & EXIT SIGN - LITHONIA-ECR LED HO M6 RED, HIGH OUTPUT, 120/277 VOLTS, 3.2 INPUT WATTS
H	FLUORESCENT LIGHT FIXTURE - SURFACE MOUNTED LITHONIA-2M-2-U31-_-A12-120-GEB10RS INPUT WATTS=59 WATTS
H1	FLUORESCENT LIGHT FIXTURE - SURFACE MOUNTED LITHONIA-2M-3-32-_-A19-120-GEB10RS INPUT WATTS=88 WATTS
J	D-SERIES SIZE 2 LED WALL PACK - DARK BRONZE LITHONIA - DSXW2LED 30C 1000 40K-TYPE-T4M- 120V-SF-DDBXD INPUT WATTS=109 WATTS

NOTE: ALL EXTERIOR LIGHTING TO BE ON PHOTO CELL - DUSK TO DAWN. PROVIDE MANUAL OVERRIDE SWITCH IN ELECTRICAL ROOM.

K	FLUORESCENT WET LOCATION FIXTURE LITHONIA-2WRT-G-2-U31-_-A12125-120-GEB10IS INPUT WATTS=59 WATTS
L	FLUORESCENT WET LOCATION FIXTURE LITHONIA-2WRT-G-3-32-_-A12125-120-GEB10IS INPUT WATTS=88 WATTS
M	OUTDOOR WALL LED LIGHT VISA - SEQUENCE 4 FT. LED FIXTURE. #OW5202-LCW650(MVOLT)-BMAT (DIMMABLE) INPUT WATTS=19 WATTS
	LITHOINA-EU2 LEDM12, 120 VOLTS, 1.8 INPUT WATTS.
S	SMOKE DETECTOR
M	CARBON MONOXIDE DETECTOR
R	RATE OF RISE DETECTOR
F	FIXED TEMP. DETECTOR

NOTE: SMOKE DETECTORS AND ALARM SYSTEM

SMOKE DETECTORS SHALL BE LOCATED IN ALL COMMON SPACES, SLEEPING ROOMS, AND CORRIDORS. DETECTORS IN CORRIDORS SHALL BE 15' FROM END OF CORRIDOR AND SPACED 30' THEREAFTER. SMOKE DETECTORS IN SLEEPING ROOMS SHALL BE POWERED BY ELECTRICAL SYSTEM AND HAVE A 1 1/2" HR. EMERGENCY POWER SOURCE. DETECTORS SHALL INITIATE FIRE ALARM THAT IS AUDIBLE IN SLEEPING AREAS. FIRE ALARM SHOP DRAWINGS, CANDELA RATINGS, AND DEVICE CUT SHEETS SHALL BE SUBMITTED TO THE ARCHITECT'S OFFICE FOR REVIEW AND APPROVAL PRIOR TO INSTALLATION.

NOTE: CEILING TILES IN RESTROOMS AND RESTROOMS WITH SHOWERS TO BE CLEAN ROOM.

NOTES

CONTRCTOR SHALL PROVIDE ELECTRICAL CONNECTION FOR OWNER SUPPLIED ENCODER TO TURN-ON LIGHTS IN FIRE STATION, OPEN OVERHEAD DOORS, TURN-OFF STOVE, CONTROL TRAFIC SIGNAL ON HWY-?, AND CONTROL PA SYSTEM.

1 ALL LIGHT FIXTURES IN THE ROOM TO BE DUAL SWITCHED. ONE SWITCH TO CONTROL TWO OUTSIDE LAMPS AND OTHER SWITCH TO CONTROL HALF OF THE OUTSIDE LAMPS. PROVIDE 2 BALLASTS. (ENERGY CODE REQUIREMENT)

ALL LIGHT FIXTURES EXCEPT SLEEPING AREAS, ELECTRICAL ROOM, AND EMERGENCY LIGHTS SHALL BE OPERATED WITH TIMER AND LIGHTING CONTACTOR WITH OVERIDIE SWITCH OR MOTION DETECTOR IN THE ROOM. IF MOTION DETECTOR IS PROVIDED THAN DUAL SWITCHING IS NOT REQUIRED. (ENERGY CODE REQUIREMENT)

NOTE: APPARATUS BAY CEILING TO HAVE 1X4 PVC TRIM ON EDGES AND AT 4'-0" O.C. EACH WAY.

NOTE: PROVIDE SMOKE DETECTORS IN ATTIC. PROVIDE 4 EQUALLY SPACED OVER APPARATUS BAY AND 3 EQUALLY SPACED OVER OFFICE AREA.

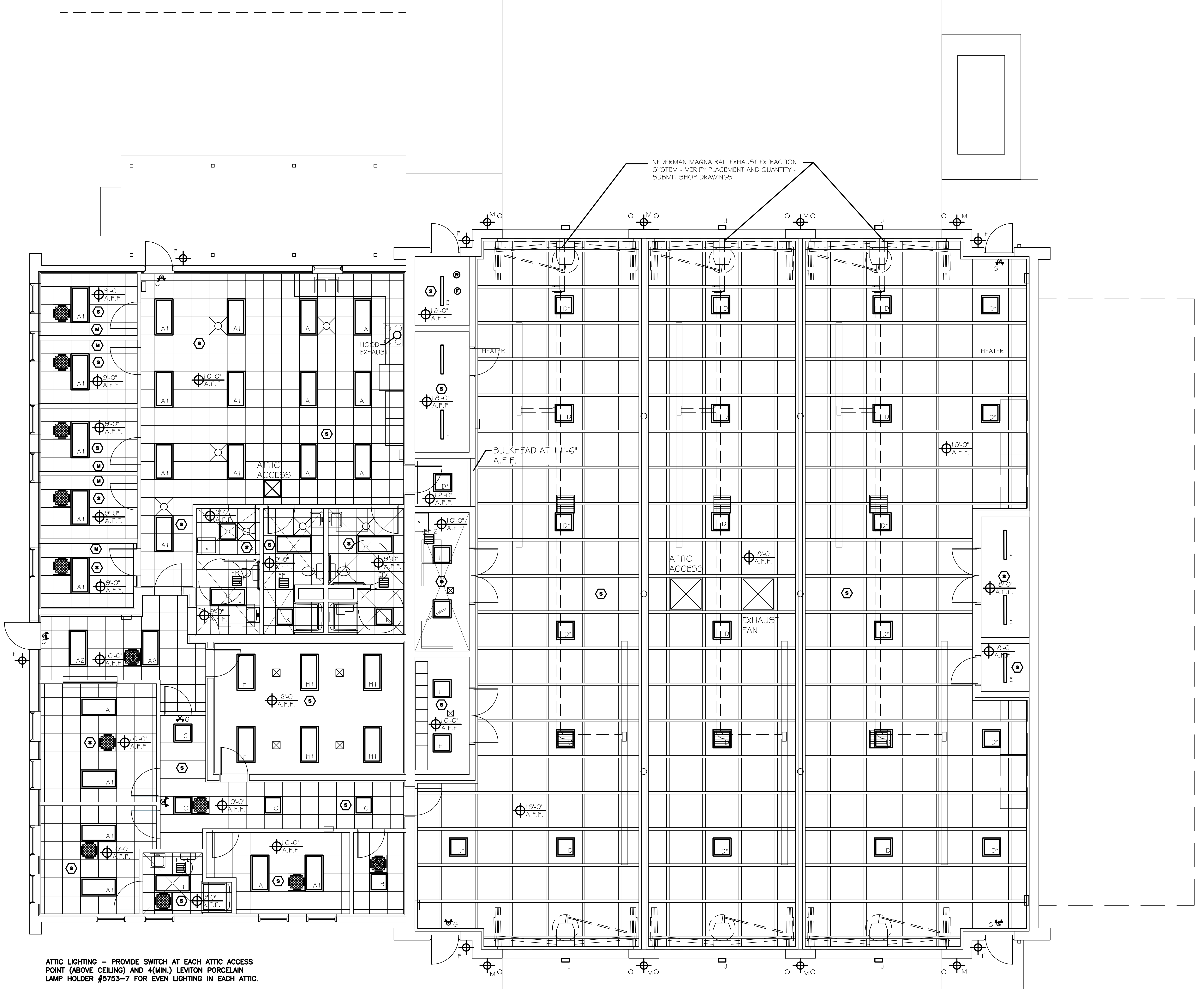
NEDERMAN MAGNA RAIL EXHAUST EXTRACTION SYSTEM - VERIFY PLACEMENT AND QUANTITY - SUBMIT SHOP DRAWINGS
HOOD EXHAUST
ATTIC ACCESS
BULKHEAD AT 11'-6" A.F.F.
HEATER
HEATER
ATTIC ACCESS
EXHAUST FAN
9'-0" A.F.F.
12'-0" A.F.F.
18'-0" A.F.F.
A1
A2
B
C
D
D*
E
F
G
H
H1
J
K
L
M

ATTIC LIGHTING - PROVIDE SWITCH AT EACH ATTIC ACCESS POINT (ABOVE CEILING) AND 4(MIN.) LEVITON PORCELAIN LAMP HOLDER #5753-7 FOR EVEN LIGHTING IN EACH ATTIC.

PROVIDE 5/8" TYPE X GYPSUM BOARD ON THE BOTTOOM SIDE OF ALL TRUSSES - TYPICAL ALL SPACES EXCEPT APPARATUS ROOM.

NOTE: APPARATUS BAY BULKHEAD (AT 11'-6" A.F.F.) TO BE 20 GA. 6" METAL STUDS WITH GREEN BOARD ON EACH SIDE. PROVIDE "J" MOLDS AT BLOCK / HEADER.

LOWERED CEILING TO BE 20 GA. 8" CHANNELS AT 16" O.C. WITH GREEN BOARD AND 1X4 TRIM.

NOTE: CONTRACTOR TO VERIFY ALL INSTALLATION CONDITIONS AND REQUIRED SEQUENCING AND CLEARANCES FOR DOOR, EXHAUST SYSTEM AND LIGHTING INSTALLATION PRIOR TO PROCEEDING WITH WORK.

1
A-6.1
REFLECTED CEILING PLAN
SCALE 3/16" = 1'-0"

N

ISSUED FOR CONSTRUCTION. DATE: 05 / 07 / 14

REVISIONS

Number	Date:	Remarks:	Number	Date:	Remarks:
X	00-00-00	N/A			

CONSULTANTS

CARTER WATKINS ASSOCIATES ARCHITECTS, INC.
POST OFFICE BOX 1004
137 EAST WASHINGTON STREET
MONROE, GEORGIA 30655
Fax: 770/267-1064
email@carterwatkins.com www.carterwatkins.com

SEAL
BENJAMIN MERCER CARTER

BARTOW COUNTY
FIRE STATION NO. 9
Battalion Headquarters

SHEET TITLE:
REFLECTED CEILING PLAN

PRINTED: 00/00/00

path: \\server\shared cad\....

NUMBER:
A-6.1

ROOM FINISH SCHEDULE

ROOM NO.	ROOM NAME	FLOOR	BASE	WALLS	FINISH	CEILINGS	HEIGHT	REMARKS
101	LOBBY	LVT	6" WOOD	GYP. BD./ WD. WAINSCOT	PAINT	ACT	10'	
102	HC PUBLIC RESTROOM	CERAMIC TILE	CER. TILE	GYP. BD. / CER. TILE	EPOXY PAINT	ACT	9'	
103	TRAINING/CONFERENCE	LVT	6" WOOD	GYP. BD./ WD. WAINSCOT	PAINT	GYP. BOARD	12'	
104	OFFICE	LVT	6" WOOD	GYP. BD./ WD. WAINSCOT	PAINT	ACT	10'	
105	BATTALION CHIEF	LVT	6" WOOD	GYP. BD./ WD. WAINSCOT	EPOXY PAINT	ACT	10'	
106	STAFF RESTROOM	CERAMIC TILE	CER. TILE	GYP. BD. / CER. TILE	PAINT	ACT	9'	
107	CAPTAIN	LVT	6" WOOD	GYP. BD./ WD. WAINSCOT	PAINT	ACT	10'	
108	SERVER	LVT	6" WOOD	GYP. BD./ WD. WAINSCOT	PAINT	ACT	9'	
109	CORRIDOR	LVT	6" WOOD	GYP. BD./ WD. WAINSCOT	PAINT	ACT	10'	
110	APPARATUS ROOM	COATED CONC.	QUARRY TILE	EXPOSED BLOCK.	EPOXY PAINT	GREEN BD.	18'	1 HR. WALLS UP TO ROOF
111	LOCKERS	COATED CONC.	QUARRY TILE	EXPOSED BLOCK.	EPOXY PAINT	GREEN BD.	10'	CLG. IS 16 GA. 8" CHANNELS @ 16" O.C.
112	LAUNDRY	COATED CONC.	QUARRY TILE	EXPOSED BLOCK.	EPOXY PAINT	GREEN BD.	10'	CLG. IS 16 GA. 8" CHANNELS @ 16" O.C.
113	MECHANICAL	COATED CONC.	QUARRY TILE	EXPOSED BLOCK.	EPOXY PAINT	EXPOSED	18'	
114	SPRINKLER	COATED CONC.	QUARRY TILE	EXPOSED BLOCK.	EPOXY PAINT	EXPOSED	18'	
115	STORAGE	COATED CONC.	QUARRY TILE	EXPOSED BLOCK.	EPOXY PAINT	GREEN BD.	10'	CLG. IS 16 GA. 8" CHANNELS @ 16" O.C.
116	KITCHEN	LVT	6" WOOD	GYP. BD./ WD. WAINSCOT	PAINT	ACT	10'	
117	DAYROOM	LVT	6" WOOD	GYP. BD./ WD. WAINSCOT	PAINT	ACT	10'	
118	HC RESTROOM	CERAMIC TILE	CER. TILE	GYP. BD. / CER. TILE	EPOXY PAINT	ACT	9'	
119	RESTROOM	CERAMIC TILE	CER. TILE	GYP. BD. / CER. TILE	EPOXY PAINT	ACT	9'	
120	JANITOR	CERAMIC TILE	CER. TILE	GYP. BD.	EPOXY PAINT	ACT	9'	
121	BUNK ROOM	LVT	6" WOOD	GYP. BD./ WD. WAINSCOT	PAINT	ACT	9'	
122	BUNK ROOM	LVT	6" WOOD	GYP. BD./ WD. WAINSCOT	PAINT	ACT	9'	
123	BUNK ROOM	LVT	6" WOOD	GYP. BD./ WD. WAINSCOT	PAINT	ACT	9'	
124	BUNK ROOM	LVT	6" WOOD	GYP. BD./ WD. WAINSCOT	PAINT	ACT	9'	
125	BUNK ROOM	LVT	6" WOOD	GYP. BD./ WD. WAINSCOT	PAINT	ACT	9'	
126	ELECTRICAL	COATED CONC.	4" RUBBER	EXPOSED BLOCK.	EPOXY PAINT	RATED GYP. BD	18'	UNDERSIDE OF TRUSSES

NOTE: ALL CONCRETE FLOORS ARE TO BE SMOOTH FINISH, POLISHED AND COATED WITH CERTI-SHINE BY VEXCON CHEMICALS, INC.
FINISH TO BE SILVER LEVEL, SATIN FINISH. PROVIDE CERTI-SHINE FSR OR EQUAL ON ALL FLOORS. ALLOW FOR THREE COLORS TO BE SELECTED.

DOOR SCHEDULE

DOOR NO.	DOOR SIZE	DOOR TYPE	DOOR	DOOR FINISH	FRAME	FRAME FINSH	LABEL	HARDWARE SET	REMARKS
101A	3° X 8'-0" X 1¾"	A	ALUM.	FACTORY	ALUM.	FACTORY		CLOSER	PANIC HARDWARE
101B	3° X 7'-0" X 1¾"	C	WOOD	STAIN	H.M.	PAINT			
102A	3° X 7'-0" X 1¾"	D	WOOD	STAIN	H.M.	PAINT		CLOSER	
103A	3° X 7'-0" X 1¾"	C	WOOD	STAIN	H.M.	PAINT		CLOSER	
103B	3° X 7'-0" X 1¾"	C	WOOD	STAIN	H.M.	PAINT		CLOSER	
104A	3° X 7'-0" X 1¾"	C	WOOD	STAIN	H.M.	PAINT			
105A	3° X 7'-0" X 1¾"	D	WOOD	STAIN	H.M.	PAINT			
106A	3° X 7'-0" X 1¾"	D	WOOD	STAIN	H.M.	PAINT			
107A	3° X 7'-0" X 1¾"	D	WOOD	STAIN	H.M.	PAINT			
108A	3° X 7'-0" X 1¾"	D	WOOD	STAIN	H.M.	PAINT			
109A	3° X 7'-0" X 1¾"	C	WOOD	STAIN	H.M.	PAINT		CLOSER	
109B	3° X 7'-0" X 1¾"	B	H.M.	PAINT	H.M.	PAINT	C-LABEL 45 MIN.	CLOSER	
110A	3° X 8'-0" X 1¾"	A	ALUM.	FACTORY	ALUM.	FACTORY		CLOSER	PANIC HARDWARE
110B	3° X 8'-0" X 1¾"	A	ALUM.	FACTORY	ALUM.	FACTORY		CLOSER	PANIC HARDWARE
110C	3° X 8'-0" X 1¾"	A	ALUM.	FACTORY	ALUM.	FACTORY		CLOSER	PANIC HARDWARE
110D	16'-0" X 14'-0"	E	STEEL	FACTORY	STEEL	FACTORY			2 OPENERS PER DOOR
110E	16'-0" X 14'-0"	E	STEEL	FACTORY	STEEL	FACTORY			2 OPENERS PER DOOR
110F	16'-0" X 14'-0"	E	STEEL	FACTORY	STEEL	FACTORY			2 OPENERS PER DOOR
110G	16'-0" X 14'-0"	E	STEEL	FACTORY	STEEL	FACTORY			2 OPENERS PER DOOR
110H	16'-0" X 14'-0"	E	STEEL	FACTORY	STEEL	FACTORY			2 OPENERS PER DOOR
110I	16'-0" X 14'-0"	E	STEEL	FACTORY	STEEL	FACTORY			2 OPENERS PER DOOR
111A	3° X 7'-0" X 1¾" (PAIR)	B	H.M.	PAINT	H.M.	PAINT			
112A	3° X 7'-0" X 1¾" (PAIR)	B	H.M.	PAINT	H.M.	PAINT			
113A	3° X 7'-0" X 1¾"	B	H.M.	PAINT	H.M.	PAINT			
114A	3° X 7'-0" X 1¾"	B	H.M.	PAINT	H.M.	PAINT			
115A	3° X 7'-0" X 1¾" (PAIR)	B	H.M.	PAINT	H.M.	PAINT			
116A	3° X 7'-0" X 1¾"	B	H.M.	PAINT	H.M.	PAINT	C-LABEL 45 MIN.	CLOSER	
117A	3° X 8'-0" X 1¾"	A	ALUM.	FACTORY	ALUM.	FACTORY		CLOSER	PANIC HARDWARE
118A	3° X 7'-0" X 1¾"	D	WOOD	STAIN	H.M.	PAINT		CLOSER	
119A	3° X 7'-0" X 1¾"	D	WOOD	STAIN	H.M.	PAINT		CLOSER	
120A	3° X 7'-0" X 1¾"	D	WOOD	STAIN	H.M.	PAINT		CLOSER	
121A	3° X 7'-0" X 1¾"	D	WOOD	STAIN	H.M.	PAINT			
122A	3° X 7'-0" X 1¾"	D	WOOD	STAIN	H.M.	PAINT			
123A	3° X 7'-0" X 1¾"	D	WOOD	STAIN	H.M.	PAINT			
124A	3° X 7'-0" X 1¾"	D	WOOD	STAIN	H.M.	PAINT			
125A	3° X 7'-0" X 1¾"	D	WOOD	STAIN	H.M.	PAINT			
126A	3° X 8'-0" X 1¾"	B	H.M.	PAINT	H.M.	PAINT		CLOSER	APPLY MOLDING TO RESEMBLE DOOR A

ALUMINUM STOREFRONT DOORS AND FRAMES:

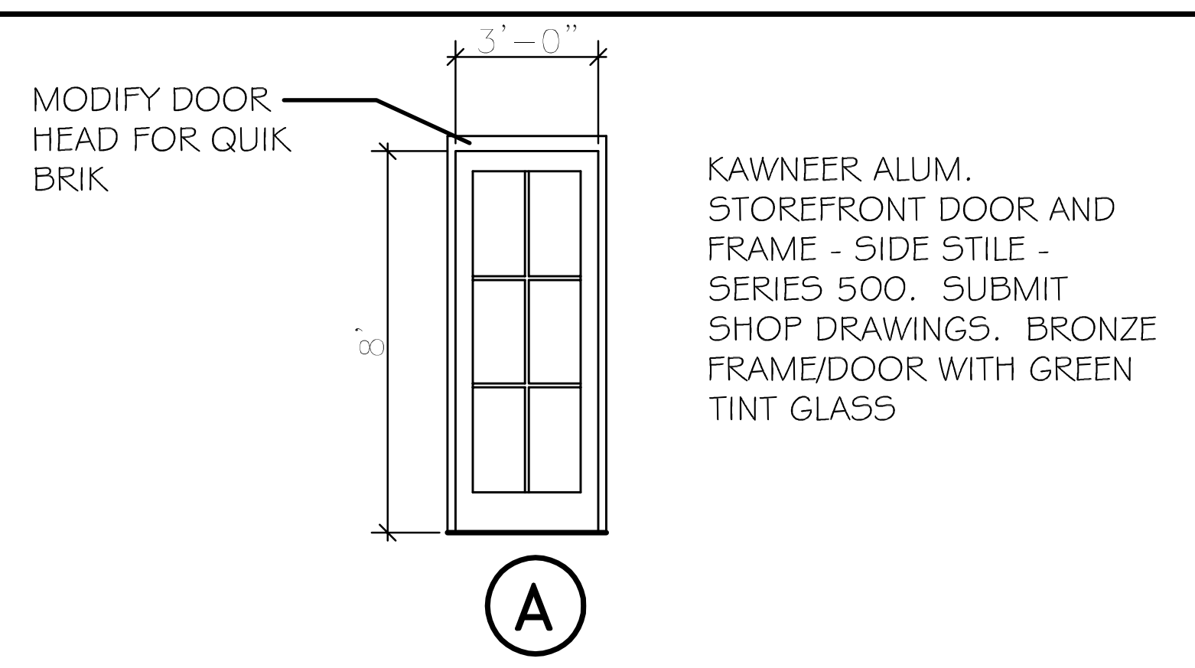

KAWNEER ALUM. STOREFRONT DOOR AND FRAME - SIDE STILE - SERIES 500. SUBMIT SHOP DRAWINGS. BRONZE FRAME/DOOR WITH GREEN TINT GLASS

HOLLOW METAL DOORS AND FRAMES:

NOTE: MODIFY DOOR FRAME FOR WALL TYPES. PROVIDE 4" TALL DOOR HEAD AT CMU / QUIK BRICK. SEE PLAN FOR LOCATIONS

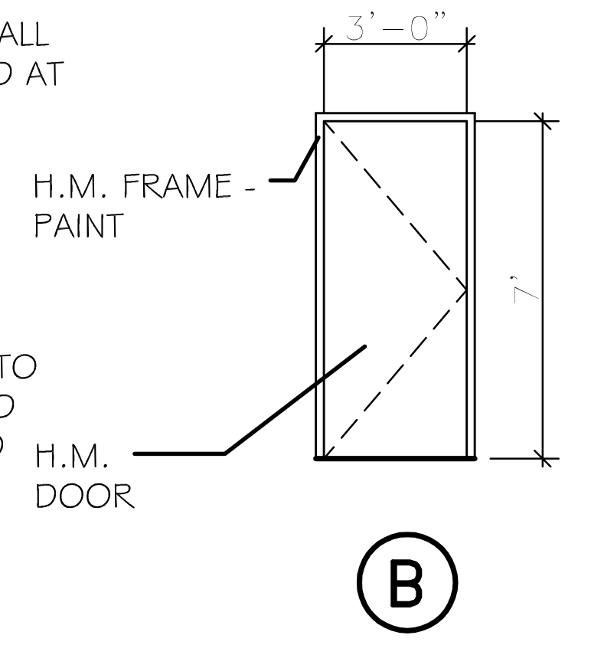

NOTE: DOOR 126A (EXTERIOR) IS TO BE 8'-0" TALL.

NOTE: ALL INTERIOR WOOD DOORS TO BE STAIN-GRADE QUARTER SAWN RED OAK BOOK-MATCHED VENEER - FIELD FINISHED.

NOTE: INTERIOR TRIM - ALL INTERIOR TRIM TO BE STAIN-GRADE PLAIN SAWN RED OAK.

ALL INSIDE FACES OF WINDOWS AND INTERIOR WINDOWS TO HAVE 1X4 TRIM AT JAMBS, 1X6 HEAD TRIM (EXTEND 1" PAST JAMB EACH SIDE) SILL AND APRON - ALL WINDOW TRIM TO BE STAIN-GRADE

ALL INTERIOR DOORS TO HAVE SAME JAMB AND HEAD TRIM AS WINDOWS.

ALL ROOMS WITH WOOD BASE TO BE 1X6 STAIN GRADE WITH ¾" SHOE MOLD - TYP.

WAINSCOT TO BE 1X4 STAIN-GRADE.

WOOD DOORS AND HOLLOW METAL FRAMES:

NOTE: MODIFY DOOR FRAME FOR WALL TYPES. PROVIDE 4" TALL DOOR HEAD AT CMU / QUIK BRICK. SEE PLAN FOR LOCATIONS

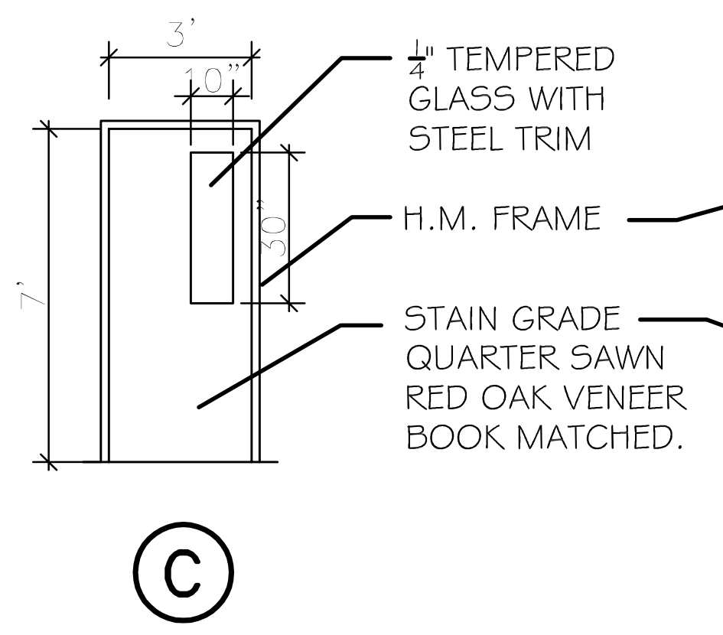
3'
10"
30"
7'
¼" TEMPERED GLASS WITH STEEL TRIM
H.M. FRAME
STAIN GRADE QUARTER SAWN RED OAK VENEER BOOK MATCHED.
C

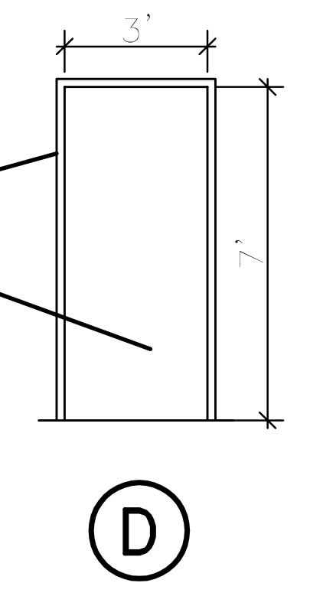

ALUMINUM OVERHEAD DOOR

Folding doors to be Four fold doors by Door Engineering and manufacturing (or equal). 14'-0" wide x 16'-0" arched top glass doors. Frame colors to be red. Provide all required accessories. Submit shop drawings. Verify mounting requirements and clearances prior to ordering. Ensure all other equipment in Apparatus bay is installed to allow door operation. Provide weatherstripping on all sides.

Provide door operators for each door. Provide power in apparatus bay room ceiling for each operator and switches (one per operator/bank of four) route to doors (switches to be at each exterior and adj. interior corridor entrances. Verify Final location with Owner. Provide 12 total openers - 2 per door operator.

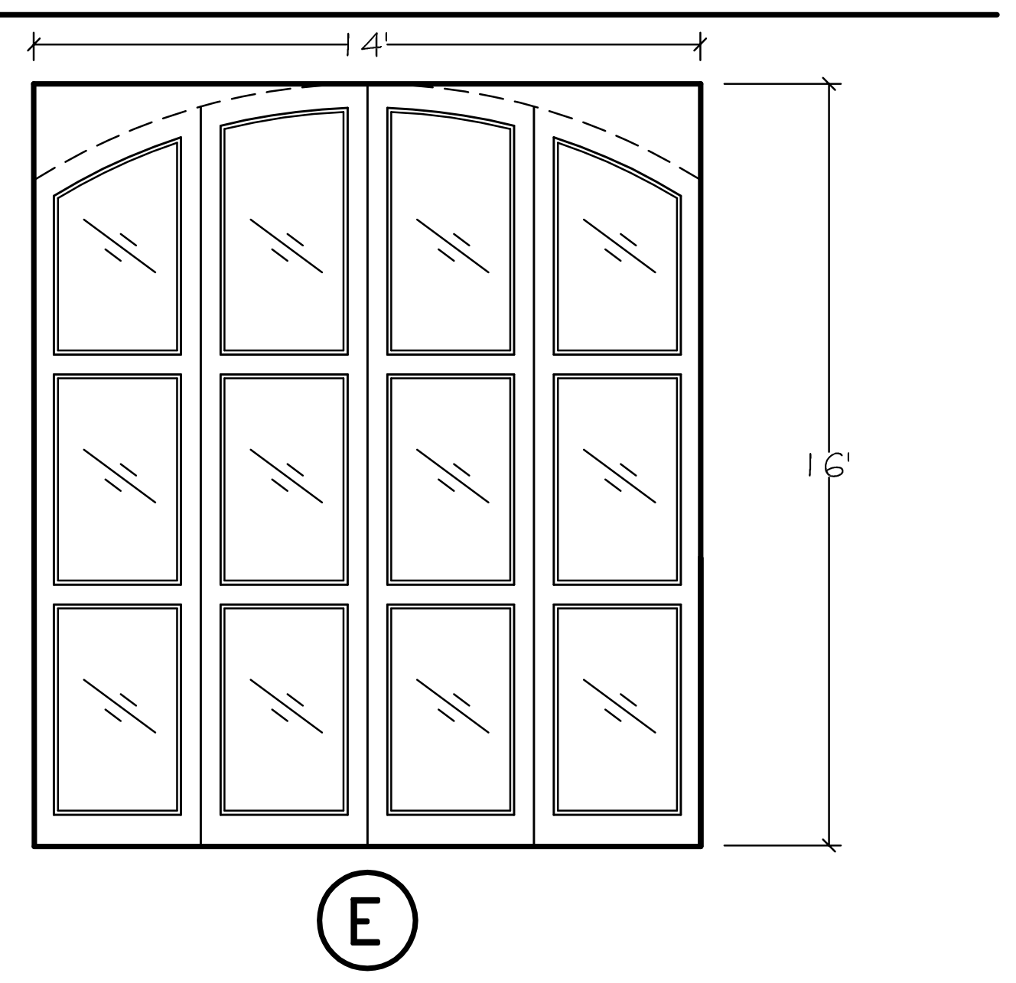

FINISH NOTES:

1. FURR AROUND ANY AND ALL EXPOSED METAL FRAMES, COLUMNS, BRACES, ETC. WITH GYP. BD. AND FINISH TO MATCH ADJACENT AREAS. MAINTAIN FIRE RATINGS, ETC. WHERE REQUIRED.
2. REFER TO ELEVATIONS AND SPECIFICATIONS FOR EXTERIOR FINISHES.
3. PAINT ALL EXTERIOR HOODS, FLUES, PIPES, VENTS, ETC. TO MATCH ADJACENT FINISHES.
4. PROVIDE EMERGENCY LIGHTING AND AUDIBLE AND VISUAL DEVICES IN ALL RESTROOMS, DAY ROOM/ COMMUNITY ROOMS/ MEETING ROOMS, CORRIDORS, STORAGE, OFFICES, BUNK ROOM, AND OTHER NORMALLY OCCUPIED SPACES.
5. PROVIDE FIRE ALARM SYSTEM WITH MANUAL PULL STATIONS AT ALL EXITS.
6. PROVIDE R-30 BATT INSULATION ABOVE ALL CEILINGS AT UNDERSIDE OF TRUSSES. PROVIDE 1 1/2" RIGID INSULATION AT FURRED BLOCK WALLS.
7. AT ALL RATED WALLS AND FLOOR PENETRATIONS, PROVIDE RATED OUTLET BOXES, SWITCHES, ETC. TO MAINTAIN RATINGS.
8. ALL GYPSUM BOARD IS TO BE PRIMED AND PAINTED WITH TWO COATS EGGSHELL ACRYLIC DURON PAINT.
9. ALL CONCRETE BLOCK TO HAVE BLOCK FILLER APPLIED AND PRIMER AND PAINT.
10. REFER TO PROJECT MANUAL AND SPECIFICATIONS FOR SPECIFIC MATERIALS FINISHES, ETC.

GENERAL NOTES:

1. ALL WOOD DOORS TO BE STAINED AND URETHANED - COLOR TO BE SELECTED. PROVIDE SEMI-GLOSS FINISH -
2. ALL METAL GLASS FRAMES IN DOORS TO BE PAINTED.
3. VERIFY ALL DOOR JAMB THICKNESSES AND INSTALLATION CONDITIONS.
4. COORDINATE RATED DOOR HARDWARE AS REQUIRED. PROVIDE AT ALL RATED WALLS - TYPICAL.
5. SUBMIT SHOP DRAWINGS ON ALL DOORS AND FRAMES.
6. ANY DOOR OR OPENING OMITTED FROM SCHEDULE SHALL HAVE FINISH AND HARDWARE TO MATCH SIMILAR DOORS.
7. ALL GYPSUM BOARD IS TO BE 5/8" THICK AND PRIME AND PAINT. PROVIDE 5/8" TYPE "X" OR FIRE CODE "C" GYP. BOARD AT ALL RATED WALLS AND PRIME AND PAINT.
8. PROVIDE ADEQUATE BLOCKING IN WALLS FOR WALL HUNG EQUIPMENT FIXTURES, COUNTERTOPS, ETC.

ISSUED FOR CONSTRUCTION. DATE:

REVISIONS

Number	Date:	Remarks:	Number	Date:	Remarks:
X	00-00-00	N/A			

CONSULTANTS

CARTER WATKINS ASSOCIATES ARCHITECTS, INC.
POST OFFICE BOX 1004
137 EAST WASHINGTON STREET
MONROE, GEORGIA 30655
Fax: 770/267-1064
email@carterwatkins.com www.carterwatkins.com

SEAL
BENJAMIN MERCER CARTER

BARTOW COUNTY FIRE
STATION NO. 9
Battalion Headquarters

SHEET TITLE: ROOM FINISH & DOOR SCHEDULES

PRINTED:

NUMBER: A-7.1

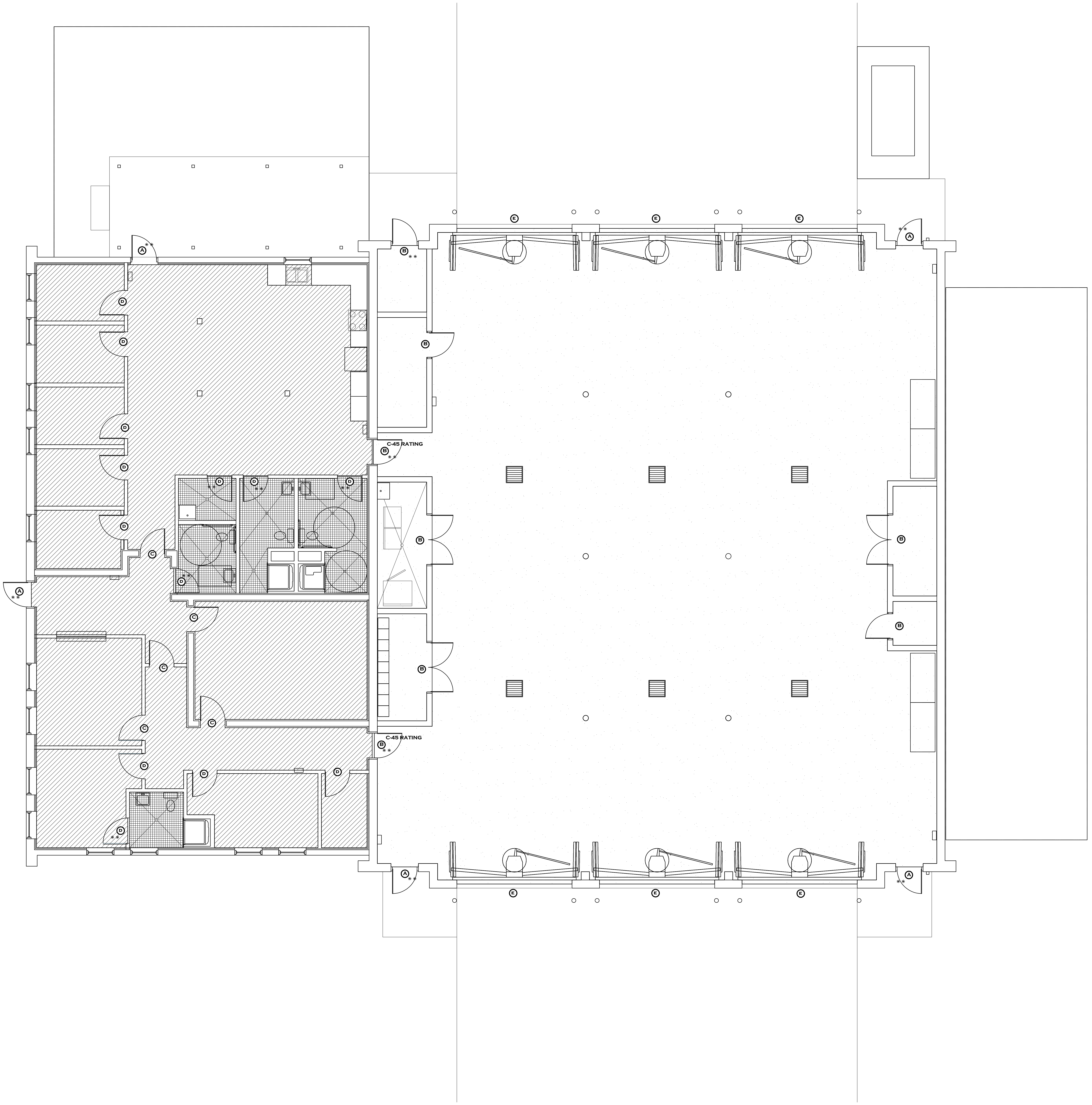

1

A-7.2

ROOM FINISH AND
DOOR SCHEDULE PLAN

SCALE 3/16" = 1'-0"

LEGEND

░	EPOXY PAINT ON CONCRETE
▦	CERAMIC TILE - SEE SPECIFICATION
▨	LVT - SEE SPECIFICATION
Ⓐ	DOOR TYPE "A" ALUM. STOREFRONT, FULL GLASS
Ⓑ	DOOR TYPE "B" H.M. FRAME & DOOR (FLUSH)
Ⓒ	DOOR TYPE "C" H.M. FRAME, WOOD DOOR W/ 10"X30" WINDOW
Ⓓ	DOOR TYPE "D" H.M. FRAME, WOOD DOOR (SOLID - FLUSH)
Ⓔ	DOOR TYPE "E" FOUR FOLD DOOR - SEE A-7.1 FOR NOTE
* *	DOOR CLOSER

REVISIONS

Number	Date:	Remarks:	Number	Date:	Remarks:
X	00-00-00	N/A			

CONSULTANTS

CARTER WATKINS ASSOCIATES
ARCHITECTS, INC.
POST OFFICE BOX 1004
137 EAST WASHINGTON STREET
MONROE, GEORGIA 30655
Fax: 770/267-1064
email@carterwatkins.com www.carterwatkins.com

SEAL

BENJAMIN MERCER CARTER

BARTOW COUNTY
FIRE STATION NO. 9
Battalion Headquarters

SHEET TITLE:
ROOM FINISH AND
DOOR SCHEDULE PLAN

PRINTED: 00/00/00

path: \\server\shared cad\....

NUMBER:
A-7.2

ISSUED FOR CONSTRUCTION. DATE:

LEGEND

⊠	EXHAUST AIR
FD ◀	FIRE DAMPER WITH ACCESS PANEL.
SA	SUPPLY AIR ⊠
RA	RETURN AIR ◪
Ⓣ	THERMOSTAT (PROGRAMMABLE)
SD	SMOKE DETECTOR IN SUPPLY AIR DUCT AS PER GA. AMENDMENTS606.2.1
A–8–100	CFM NECK SIZE AIR DISTRIBUTION DEVICE SEE SCHEDULE.
Ø	SPIN IN FITTING WITH MANUAL VOLUME DAMPER
MVD	MANUAL VOLUME DAMPER

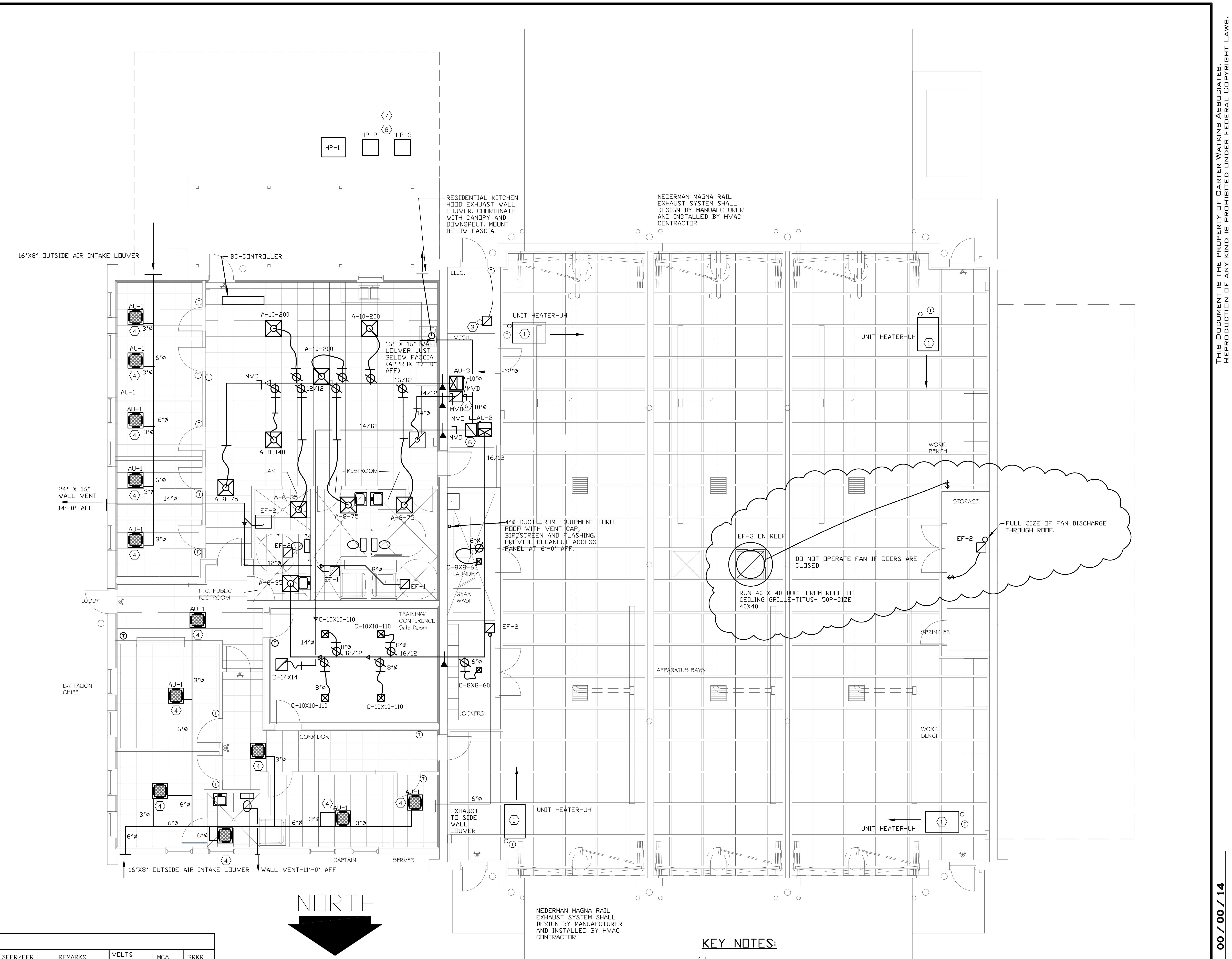
HP-1
HP-2
HP-3
7
8
16"X8" OUTSIDE AIR INTAKE LOUVER
BC-CONTROLLER
RESIDENTIAL KITCHEN HOOD EXHAUST WALL LOUVER. COORDINATE WITH CANOPY AND DOWNSPOUT. MOUNT BELOW FASCIA.
NEDERMAN MAGNA RAIL EXHAUST SYSTEM SHALL DESIGN BY MANUAFCTURER AND INSTALLED BY HVAC CONTRACTOR
AU-1
A-10-200
MVD
12/12
16/12
16" X 16" WALL LOUVER JUST BELOW FASCIA (APPROX. 17'-0" AFF)
ELEC.
MECH.
AU-3
AU-2
12"Ø
10"Ø
14/12
14"Ø
14/12
UNIT HEATER-UH
A-8-140
JAN.
RESTROOM
A-8-75
A-6-35
EF-2
EF-1
24" X 16" WALL VENT 14'-0" AFF
4"Ø DUCT FROM EQUIPMENT THRU ROOF WITH VENT CAP, BIRDSCREEN AND FLASHING. PROVIDE CLEANOUT ACCESS PANEL AT 6'-0" AFF.
C-8X8-60
LAUNDRY
GEAR WASH
H.C. PUBLIC RESTROOM
LOBBY
C-10X10-110
TRAINING/ CONFERENCE Safe Room
D-14X14
8"Ø
6"Ø
3"Ø
EF-3 ON ROOF
DO NOT OPERATE FAN IF DOORS ARE CLOSED.
RUN 40 X 40 DUCT FROM ROOF TO CEILING GRILLE-TITUS- 50P-SIZE 40X40
STORAGE
FULL SIZE OF FAN DISCHARGE THROUGH ROOF.
WORK BENCH
SPRINKLER
APPARATUS BAYS
BATTALION CHIEF
CORRIDOR
LOCKERS
EXHAUST TO SIDE WALL LOUVER
CAPTAIN
SERVER
16"X8" OUTSIDE AIR INTAKE LOUVER
WALL VENT-11'-0" AFF
NORTH

SIMULTANEOUS HEATING AND COOLING HEAT PUMP SCHEDULE

MARK	COOLING	HEATING	MANUFACTURER	MODEL	O.A.	COP @17°F	SEER/EER	VOLTS	MCA	BRKR
	TOTAL	@ 47° DB								
AU-1	8,000	9,000	MITSUBISHI	PLFY-P08NCMU-E	17			208/1/60	0.,23	15/2
HP-1	72,000	80,000	MITSUBISHI	PUHY-P72YKMU-A		3.83	13	208/3/60	25	30/3

BC-CONTROLLER, WALL THERMOSTAT

AIR DISTRIBUTION SCHEDULE

MARK	DESCRIPTION	KRUEGER MODEL	PANEL SIZE	REMARKS
A	TITUS "PAS" PERFORATED SUPPLY AIR CEILING DIFFUSER.	6604	24X24	1,2,3
B	TITUS "50P" EGGCRATE 1/2"X1/2"X1/2" GRID RETURN AIR GRILLE.	ECG5	24X24	1
C	TITUS "272RL" SUPPLY AIR REGISTER. SEE FLOOR PLAN FOR SIZE.	880-V-OBD	SEE FLOOR PLAN	1,2,3
D	TITUS "25R" RETURN AIR GRILLE. SEE FLOOR PLAN FOR SIZE.	S80H	SEE FLOOR PLAN	1

1. STEEL. FINISH AND BORDER SHALL MATCH CEILING. SEE ARCHITECT DRAWING FOR THE TYPE OF CEILING.
2. MANUAL VOLUME DAMPER.
3. FACTORY INSULATED DIFFUSER AT UNCONDITIONED AREA OR NO RETURN AIR PLENUM.

GAS FIRED UNIT HEATER SCHEDULE

MARK	INPUT	OUTPUT	MOUTHING	THROW	MANUFACTURER	MODEL#	VOLTS	AMPS	WT	REMARKS
	MBH	MBH	HIGHT	FT.						
UH	175	159	NOTE-1	74	REZNOR	UEAS180	115	6.3	270#	1,2,3

1. COORDINATE W/OWNER.
2. COMBUSTION AND VENT KIT, FAN GUARD, GAS SHUT-OFF VALVE.
3. SINGLE STAGE THERMOSTAT, 24 VOLT CONTROL TRANSFORMER, 115 VOLTS, DISCONNECT

FAN SCHEDULE

MARK	CFM	EXP.SP	RPM	T.S.	SONES	H.P.	MFG.	VOLTS	MODEL #	ROOF OPENING	WEIGHT	REMARKS
EF-1	150	0.25	770	1360	1.6	1/12	PENN	115/1	Z8S	–	–	1,2
EF-2	75	0.25	717	1173	1.3	1/18	PENN	115/1	ZJ1	–	–	1,2
	–	–	–	–		–	–		–	–	–	–
EF-3	18000	0.5	667	6494	29	5	PENN	208/3	DX36B	36" X 36"	420#	3

1. SPEED CONTROLLER.
2. CEILING MOUNTED WITH BACKDRAFT DAMPER.
3. BELT DRIVE, ROOF CURB, DISCONNECT SWITCH, BIRD SCREEN,

SPLIT SYSTEM HEAT PUMP A/C UNIT SCHEDULE

MARK	COOLING CAPACITY		HEATING CAPACITY		FAN DATA			MANUFACTURER	MODEL	O.A.	COP @17°F	SEER/EER	REMARKS	VOLTS	MCA	BRKR
	TOTAL	SENSIBLE	@ 17° DB	AUX. HEAT	CFM	SP	HP									
AU-2 HP-2	30,000	24,000	16,700	6.0 KW	1000	0.70	1/2	LENNOX	CBX27UH-036 14HPX-030-230	150	2.68	15/13	1,2,3,4,5,6,7,8,9,10,11	208/1/60	41.0 17.0	45/2 30/2
AU-3 HP-3	30,000	24,000	16,700	6.0 KW	1000	0.70	1/2	LENNOX	CBX27UH-036 14HPX-030-230	140	2.68	15/13	1,2,3,4,5,6,7,8,9,10	208/1/60	41.0 17.0	45/2 30/2

1. FILTER
2. VERTICAL AIRHANDLER
3. CAPACITY BASED ON 80°F DB, 67°F WB, ENTERING AIR TEMPERATURE AND 95°F DB O.A.TEMP.
4. SEE ELECTRICAL DRAWINGS FOR ELECTRICAL CHARACTERISTICS.
5. EXTERNAL STATIC PRESSURE DROP DOES NOT INCULDE COOLING COIL PRESSURE DROP.
6. EXPANSION VALVE, FILTER DRIER, SIGHT GLASS, SERVICE VALVES, LOW PRESSURE LOCK-OUT, HIGH PRESSURE SWITCH.
7. REFRIGERANT= 410A
8. LOW AMBIENT KIT. OUTDOOR THERMOSTAT, CRANKCASE HEATER, EVAPORATOR FREEZE THERMOSTAT.
9. MAX. SOUND LEVEL=75 DBA.
10. IF REFRIGERANT LINE IS MORE THAN 80'-0" THAN PROVIDE LIQUID LINE SOLENOID VALVE AND SUBMIT MANUFACTURER'S APPROVED REFRIGERANT PIPES ISOMETRICS.

FLOOR PLAN-HVAC

3/16"=1'-0"

KEY NOTES:

1. COORDINATE EXACT LOCATION WITH OWNER. COMBUSTION AIR AND VENT UPTHROUGH ROOF. RUN CONDENSATE DRAIN TO OUTSIDE AND TERMINATE 12" AFF.
2. 12'Ø TOILET EXHAUST DUCT UP THROUGH ROOF WITH FLASHING AND CAP.
3. 8'Ø TOILET EXHAUST DUCT UP THROUGH ROOF WITH FLASHING AND CAP.
4. RUN CONDENSATE DRAIN FROM AU-1 TO JANITROL CLOSET SINK AND TERMINATE 12" ABOVE THE SINK. PROVIDE 3"Ø OUTSIDE AIR INTAKE DUCT WITH MANUAL VOLUME DAMPER (DAMPER IS NOT SHOWN)
5. 6"'Ø TOILET EXHAUST DUCT UP THROUGH ROOF WITH FLASHING AND CAP.
6. 20/16 RETURN AIR DUCT
7. MAINTAIN CLEARANCES AROUND AND BETWEEN UNITS AS RECOMMENDED BY MANUFACTURER.
8. MOUNT CONDENSING UNIT ON 4" HIGH CONCRETE PAD.

ISSUED FOR CONSTRUCTION. DATE: 00 / 00 / 14

REVISIONS

Number	Date:	Remarks:	Number	Date:	Remarks:
X	00-00-00	N/A			

CONSULTANTS

Date Plotted : Nov 24, 2014 - 11:46am
File: 2014-024M1-NOFORCED AIR-112014R.DWG

ATLANTA MANAGEMENT AND ENGINEERING CONSULTANTS, INC.
2081 LULLWATER PLACE, LAWRENCEVILLE, GA 30043
Tel. (770)-962-3636

CARTER WATKINS ASSOCIATES
ARCHITECTS, INC.
POST OFFICE BOX 1004
137 EAST WASHINGTON STREET
MONROE, GEORGIA 30655
Fax: 770/267-1064
email@carterwatkins.com www.carterwatkins.com

SEAL

No. 015330

BARTOW COUNTY
FIRE STATION NO. 9
Battalion Headquarters
171 BROWN FARM ROAD, CARTERSVILLE, GEORGIA

SHEET TITLE:
FLOOR PLAN
HVAC

PRINTED: Nov 24, 2014

NUMBER:
M-1

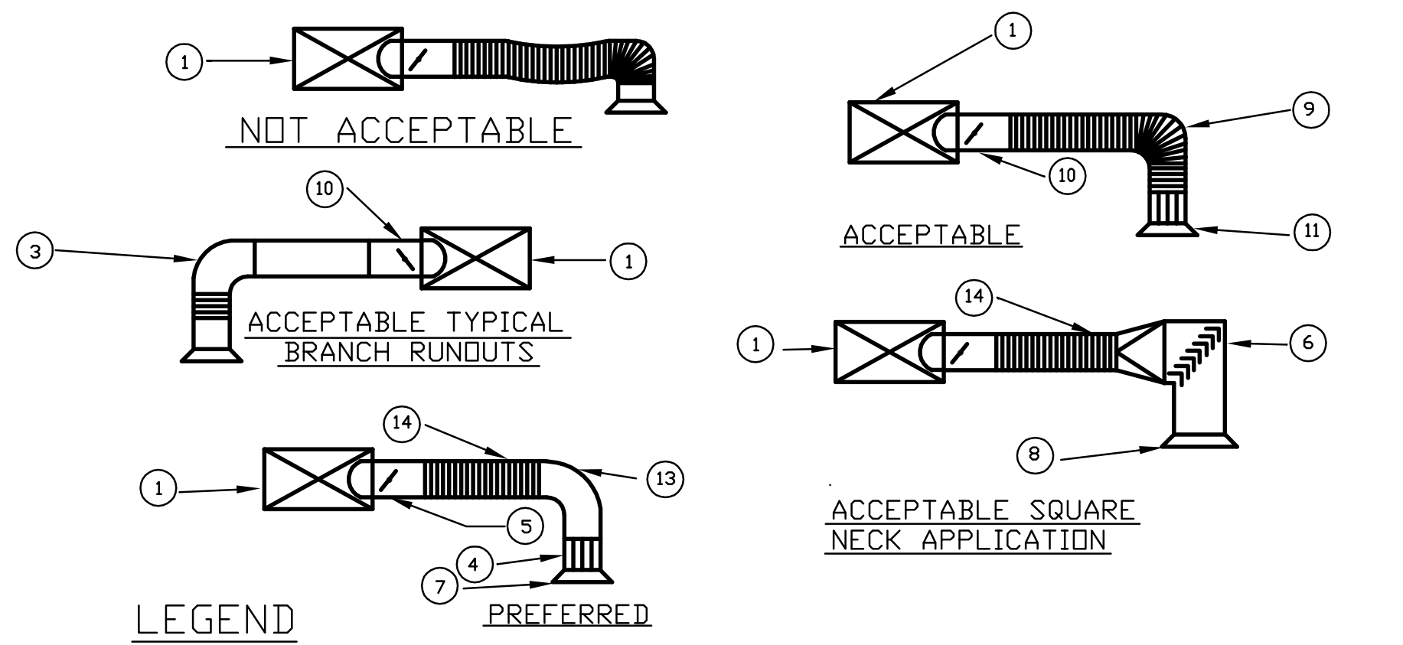
NOT ACCEPTABLE
ACCEPTABLE TYPICAL BRANCH RUNOUTS
PREFERRED
ACCEPTABLE
ACCEPTABLE SQUARE NECK APPLICATION
1
3
4
5
6
7
8
9
10
11
13
14

LEGEND

1 TRUNK DUCT
2 FLEXIBLE DUCT
3 FULL RADIUS ELBOW
4 STRAIGHTENING VANES TO ADJUST AIR EVENLY OVER DIFFUSER
5 SPIN IN CONN. W/SCOOP AND DAMPER. DO ALL ROUGH BALANCING AT THIS DAMPER. (TYPICAL)
6 SQUARE ELBOW WITH TURNING VANES. DISTRIBUTION VANES IN DIFFUSER NOT REQUIRED.
7 ROUND NECK DIFFUSER WITH VOLUME DAMPER FOR FINISH BALANCING ONLY.
8 SQUARE NECK DIFFUSER WITH VOLUME DAMPER FOR FINISH BALANCING ONLY.
9 DUCT SUPPORTED TO PROVIDE EQUIVALENT OF FULL RADIUS ELBOW. SUBMIT DETAILS.
10 SPIN IN WITH DEFLECTOR AND DAMPER .
11 VANES AND DIFFUSER AS BELOW.
12 ROUND DUCT.
13 FULL RADIUS SHEET METAL ELBOW.
14 FLEXIBLE DUCT. SUPPORT TO PREVENT SAG.

TYPICAL FLEXIBLE DUCT CONNECTIONS

NO SCALE

HVAC GENERAL NOTES

1. CONTRACTOR SHALL BRING TO THE ATTENTION OF THE ARCHITECT ANY CONFLICTS OF WORK PRIOR TO PURCHASE OF EQUIPMENT OR COMMENCEMENT OF WORK. CONTRACTOR SHALL NOT FABRICATE ANY DUCTWORK WITHOUT COORDINATING WITH OTHER DISCIPLINES AND VERIFYING CLEARANCE FOR THE DUCTWORK.

2. CONTRACTOR SHALL VISIT THE JOB SITE AND HAVE A GOOD WORKING KNOWLEDGE AND ACQUAINTANCE OF THE EXISTING JOB SITE AS WELL AS THE CONDITIONS OF THE JOB SITE AND INCLUDE A STATEMENT ON HIS BID THAT HE HAS DONE SO.

3. DEVIATIONS FROM MATERIAL, METHODS, AND PROCEDURES SET FORTH HEREIN MUST BE APPROVED IN WRITING WITH EQUIPMENT AND INSTALLATION SUBMITTALS.

4. CONTRACTOR SHALL REVIEW STRUCTURAL, ELECTRICAL, AND ARCHITECTURAL DRAWINGS BEFORE FABRICATING OR INSTALLING DUCTWORK OR EQUIPMENT TO AVOID ANY CONFLICTS.

5. FIRE DAMPERS SHALL BE RUSKIN MODEL D-IBD2 TYPE "B" WITH 1 « HR RATING. (VERIFY RATING BEFORE SPECIFYING).

6. REQUEST FOR PAYMENT FOR ADDITIONAL COST DUE TO SITE CONDITIONS WILL NOT BE ALLOWED.

7. ALL DUCT DIMENSIONS ARE INSIDE CLEAR

8. CONTRACTOR SHALL SECURE AND PAY FOR ALL PERMITS AND INSPECTIONS REQUIRED BY EVERY APPLICABLE JURISDICTION FOR THE PERFORMANCE OF THE WORK.

9. ALL WORK SHALL MEET THE LOCAL AND STATE, HEATING AND AIR-CONDITIONING, AND ENERGY CODES.

10. SHEET METAL DUCTWORK SHALL BE GALVANIZED STEEL SHEETS OF THICKNESS AS RECOMMENDED, CONSTRUCTED AND DETAILED IN THE LATEST SMACNA CONSTRUCTION STANDARDS. NO FIBERGLASS DUCTWORK SHALL BE USED.

11. ON DUCTWORK SIZES; FIRST DIMENSION GIVEN IS SIDE SHOWN.

12. DUCT TURNS MAY BE ROUND OR SQUARE. ROUND ELBOWS SHALL HAVE INSIDE RADIUS NOT LESS THAN DUCT WIDTH. SQUARE ELBOWS SHALL HAVE DOUBLE WALL TURNING VANES.

13. SUPPLY, RETURN, AND OUTSIDE AIR INTAKE DUCTWORK SHALL BE INSULATED WITH 2"/4" THICK BLANKET, ONE POUND DENSITY WITH REINFORCED FOIL FACE VAPOR BARRIER, U. L. LISTED. (SEE STANDARD MECHANICAL AND ENERGY CODE). ANY AIR SUPPLYING EQUIPMENT (GRILLES, DIFFUSER, REGISTERS, AHU, AND OTHERS) LOCATED IN A NON-AIR-CONDITIONING AREA AND WHICH ARE SUBJECT TO FORM CONDENSATION ON THE SURFACE SHALL BE INSULATED OR LINED. ALL SUPPLY AND RETURN DUCTS AND PLENUM SHALL BE INSULATED WITH A MINIMUM OF R-5 INSULATION WHEN LOCATED IN UNCONDITIONED SPACES AND WITH A MINIMUM OF R-8 INSULATION WHEN LOCATED OUTSIDE THE BUILDING (E.G. ATTIC).

14. CONTRACTOR SHALL COORDINATE VOLTAGE AND PHASE OF EACH EQUIPMENT WITH ELECTRICAL CONTRACTOR BEFORE ORDERING.

15. SYSTEM SHALL BE AIR BALANCED.

16. FLEX DUCT SHALL NOT EXCEED 8'-0" IN LENGTH. FINAL 4'-0",(INCLUDING THE ELBOW AT THE DIFFUSER), TO DIFFUSER SHALL BE GALVANIZED DUCT. FLEX DUCT SHALL BE USED ONLY ON LAY-IN CEILING.

17. ALL ROUND DUCT SHALL BE PROPERLY WRAPPED, TAPED AND SUPPORTED SO AS TO REDUCE NOISE AND VIBRATION.

18. PROVIDE OPERATIONS AND MAINTENANCE MANUALS FOR ALL EQUIPMENT.

19. ALL LOW VOLTAGE (24 VOLTS AND BELOW) CONTROL AND INTERLOCK WIRING IS INCLUDED IN THIS DIVISION.

20. SMOKE DETECTORS SHALL BE PROVIDED AT ALL EQUIPMENT SUPPLYING OR EXHAUSTING GREATER THAN 2000 CFM OR SERVING MEANS OF EGRESS (CORRIDOR)IN THE RETURN DUCT (CORRIDOR) PRIOR TO OUTDOOR AIR CONNECTIONS (IMC-2006) AND SUPPLY AIR DUCT (Ga. Amendments).
    a. SMOKE DETECTORS ARE NOT REQUIRED IN THE RETURN/SUPPLY AIR SYSTEM WHERE CONNECTION ACCORDING TO NFPA-90A, MECHANICAL CODE SECTION606, AND LOCAL CODES. AIR SYSTEM WHERE ALL PORTIONS OF THE BUILDING SERVED BY THE AIR DISTRIBUTION SYSTEM ARE PROTECTED BY AREA SMOKE DETECTORS CONNECTED TO A FIRE ALARM SYSTEM IN ACCORDANCE WITH THE INTERNATIONAL FIRE CODE.

21. THE SMOKE DETECTOR ACTIVATION SHALL CAUSE A VISUAL AND AN AUDIBLE SIGNAL IN A NORMALLY OCCUPIED AREA, AND SMOKE DETECTOR TROUBLE CONDITIONS SHALL BE INDICATED VISUALLY OR AUDIBLY IN A NORMALLY OCCUPIED AREA AND SHALL BE IDENTIFIED AS AIR DUCT DETECTOR TROUBLE. (COORDINATE WITH FIRE ALARM CONTRACTOR). CONTRACTOR SHALL PROVIDE AND INSTALL SMOKE DETECTORS UNLESS OTHERWISE NOTED. COORDINATE WITH ELECTRICAL AND FIRE ALARM CONTRACTOR FOR THE TYPE OF SMOKE DETECTOR.

22. EACH AIR DISTRIBUTION SYSTEM SHALL BE PROVIDED WITH NOT LESS THAN ONE MANUALLY OPERABLE MEANS TO STOP THE OPERATION OF SUPPLY, RETURN, AND EXHAUST FANS IN AN EMERGENCY. THE MEANS OF MANUAL OPERATION SHALL BE LOCATED AT AN APPROVED LOCATION.

23. RUN MIN. 3/4" OR FULL SIZE OF UNIT CONNECTION CONDENSATE DRAIN FROM UNIT TO THE APPROVED PLACE OF DISPOSAL AS PER MECHANICAL CODE SECTION 307.2. OR NEAREST DRAIN.

24. AIR-CONDITIONING UNITS SHALL HAVE FACTORY INSTALLED VIBRATION (INTERNAL) ISOLATORS.

25. DIFFUSERS ARE TO BE CONNECTED TO DUCTWORK WITH SPIN-IN FITTING EXTRACTOR AND MANUAL VOLUME DAMPER. EXACT LOCATION OF ALL DIFFUSERS TO BE COORDINATED WITH LIGHTING LAYOUT AND REFLECTED CEILING PLAN.

26. AIRFOIL SHAPED SPLITTER DAMPER IS REQUIRED AT EACH DUCT SPLIT WHERE ANY DUCT DIMENSION EXCEEDS 8". PROVIDE LOCKING QUADRANT.

27. ADJUSTABLE, MULTI-BLADE EXTRACTOR SHALL BE REQUIRED AT EACH BRANCH DUCT TAKEOFF WHERE NO OTHER PROVISION HAS BEEN MADE TO DIVERT THE AIR.

28. CONTRACTOR SHALL COORDINATE WITH OTHER DISCIPLINES AND CHECK CLEARANCES TO PREVENT ANY CONFLICTS.

29. PROVIDE REGISTERS AND GRILLES THAT MATCH MOUNTING SURFACE FINISHES AS APPROVED BY THE ARCHITECT.

30. COORDINATE GRILLE AND DIFFUSER LOCATIONS WITH REFLECTED CEILING PLAN.

31. FLEXIBLE DUCT SHALL BE THERMAFLEX M-KC. (SEE LOCAL AND STANDARD MECHANICAL CODE).

32. MOUNT ALL THERMOSTATS AT 4'-6" AFF.(TOP)

33. PROVIDE LOCKING COVER FOR EACH THERMOSTATS.

34. PROVIDE SEVEN-DAY (5-1-1) DAY PROGRAMMABLE THERMOSTATS SINGLE/TWO STAGE HEAT-OFF-COOL-AUTO OR AS APPROVED BY ARCHITECT. CONTRACTOR SHALL MAKE SURE THAT THESE THERMOSTAT ARE COMPATIBLE WITH THE FURNACES(HEAT PUMP) PROVIDED.

35. BRANCH DUCT FROM MAIN TO THE DIFFUSER SHALL BE SAME SIZE OF DIFFUSER NECK CONNECTION UNLESS OTHERWISE NOTED.

36. ALL CONDENSING UNITS SHALL BE MOUNTED ON 4" HIGH CONCRETE PAD AND PROVIDE CLEARANCE AROUND AND THE UNITS AS RECOMMENDED BY THE MANUFACTURER.

37. CONTRACTOR SHALL PREPARE COMPLETE ISOMETRIC DRAWINGS OF REFRIGERANT PIPING AND SHALL BE APPROVED BY THE MANUFACTURER. CONTRACTOR SHALL SUBMIT MANUFACTURER APPROVED DRAWINGS TO THE ARCHITECT WITH MANUFACTURER LETTER STATING THAT REFRIGERANT PIPING IS IN ACCORDANCE WITH FACTORY RECOMMENDATIONS AND WILL NOT HARM EQUIPMENT.

38. PROVIDE AUXILIARY DRAIN PAN UNDER THE UNIT AS REQUIRED BY LOCAL AND STANDARD MECHANICAL CODE SECTION 307.
    a. AN AUXILIARY DRAIN PAN WITHOUT A SEPARATE DRAIN LINE SHALL BE PROVIDED UNDER THE COILS ON WHICH CONDENSATE WILL OCCUR. SUCH PAN SHALL BE EQUIPPED WITH A WATER LEVEL DETECTION DEVICE THAT WILL SHUT-OFF THE EQUIPMENT SERVED PRIOR TO OVERFLOW OF THE PAN.
    b. AN AUXILIARY DRAIN PAN WITH A SEPARATE DRAIN SHALL BE PROVIDED UNDER THE COILS ON WHICH CONDENSATION WILL OCCUR. THE AUXILIARY PAN DRAIN SHALL DISCHARGE TO A CONSPICUOUS POINT OF DISPOSAL TO ALERT OCCUPANTS IN THE EVENT OF A STOPPAGE OF THE PRIMARY DRAIN. THE PAN SHALL HAVE A MINIMUM DEPTH OF 1.5 INCHES, SHALL NOT BE LESS THAN 3 INCHES LARGER THAN THE UNIT OR THE COIL DIMENSIONS IN WIDTH AND LENGTH AND SHALL BE CONSTRUCTED OF CORROSION-RESISTANT MATERIAL. METALLIC PANS SHALL HAVE A MINIMUM THICKNESS OF NOT LESS THAN 0.0276 INCH GALVANIZED SHEET METAL. NON-METALLIC PANS SHALL HAVE A MINIMUM THICKNESS OF NOT LESS THAN 0.0625 INCH.
    c. A SEPARATE OVERFLOW DRAIN LINE SHALL BE CONNECTED TO THE DRAIN PAN PROVIDED WITH THE EQUIPMENT. SUCH OVERFLOW DRAIN SHALL DISCHARGE TO A CONSPICUOUS POINT OF DISPOSAL TO ALERT OCCUPANTS IN THE EVENT OF A STOPPAGE OF THE PRIMARY DRAIN. THE OVERFLOW DRAIN LINE CONNECT TO THE DRAIN PAN AT A HIGHER LEVEL THAN THE PRIMARY DRAIN CONNECTION.

39. CONTRACTOR SHALL VERIFY DUCT PENETRATION THROUGH FIRE RATED WALL WITH ARCHITECTURAL FLOOR PLAN AND INCLUDE IN HIS BID ANY MISSING FIRE DAMPER AND ACCESS PANEL.

40. AIR SHALL BE BALANCED BY A CERTIFIED INDEPENDENT BALANCING CONTRACTOR NOT AFFILIATED WITH TENANT'S MECHANICAL CONTRACTOR. CONTRACTOR SHALL PROVIDE SIX COPIES OF CERTIFIED BALANCING REPORT TO THE OWNER.

41. FRESH AIR INTAKES SHALL NOT BE TAKEN FROM A LOCATION CLOSER THAN 10'-0" FROM ANY SANITARY SEWER VENT OUTLET OR FLUE OR ANY EXHAUST AIR OUTLET, UNLESS SUCH OUTLET IS NOT LESS THAN 24 INCH ABOVE THE FRESH AIR INLET AND SHALL COMPLY LOCAL AND STANDARD MECHANICAL CODE.

42. CONTRACTOR SHALL EXTEND THE CONDENSATE DRAIN FROM THE UNIT TO THE NEAREST DRAIN.

43. DRAWINGS INDICATE LOCATIONS OF FIXTURES, APPARATUS, DUCTWORK AND PIPING; AND WHILE THESE ARE TO BE FOLLOWED AS CLOSELY AS POSSIBLE, IF IT IS NECESSARY TO CHANGE THE LOCATION OF SAME TO ACCOMMODATE BUILDING CONDITIONS, MAKE CHANGES WITHOUT ADDITIONAL COST TO THE OWNER AND AS APPROVED BY THE ARCHITECT.

44. PROVIDE ACCESS TO EQUIPMENT AND APPARATUS REQUIRING OPERATION SERVICE OR MAINTENANCE WITHIN THE LIFE OF THE SYSTEM.

45. DO NOT RUN PIPING OR DUCTWORK OR LOCATE EQUIPMENT (WITH RESPECT TO SWITCHBOARDS, PANEL BOARDS, POWER PANELS, MOTOR CONTROL CENTERS OR DRY TYPE TRANSFORMERS WITHIN 42" IN FRONT OF EQUIPMENT, OVER EQUIPMENT, OR WITHIN 36" HORIZONTALLY OF SAME SPACE.

46. ALL MATERIALS AND EQUIPMENT SHALL FIT THE SPACE AVAILABLE, WITH MANUFACTURER'S RECOMMENDED CLEARANCE FOR ACCESS.

47. SCHEDULED FAN STATIC PRESSURES ARE ESTIMATED. PROVIDE AND ADJUST DRIVES TO DELIVER SCHEDULED AIR QUANTITIES AGAINST ACTUAL SYSTEM RESISTANCE. CONTRACTOR SHALL MAKE CHANGES TO SHEAVES, BELTS, VALVES, AND DAMPERS OR PROVIDE ADDITIONAL DAMPERS REQUIRED TO PROVIDE AIR QUANTITIES SHOWN ON THE DRAWINGS.

48. PROVIDE LABELS FOR EACH EQUIPMENT. LABELS TO BE ENGRAVED LAMINATED BAKELITE NAMEPLATES WITH 1/4" HIGH WHITE CUT LETTERS; SECURE TO EQUIPMENT.

49. DIMENSIONS, CONNECTIONS, AND INSTALLATION DETAILS OF EQUIPMENT SUPPLIED BY SEVERAL ACCEPTABLE MANUFACTURERS MAY VARY. CONTRACTOR SHALL BE FULLY RESPONSIBLE OF COMPLIANCE WITH REQUIREMENTS OF PLANS AND SPECIFICATION FOR ANY SUBSTITUTE EQUIPMENT.

50. BLADES OF FIRE DAMPERS SHALL BE OUT OF AIR STREAM.

51. CONTRACTOR SHALL NOT FABRICATE ANY DUCT WORK WITHOUT COORDINATING WITH OTHER DISCIPLINE AND VERIFYING THE CLEARANCE ABOVE THE CEILING.

52. CONTRACTOR SHALL INFORM THE OWNER THAT WHEN A SINGLE UNIT SERVES SEVERAL SPACES THE TEMPERATURE MAY VARY FROM ONE SPACE TO THE OTHER.

53. DUCT OR PIPE PENETRATING A FIRE RATED WALL OR FLOOR SHALL BE SEALED WITH THE FIRESTOP SEALANT.

54. ACCEPTABLE MANUFACTURERS: TRANE, LENNOX, YORK, TITUS, KRUEGER, PENN, ACME, COOK. NO OTHER MANUFACTURERS SHALL BE ACCEPTABLE.

55. CONTRACTOR SHALL SUBMIT EQUIPMENT DATA FOR APPROVAL.

56. START-UP OF MECHANICAL SYSTEMS SHOULD INCLUDE TEMPORARY FILTERS TO ELIMINATE CONSTRUCTION DUST AND DEBRIS, AND A SYSTEM FLUSHING WITH MAXIMUM OUTSIDE AIR INTAKE FOR AN EXTENDED PERIOD TO DISSIPATE CHEMICALS DISCHARGED FROM BUILDING MATERIALS AND PRODUCTS. INSTALL PERMANENT FILTERS PRIOR TO BUILDING OCCUPANCY BY OWNER. PROVIDE INSTALLATION AND START-UP CERTIFICATION FROM MAJOR EQUIPMENT MANUFACTURERS.

57. FLUE FOR WATER HEATER SHALL BE INSTALLED BY MECHANICAL CONTRACTOR UNLESS OTHERWISE NOTED. SEE PLUMBING DRAWINGS.

58. PROVIDE REFRIGERANT DETECTOR AS REQUIRED BY THE CODE.

59. BACK SIDE OF (NON-AIR-CONDITIONING SIDE) SUPPLY DIFFUSER INCLUDING FLANGE SITTING ON METAL CEILING GRID SHALL BE INSULATED TO PREVENT CONDENSATION. INSULATION SHALL BE ADHERE TO DIFFUSER TO PREVENT ANY AIR MOVEMENT BETWEEN DIFFUSER AND INSULATION. INSULATION IS NOT REQUIRED IF CEILING IS USED AS A RETURN AIR PLENUM.

60. THIS CONTRACTOR SHALL GIVE ALL ELECTRICAL INFORMATION (INCLUDING VOLTAGES, AMPS, PHASE) PERTAINING TO MECHANICAL EQUIPMENT TO ELECTRICAL CONTRACTOR BEFORE FINAL CONTRACT SO THAT ELECTRICAL CONTRACTOR INCLUDES IN HIS CONTRACT. CONTRACTOR SHALL GET APPROVAL FROM ELECTRICAL CONTRACTOR BEFORE ORDERING EQUIPMENT.

61. PROVIDE ATTIC VENTILATION.

62. PROVIDE LOW AMBIENT KIT AND HEAD PRESSURE CONTROLLER ON ALL INTERIOR AIR-CONDITIONING UNIT TO PREVENT CONDENSATION ON THE SURFACE OF DIFFUSER.

63. BRANCH ROUND DUCTWORK TAPS LOCATED ABOVE THE ACCESSIBLE CEILING AND SERVING ONLY ONE DIFFUSER SHALL HAVE SPIN-IN DAMPER AND SCOOP WHETHER IT IS SHOWN ON DRAWINGS OR NOT..

64. MANUAL VOLUME DAMPER AT THE SPIN-IN FITTING OF BRANCH ROUND DUCT LOCATED ABOVE THE INACCESSIBLE CEILING SHALL BE OMITTED. PROVIDE MEANS OF AIR BALANCE.

65. MOUNTING FRAME OF CEILING MOUNTED AIR DISTRIBUTION DEVICES SHALL BE COMPATIBLE WITH CEILING TYPE.

66. FLEXIBLE DUCT RUN-OUTS TO DIFFUSERS SHALL BE INSTALLED FREE OF KINKS AND SAGS.

67. PORTION OF DUCTWORK OR PIPING VISIBLE THROUGH GRILLES AND REGISTERS IN FINISHED AREAS SHALL BE PAINTED FLAT BLACK.

68. PROVIDE MANUAL VOLUME DAMPER IN OUTSIDE AIR INTAKE DUCT AT RETURN AIR DUCT CONNECTION AND IN RETURN AIR DUCT TO BALANCE OUTSIDE AIR AND RETURN AIR REGARDLESS WHETHER IT IS SHOWN ON PLANS OR NOT.

69. CONTRACTOR SHALL NOT PURCHASE ANY EQUIPMENT WITHOUT WRITTEN APPROVAL OF MECHANICAL, ELECTRICAL, AND STRUCTURAL ENGINEER. ARCHITECT AND ENGINEER MAY NOT HAVE CO-ORDINATED FINAL EQUIPMENT DATA.

REVISIONS

Number	Date:	Remarks:	Number	Date:	Remarks:
X	00-00-00	N/A			

CONSULTANTS

Date Plotted : Nov 24, 2014 - 11:47am
file: 2014-024M2.DWG

AMEC
ATLANTA MANAGEMENT
AND ENGINEERING
CONSULTANTS, INC.
2081 LULLWATER PLACE, LAWRENCEVILLE, GA. 30043
Tel. (770)-962-3636

CARTER WATKINS ASSOCIATES
ARCHITECTS, INC.
POST OFFICE BOX 1004
137 EAST WASHINGTON STREET
MONROE, GEORGIA 30655
Fax: 770/267-1064
email@carterwatkins.com www.carterwatkins.com

SEAL
No. 015330

BARTOW COUNTY
FIRE STATION NO. 9
Battalion Headquarters
171 BROWN FARM ROAD, CARTERSVILLE, GEORGIA

SHEET TITLE:
HVAV GENERAL NOTES

PRINTED: Nov 24, 2014

NUMBER:
M-2

ISSUED FOR CONSTRUCTION. **DATE:** 00 / 00 / 14

PLUMBING FIXTURE CONNECTION SCHEDULE

SYMBOL	FIXTURE	RUN OUT SIZES			MTG HT.	DESCRIPTION
		W	CW	HW		
P-1	WATER CLOSET (FLUSH TANK)	3"	1/2"	-	15"	15" FLOOR TO RIM
P-1A	WATER CLOSET (FLUSH TANK)	3"	1/2"	-	18"	18" FLOOR TO RIM (HANDICAPPED)
P-2	LAVATORY WALL HUNG	1 1/4"	1/2"	1/2"	29"	29" FLOOR TO BOTTOM OF APRON
P-2A	LAVATORY WALL HUNG	1 1/4"	1/2"	1/2"	29"	29" FLOOR TO BOTTOM OF APRON (HANDICAPPED)
P-3	SHOWER	1 1/2"	1/2"	1/2"		
P-3A	SHOWER	1 1/2"	1/2"	1/2"		(HANDICAPPED)
P-4	2-COMPARTMENT SINK	1 1/2"	1/2"	1/2"	-	COUNTERTOP
P-5	DISHWASHER		-	1/2"		
P-6	MOP SINK	3"	1/2"	1/2'	-	
P-7	LAUNDRY SINK	1 1/4"	1/2"	1/2"		
P-8	WASHER - LAUNDRY	1 1/4"	1/2"	1/2"		
P-9	GEAR WASHER - LAUNDRY	1 1/4"	1/2"	1/2"		
	BOTTLE COOLER	-	1/2"			PROVIDE VALVE BOX

1. SEE ARCHITECT DRAWINGS FOR THE ELEVATION AND LOCATION.

LEGEND

SAN	SOIL AND WASTE PIPING	—— SAN ——
V	VENT PIPING	—— V —— V ——
C.W.	COLD WATER PIPING	—— - —— - ——
H.W.	HOT WATER PIPING	— - - —— - - —
HWR	HOT WATER RECIRCULATING	—— - - - ——
G.	GAS PIPING	— GAS —— GAS —
G.V.	GATE VALVE	——⋈—— - ——
G.C.	GAS COCK	——⦶——
W	WASTE	
V	VENT	
V.T.R.	VENT THRU ROOF	
F.D.	FLOOR DRAIN	

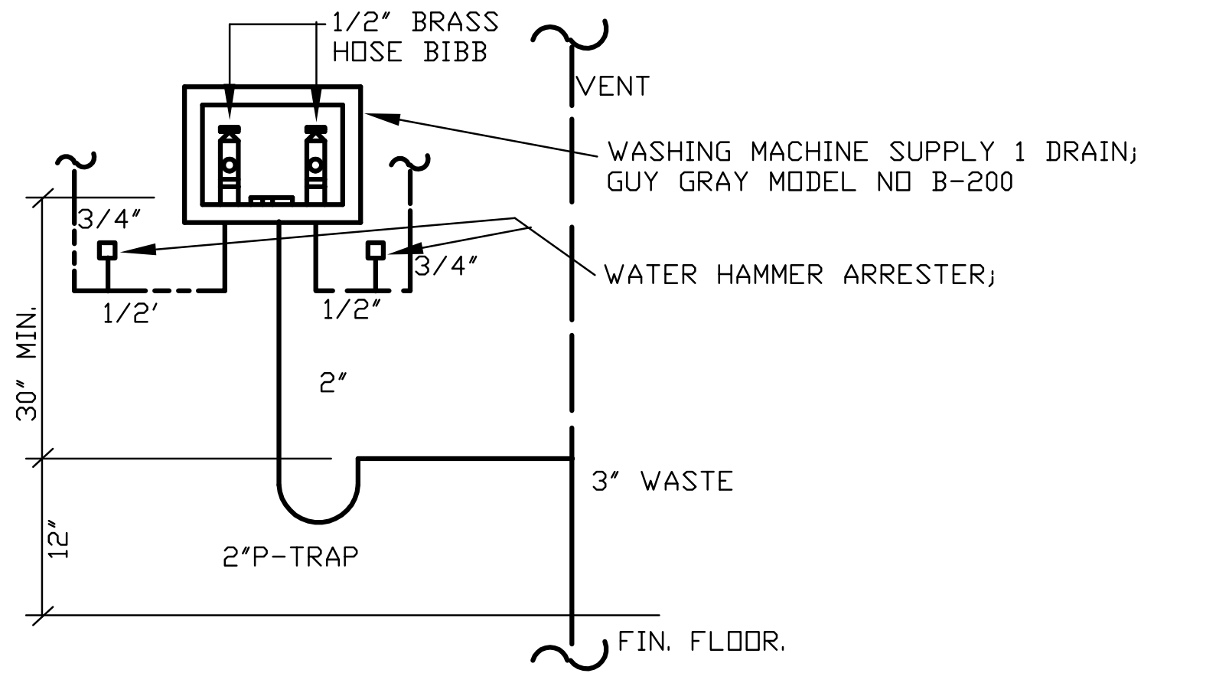
1/2" BRASS HOSE BIBB
VENT
WASHING MACHINE SUPPLY 1 DRAIN; GUY GRAY MODEL NO B-200
3/4"
3/4"
WATER HAMMER ARRESTER;
1/2'
1/2"
30" MIN.
2"
3" WASTE
12"
2"P-TRAP
FIN. FLOOR.

DETAIL-WASHING MACHINE CONNECTION

N.T.S.

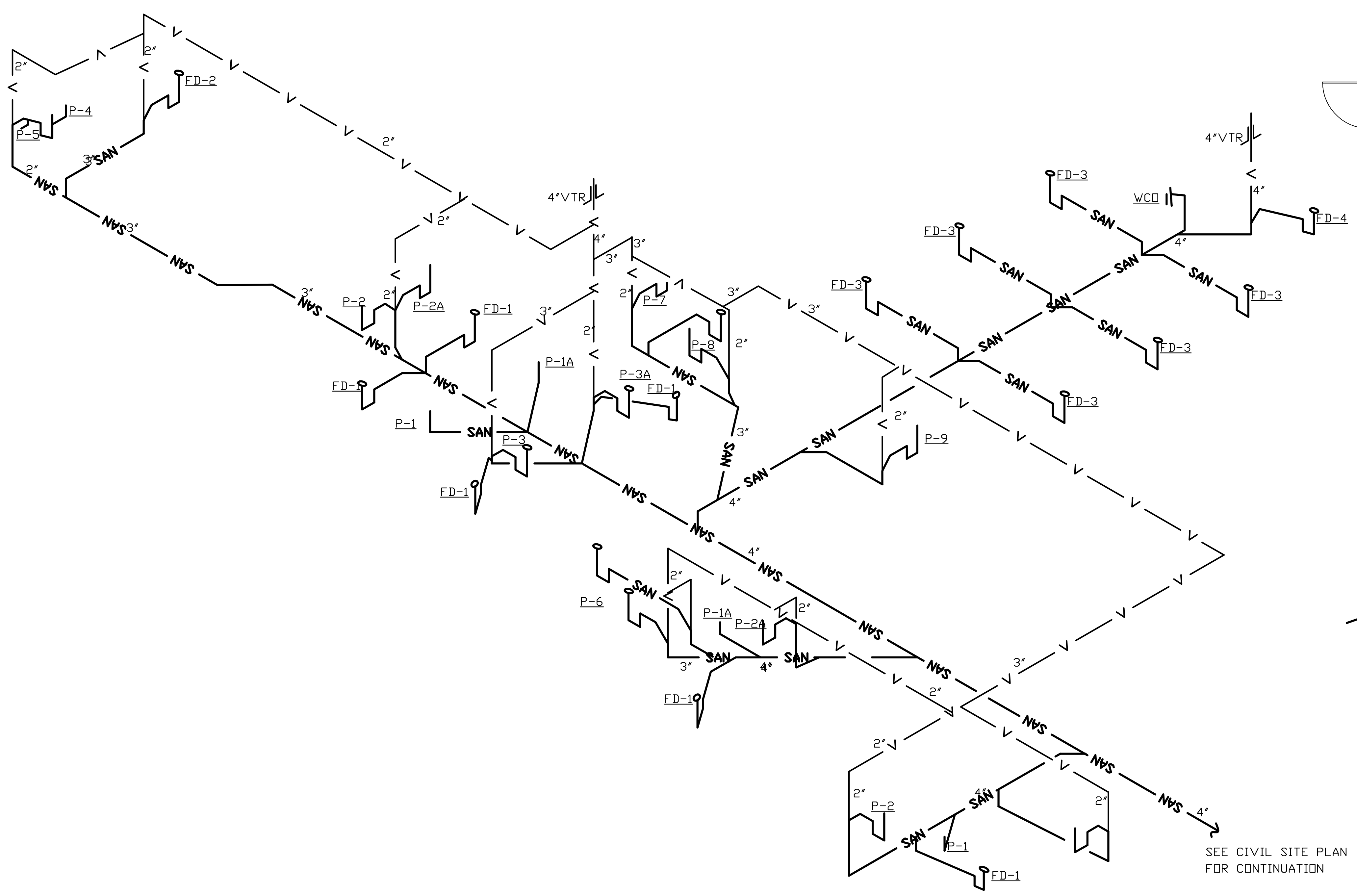
P-5
P-4
FD-2
SAN
2"
3"
4"VTR
FD-3
WCO
FD-4
4"
P-2
P-2A
FD-1
P-7
P-8
P-1A
P-3A
P-1
P-3
P-9
P-6
P-2A
P-1A
FD-1
P-2
P-1
V
SEE CIVIL SITE PLAN FOR CONTINUATION

SANITARY RISER

NOT TO SCALE

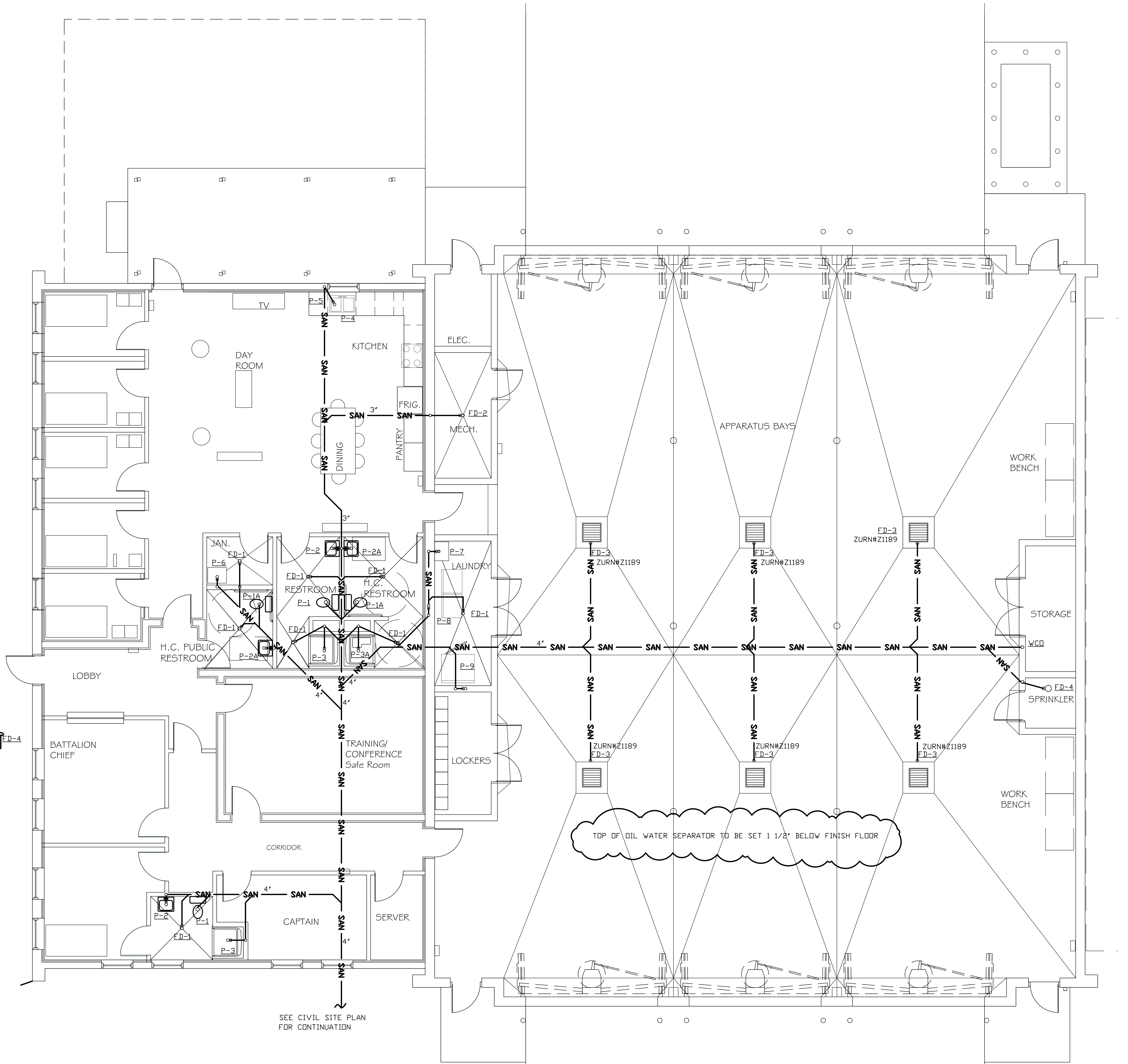
TV
DAY ROOM
KITCHEN
P-5
P-4
FRIG.
PANTRY
DINING
ELEC.
MECH.
FD-2
3"
APPARATUS BAYS
WORK BENCH
JAN.
P-6
FD-1
P-2
P-2A
RESTROOM
H.C. RESTROOM
P-1
P-1A
H.C. PUBLIC RESTROOM
P-3
P-3A
P-7
LAUNDRY
P-8
P-9
FD-3
ZURN#Z1189
STORAGE
WCO
FD-4
SPRINKLER
LOBBY
BATTALION CHIEF
TRAINING/ CONFERENCE Safe Room
LOCKERS
CORRIDOR
CAPTAIN
SERVER
SAN
4"
TOP OF OIL WATER SEPARATOR TO BE SET 1 1/2" BELOW FINISH FLOOR
SEE CIVIL SITE PLAN FOR CONTINUATION

FLOOR PLAN - SANITARY

3/16"= 1'0"

ISSUED FOR CONSTRUCTION. DATE: 00 / 00 / 14

REVISIONS

Number	Date:	Remarks:	Number	Date:	Remarks:
X	00-00-00	N/A			

CONSULTANTS

Date Plotted : Nov 24, 2014 - 11:48am
file: 2014-024P1.DWG

AMEC ATLANTA MANAGEMENT AND ENGINEERING CONSULTANTS, INC.
2081 LULLWATER PLACE, LAWRENCEVILLE, GA. 30043
Tel. (770)-962-3636

CARTER WATKINS ASSOCIATES ARCHITECTS, INC.
POST OFFICE BOX 1004
137 EAST WASHINGTON STREET
MONROE, GEORGIA 30655
Fax: 770/267-1064
email@carterwatkins.com www.carterwatkins.com

SEAL
No. 015330
T. PARIKH

BARTOW COUNTY
FIRE STATION NO. 9
Battalion Headquarters
171 BROWN FARM ROAD, CARTERSVILLE, GEORGIA

SHEET TITLE:
FLOOR PLAN - SANITARY AND SANITARY RISER

PRINTED: Nov 24, 2014

NUMBER:
P-1

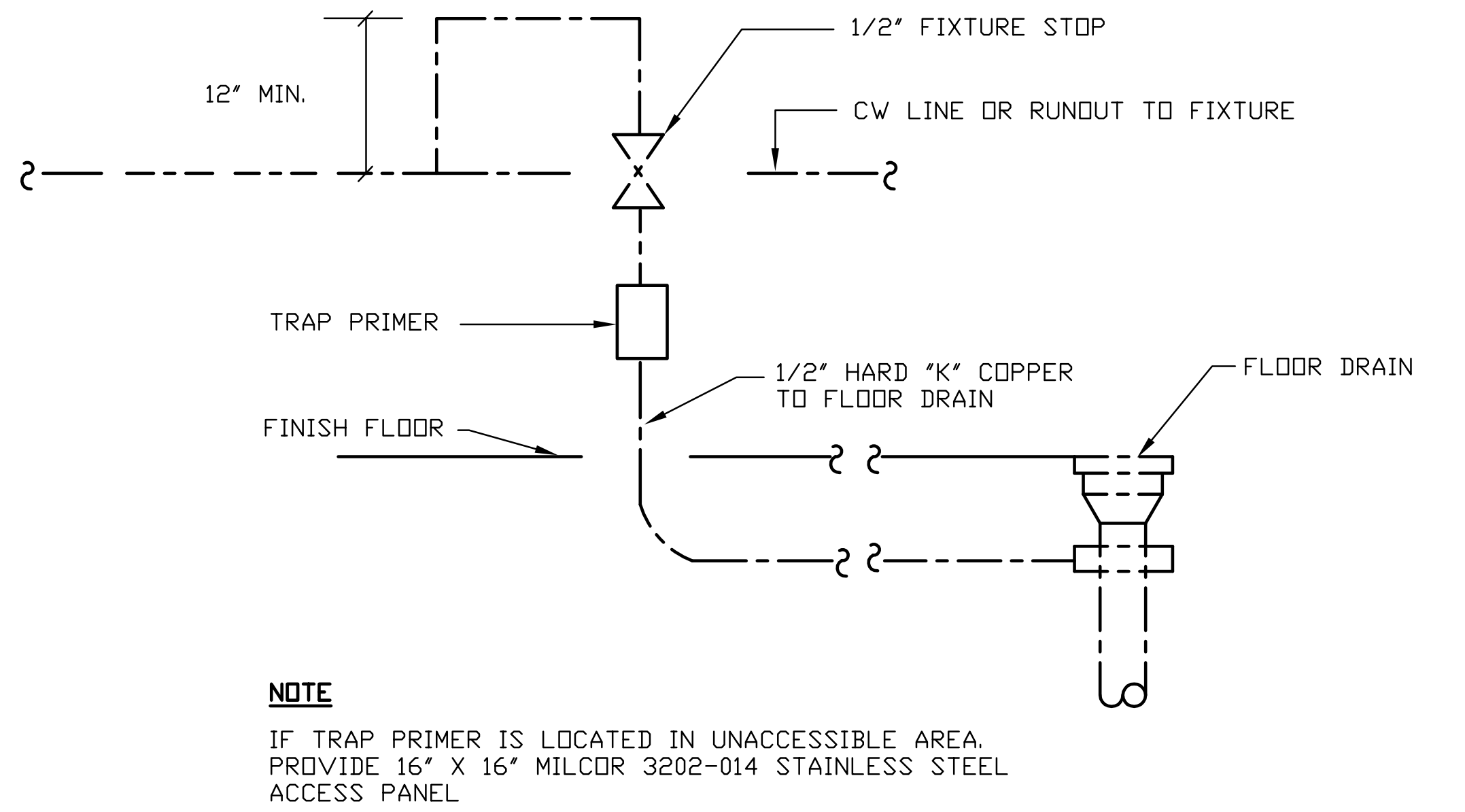
12" MIN.
1/2" FIXTURE STOP
CW LINE OR RUNOUT TO FIXTURE
TRAP PRIMER
1/2" HARD "K" COPPER TO FLOOR DRAIN
FLOOR DRAIN
FINISH FLOOR

NOTE

IF TRAP PRIMER IS LOCATED IN UNACCESSIBLE AREA.
PROVIDE 16" X 16" MILCOR 3202-014 STAINLESS STEEL
ACCESS PANEL

DETAIL - TRAP PRIMER

SCHEMATIC

TRAP SEAL PRIMER SHALL BE:
PRECISION PLUMBING PRODUCTS, INC.
MODEL P-2 FOR ONE (1) TWO (2) DRAIN WITH DISTRIBUTION UNIT.
MODEL P-1 WITH DISTRIBUTION UNIT PRIMING THREE (3) TO EIGHT (8) DRAINS.

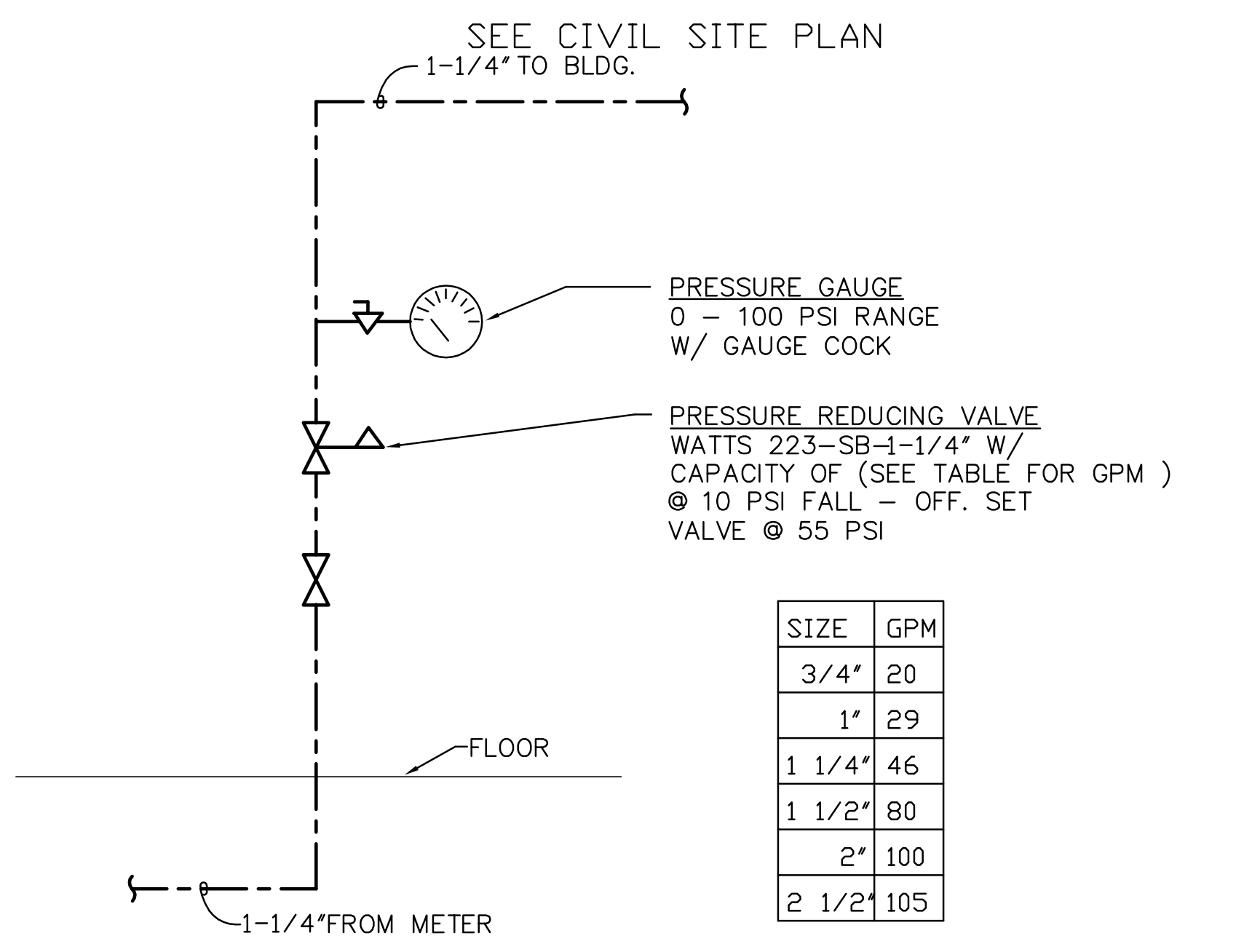
SEE CIVIL SITE PLAN
1-1/4" TO BLDG.
PRESSURE GAUGE
0 - 100 PSI RANGE
W/ GAUGE COCK
PRESSURE REDUCING VALVE
WATTS 223-SB-1-1/4" W/
CAPACITY OF (SEE TABLE FOR GPM)
@ 10 PSI FALL - OFF. SET
VALVE @ 55 PSI
FLOOR
1-1/4" FROM METER

SIZE	GPM
3/4"	20
1"	29
1 1/4"	46
1 1/2"	80
2"	100
2 1/2"	105

WATER RISER DETAIL

NO SCALE - SCHEMATIC ONLY

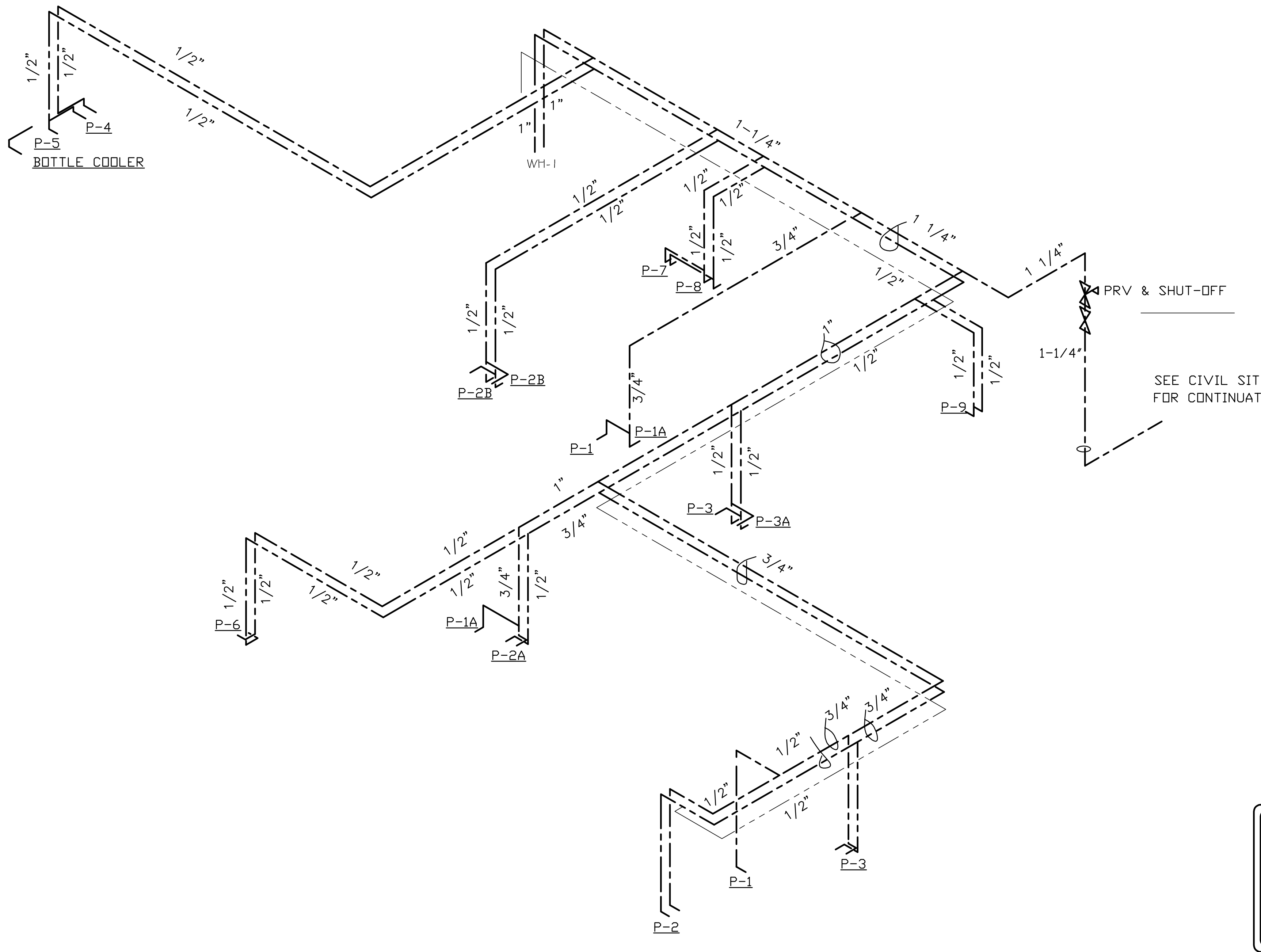
1/2"
1/2"
1/2"
1/2"
P-4
P-5
BOTTLE COOLER
1"
1"
WH-1
1-1/4"
1/2"
1/2"
1/2"
1/2"
3/4"
P-7
P-8
1 1/4"
1 1/4"
PRV & SHUT-OFF
1-1/4"
SEE CIVIL SITE PLAN
FOR CONTINUATION
1/2"
1/2"
P-2B
P-2B
1"
1/2"
P-9
3/4"
P-1
P-1A
1"
1/2"
1/2"
P-3
P-3A
1/2"
1/2"
1/2"
1/2"
1/2"
3/4"
3/4"
1/2"
P-6
P-1A
P-2A
3/4"
3/4"
3/4"
1/2"
1/2"
1/2"
P-1
P-3
P-2

ALL FLOOR DRAINS SHALL HAVE TRAP PRIMER

WATER RISER

NOT TO SCALE

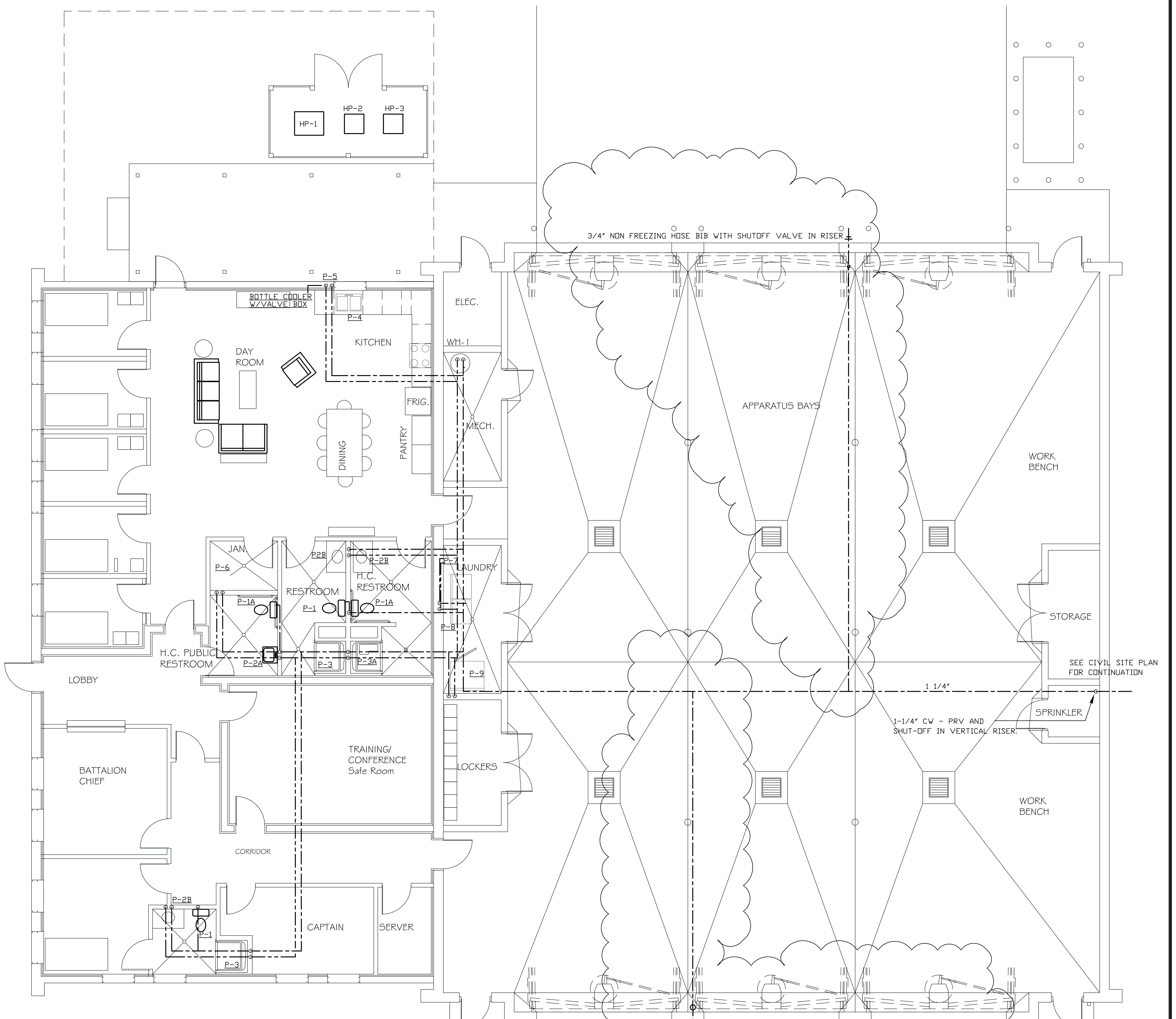
HP-1
HP-2
HP-3
P-5
BOTTLE COOLER
W/VALVE BOX
P-4
KITCHEN
ELEC.
WH-1
DAY
ROOM
FRIG.
MECH.
DINING
PANTRY
JAN.
P-6
P2B
P-2B
RESTROOM
H.C.
RESTROOM
LAUNDRY
P-7
P-1A
P-1
P-1A
P-8
H.C. PUBLIC
RESTROOM
P-2A
P-3
P-3A
P-9
LOBBY
BATTALION
CHIEF
TRAINING/
CONFERENCE
Safe Room
LOCKERS
CORRIDOR
P-2B
P-1
P-3
CAPTAIN
SERVER
3/4" NON FREEZING HOSE BIB WITH SHUTOFF VALVE IN RISER
APPARATUS BAYS
WORK
BENCH
STORAGE
SEE CIVIL SITE PLAN
FOR CONTINUATION
1 1/4"
SPRINKLER
1-1/4" CW - PRV AND
SHUT-OFF IN VERTICAL RISER.
WORK
BENCH
3/4" NON FREEZING HOSE BIB WITH SHUTOFF VALVE IN RISER

FLOOR PLAN - WATER

3/16"= 1'0"

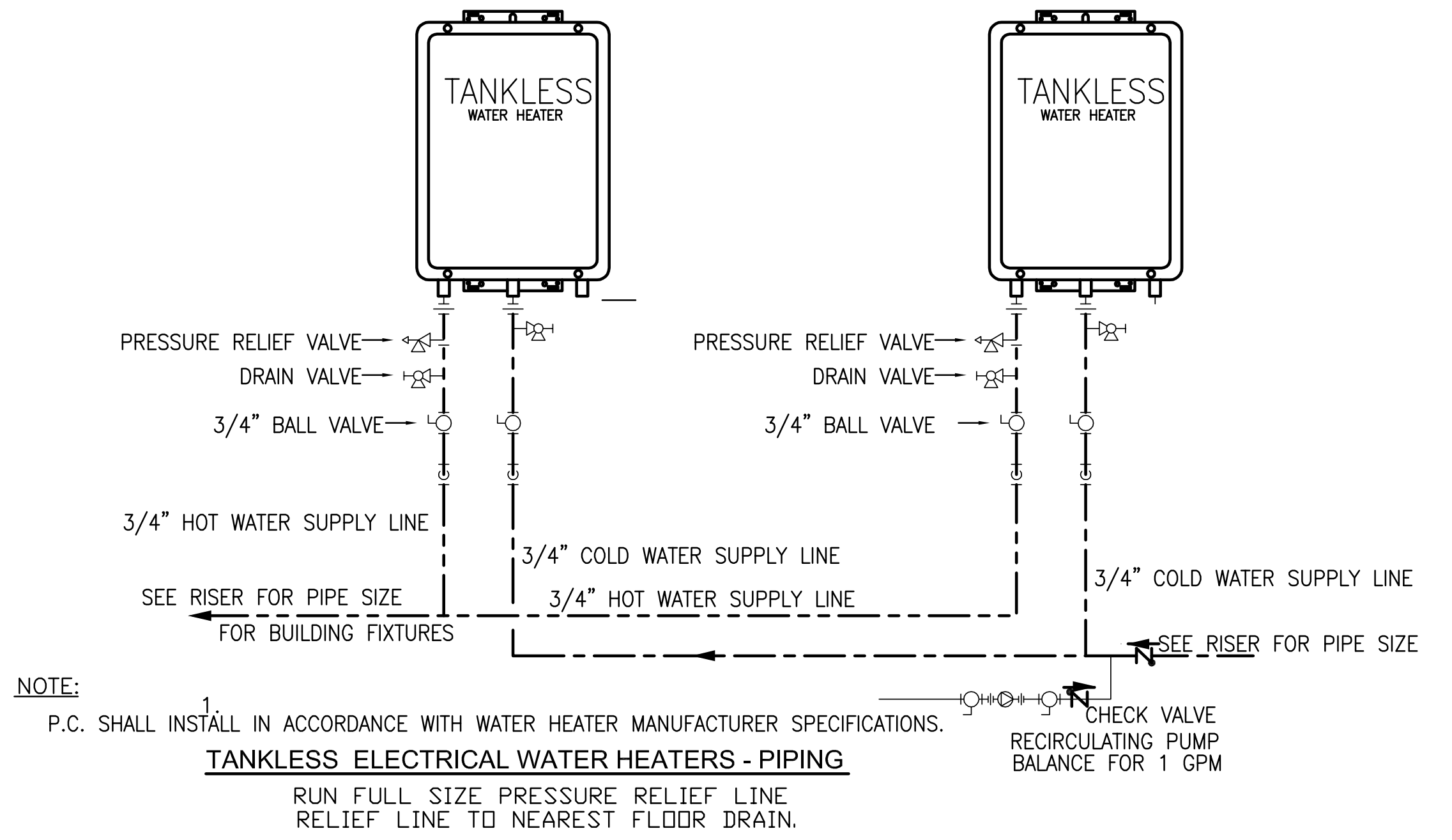
TANKLESS
WATER HEATER
TANKLESS
WATER HEATER
PRESSURE RELIEF VALVE
DRAIN VALVE
3/4" BALL VALVE
PRESSURE RELIEF VALVE
DRAIN VALVE
3/4" BALL VALVE
3/4" HOT WATER SUPPLY LINE
3/4" COLD WATER SUPPLY LINE
3/4" HOT WATER SUPPLY LINE
3/4" COLD WATER SUPPLY LINE
SEE RISER FOR PIPE SIZE
FOR BUILDING FIXTURES
SEE RISER FOR PIPE SIZE
CHECK VALVE
RECIRCULATING PUMP
BALANCE FOR 1 GPM

NOTE:

1. P.C. SHALL INSTALL IN ACCORDANCE WITH WATER HEATER MANUFACTURER SPECIFICATIONS.

TANKLESS ELECTRICAL WATER HEATERS - PIPING

RUN FULL SIZE PRESSURE RELIEF LINE
RELIEF LINE TO NEAREST FLOOR DRAIN.

REVISIONS

Number	Date:	Remarks:	Number	Date:	Remarks:
X	05-15-2015	N/A			

CONSULTANTS

Date Plotted : Jun 23, 2015 - 2:45pm
file: 2014-024P2.DWG

ATLANTA MANAGEMENT
AND ENGINEERING
CONSULTANTS, INC.
2081 LULLWATER PLACE, LAWRENCEVILLE, GA. 30043
Tel. (770)-962-3636

CARTER WATKINS ASSOCIATES
ARCHITECTS, INC.
POST OFFICE BOX 1004
137 EAST WASHINGTON STREET
MONROE, GEORGIA 30655
Fax: 770/267-1064
email@carterwatkins.com www.carterwatkins.com

SEAL

No. 015330

BARTOW COUNTY
FIRE STATION NO. 9
Battalion Headquarters
171 BROWN FARM ROAD, CARTERSVILLE, GEORGIA

SHEET TITLE: FLOOR PLAN
- WATER AND
WATER RISER

PRINTED: Jun 23, 2015

NUMBER:
P-2

ISSUED FOR CONSTRUCTION. DATE: 05/15/2015

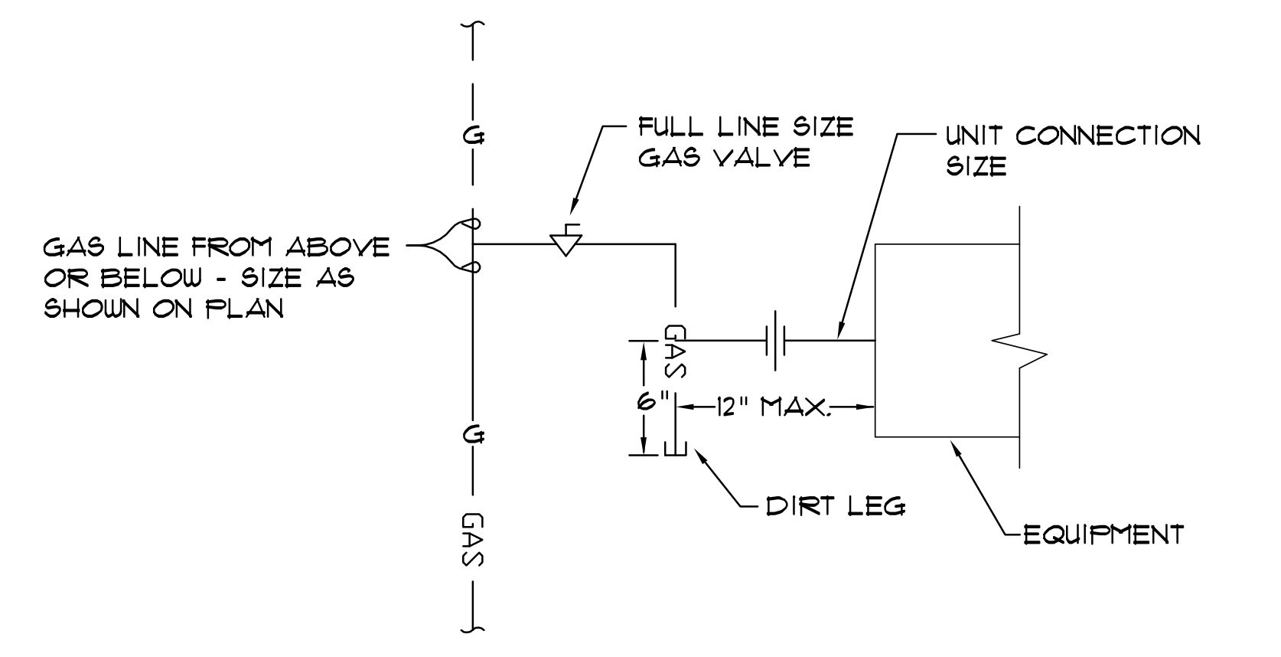
GAS LINE FROM ABOVE OR BELOW - SIZE AS SHOWN ON PLAN
FULL LINE SIZE GAS VALVE
UNIT CONNECTION SIZE
G
G
GAS
GAS
6"
12" MAX.
DIRT LEG
EQUIPMENT

TYPICAL GAS CONNECTION DETAIL

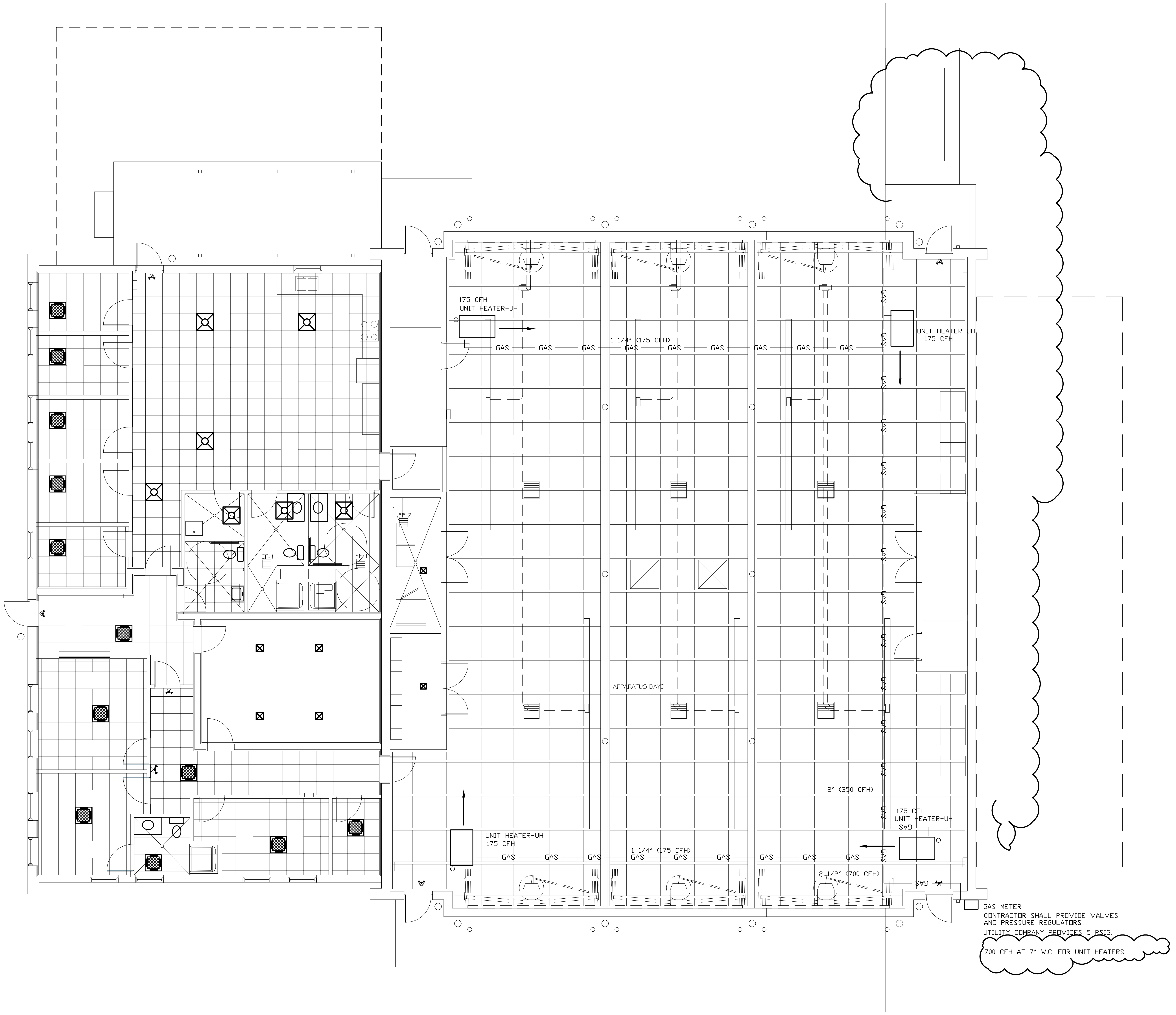
175 CFH
UNIT HEATER-UH
UNIT HEATER-UH
175 CFH
1 1/4" (175 CFH)
GAS
APPARATUS BAYS
2" (350 CFH)
175 CFH
UNIT HEATER-UH
UNIT HEATER-UH
175 CFH
1 1/4" (175 CFH)
2 1/2" (700 CFH)
GAS METER

CONTRACTOR SHALL PROVIDE VALVES AND PRESSURE REGULATORS

UTILITY COMPANY PROVIDES 5 PSIG.

700 CFH AT 7" W.C. FOR UNIT HEATERS

FLOOR PLAN-GAS

3/16"=1'-0"

REVISIONS

Number	Date:	Remarks:	Number	Date:	Remarks:
X	05-15-2015	N/A			

CONSULTANTS

Date Plotted : Jul 17, 2015 - 1:34pm
file: 2014-024P-3.DWG

AMEC
ATLANTA MANAGEMENT AND ENGINEERING CONSULTANTS, INC.
2081 LULLWATER PLACE, LAWRENCEVILLE, GA. 30043
Tel. (770)-962-3636

CARTER WATKINS ASSOCIATES ARCHITECTS, INC.
POST OFFICE BOX 1004
137 EAST WASHINGTON STREET
MONROE, GEORGIA 30655
Fax: 770/267-1064
email@carterwatkins.com www.carterwatkins.com

SEAL

No. 015330

BARTOW COUNTY
FIRE STATION NO. 9
Battalion Headquarters
171 BROWN FARM ROAD, CARTERSVILLE, GEORGIA

SHEET TITLE:
FLOOR PLAN
GAS

PRINTED: Jul 17, 2015

NUMBER:
P-3

ISSUED FOR CONSTRUCTION. DATE: 05/15/2015

PLUMBING FIXTURE SCHEDULE

PROVIDE WATTS " 1/2"MMV-UT" THERMOSTATIC MIXING VALVE UNDER EACH SINK AND LAVATORY TO ADJUST MIXED WATER TEMPERATURE TO PREVENT SCOLD.

P-1A TANK TYPE FLOOR MOUNTED WATER CLOSETS (HANDICAP).

FIXTURE	221AB.004	"AMERICAN STANDARD" 16 1/2" HIGH ELONGATED VITREOUS CHINA, SIPHON JET WITH CLOSED COUPLED TANK COLONY TOILET WITH SUPPLY AND CAPS. (MAX. 1.6 GPF)
TANK	4192B.004	LEFT HAND TRIP LEVER
	4192B	RIGHT HAND TRIP LEVER

TRIP LEVER MUST BE ON WIDE SIDE OF TOILET

SEAT	5324.019	"AMERICAN STANDARD" HEAVY DUTY SOLID PLASTIC SEAT WITH/WITHOUT COVER.
SUPPLY	VA13	"EBC"

P-1 TANK TYPE FLOOR MOUNTED WATER CLOSETS.

FIXTURE	221CB.004	"AMERICAN STANDARD" 15" HIGH ELONGATED VITREOUS CHINA, SIPHON JET WITH CLOSED COUPLED TANK COLONY TOILET WITH SUPPLY AND CAPS. (MAX. 1.6 GPF)
TANK	4192B.004	TANK
SEAT	5324.019	"AMERICAN STANDARD" HEAVY DUTY SOLID PLASTIC SEAT WITH/WITHOUT COVER.
SUPPLY	VA13	"EBC"

P-2A/2 20" x 18" WALL HUNG LAVATORY (HANDICAP).

FIXTURE	0355.012	"AMERICAN STANDARD" VITREOUS CHINA, FRONT OVERFLOW AND INTEGRAL BACK.
FAUCETS	S-20-IPS	"SYMMONS" SINGLE LEVER FAUCET WITH AERATOR.
FAUCETS	1480.115	"ANMERICAN STANDARD"SEVA LESS POP-UP DRAIN AND POP-UP HOLE.
FAUCETS	2175.504	"ANMERICAN STANDARD"COLONY LESS POP-UP DRAIN AND POP-UP HOLE.
DRAIN	SG7WC	"EBC" OFFSET DRAIN WITH BRASS PERFORATED GRID DRAIN.
TRAP	TA125	"EBC" 1 1/4" P TRAP WITH CAST BRASS NUTS AND CLEANOUTS PLUG.
SUPPLY	VA13	"EBC".

HANDI LAV-GUARD INSULATION KIT.

LAVATORY WALL HUNG SUPPORT:

JAY R. SMITH FIG. #700 FOR MASONARY WALLS AND #700-M31 FOR METAL OR WOOD STUD WALLS.

P-3A 36" X 36" SHOWER-HANDICAP (SEE FIG 608.2.1 OF 2010 ADA STANDRARDS)

SHOWER	CERAMIC TILES	
SEAT	BOBRICK B-5181 REVERSIBLE FOLDING SHOWER SETA WITH WHITE PHENOLIC SEAT AND STAINLESS STEEL BRRACKET	
GRAB BAR	BPBRICK B-6861.99 TWO WALL SHOWER GRAB BAR-PEENED	
FLOOR DRAIN	SEE FD-1	
FAUCET	1662.601/R110SS	"AMERICAN STANDARD" TEMPTROL PRESSURE BALANCING MIXING VALVE WITH INTEGRAL SERVICE STOPS, INTEGRAL VOLUME CONTROL AND ADJUSTABLE STOP SCREW TO LIMIT HANDLE TURN. SUPER SHOWER HEAD WITH ARM AND FLANGE. 60" SHOWERHOSE, WALL SUPPLY, SLIDE BAR, HANDSHOWER, VALVE WITH IN LINE VACUUM BREAKER

P-3 36" X 36" SHOWER

SHOWER	CERAMIC TILES	
FLOOR DRAIN	SEE FD-1	
FAUCET	T372.120	"AMERICAN STANDARD" TEMPTROL PRESSURE BALANCING MIXING VALVE WITH INTEGRAL SERVICE STOPS, INTEGRAL VOLUME CONTROL AND ADJUSTABLE STOP SCREW TO LIMIT HANDLE TURN. SUPER SHOWER HEAD

P-4 33" X 22" X 6 1/2" DOUBLE COMPARTMENT KITCHEN SINK

FIXTURE	DL-ADA-2233-A-GR	" JUST " SELF RIMMING TYPE STAINLESS STEEL DOUBLE COMPARTMENT KITCHEN SINK
FAUCET	J-902	SINGLE LEVER WASHERLESS MIXING FAUCET WITH ESCUTCHEON AND 8" SPOUT AERATOR AND SPRAYER
DRAIN	J-ADA-35	STAINLESS STEEL CUP STRAINER WITH REMOVABLE STAINLESS STEEL BASKET. BASKET HAS RUBBER SEAT STOPPER. 1 1/2" OD CHROME PLATED BRASS OFFSET TAILPIECE.
SUPPLY	VA13	"EBC"

CONTRACTOR SHALL NOT PURCHASE SINK WITHOUT VERIFYING WITH CABINET MANUFACTURER AND ARCHITECT. MAKE SURE THAT SINK WILL FIT INTO CABINET COUNTERTOP.

P-5 DISHWASHER

SUPPLIED BY OTHER NAD INSTALLED BY PLUMBING CONTRACTOR

P-6 MOP (SERVICE) SINK

FIXTURE	MSB 2424	FIAT MODEL 24 X 24 X10, A COMBINATION DOME STRAINER AND LINT BASKET MADE FROM STAINLESS STEEL.
FAUCET	PLATE NO.	FIAT CHROME PLATED WITH VACUUM BREAKER,
	830-AA	INTEGRAL STOPS, ADJUSTABLE WALL BRACKET, PAIL HOOK AND 3/4" HOSE THREAD ON SPOUT.
HOSE AND AND HOSE BRACKET	PLATE NO. 832-AA	30" HOSE.
MOP HANGER	PLATE NO. 889-C	MOP HANGER 24"

P-7 LAUNDRY SINK

FIXTURE	TAT1	FIAT HEAVY DUTY POLYETHYLENE, SINGLE BOWL LAUNDRY TUB WITH LEGS
FAUCET	02883906000	POLISHED CHROME FUACET WITH SPOUT AND P-TRAP AND TWO SUPPLY LINES.

P-8 CLOTH WASHER

SUPPLY BY OTHER AND INSTALL BY PLUMBING CONTRACTOR. SEE WASHING MACHINE DETAIL

P-9 GEAR WASHER

SUPPLY BY OTHER AND INSTALL BY PLUMBING CONTRACTOR. SEE WASHING MACHINE DETAIL

TANKLESS WATER HEATERS

FIXTURE	RTE-27	"RHEEM" 27 KW, 208/1/60 VOLTS.

2" FD-FLOOR DRAINS-REST ROOM/SHOWER: (FD-1)

JAY R. SMITH FIG. 2005A-02P050-BB ROUND TOP AND NO HUB OUTLET WITH TRAP PRIMER CONNECTION.

3" FD-FLOOR DRAINS-REST ROOM/SHOWER: (FD-2)

JAY R. SMITH FIG. 2005A-03P050-BB ROUND TOP AND NO HUB OUTLET WITH TRAP PRIMER CONNECTION.

4" APPRATUS BAY OIL AND SEDIMENT INTERCEPTOR: (FD-3)

ZURN Z1189, OIL AND SEDIMENT SEPARATOR, SIZE 60

4" FD-FLOOR DRAINS-REST ROOM/SHOWER: (FD-4)

JAY R. SMITH FIG. 2005A-04P050-BB ROUND TOP AND NO HUB OUTLET WITH TRAP PRIMER CONNECTION.

PLUMBING GENERAL NOTES

1. CONTRACTOR SHALL BRING TO THE ATTENTION OF ARCHITECT ANY CONFLICTS OF WORK PRIOR TO PURCHASE OF EQUIPMENT OR COMMENCEMENT OF WORK.
2. CONTRACTOR SHALL VISIT THE JOB SITE AND HAVE A GOOD WORKING KNOWLEDGE AND ACQUAINTANCE OF THE EXISTING JOB SITE AS WELL AS THE CONDITIONS OF THE JOB SITE AND INCLUDE A STATEMENT ON HIS BID THAT HE HAS DONE SO.
3. REQUEST FOR PAYMENT FOR ADDITIONAL COSTS DUE TO SITE CONDITIONS WILL NOT BE ALLOWED.
4. FURNISH ALL PLAN, LABOR, EQUIPMENT, (EXCEPT AS OTHERWISE INDICATED AND AGREED UPON), AND MATERIALS AS INDICATED, AND PERFORM ALL OPERATIONS IN CONNECTION WITH THE INSTALLATION OF A COMPLETE PLUMBING SYSTEM.
5. THE WORK UNDER THIS SECTION SHALL COMPLY AS MINIMUM REQUIREMENTS WITH APPLICABLE LAWS, ORDINANCES, CODES, AND REGULATIONS OF THE COUNTY, STATE, AND CITY WHERE INSTALLED. WHERE THE REQUIREMENTS OF THESE SPECIFICATIONS ARE MORE THAN RESTRICTIVE THAN APPLICABLE CODES AND REGULATIONS DESCRIBED ABOVE, THE REQUIREMENTS OF PLANS AND SPECIFICATIONS SHALL BE MET.
6. PLUMBING CONTRACTOR SHALL OBTAIN ALL PERMITS AND INSPECTIONS REQUIRED FOR THE INSTALLATION OF THIS WORK AND PAY ALL CHARGES INCIDENT THERETO. HE SHALL DELIVER TO THE ARCHITECT CERTIFICATES OF SAID INSPECTIONS ISSUED BY PROPER AUTHORITIES. HE SHALL PAY ALL COSTS FOR PERMITS AND INSPECTIONS AS REQUIRED BY GOVERNING AUTHORITY.
7. REQUIRED INSURANCE SHALL BE PROVIDED BY THE CONTRACTOR FOR PROTECTION AGAINST PUBLIC LIABILITY AND PROPERTY DAMAGE FOR THE DURATION OF WORK.
8. VERIFY LOCATION, SIZE, INVERTS OF ALL EXISTING UTILITIES PRIOR TO BEGINNING OF CONSTRUCTION. ADVICE ENGINEER OF ANY DISCREPANCIES.
9. FURNISH TWO BROCHURES CONTAINING CATALOG CUTS AND DATA ON PLUMBING FIXTURES, WATER HEATER AND SPECIFY ITEMS, AS WELL AS WARRANTIES AND GUARANTIES PERTAINING THERETO.
10. PROTECT ALL PLUMBING EQUIPMENT AND MATERIALS AGAINST DAMAGE. COMPLETED SYSTEM SHALL BE FREE FROM BLOCKAGE, DEBRIS, AND OBSTRUCTIONS.
11. PROVIDE THE OWNER WITH A WRITTEN AND CERTIFIED GUARANTEE FOR THE COMPLETED WORK COVERING A PERIOD OF ONE YEAR, STARTING FROM THE DAY OF FINAL ACCEPTANCE BY THE OWNER OF THE COMPLETED AND APPROVED SYSTEMS.
12. ELECTRICAL EQUIPMENT SHALL BE FURNISHED AND WIRED FOR THE ELECTRICAL CHARACTERISTICS CALLED FOR IN ELECTRICAL PLANS AND SPECIFICATIONS.
13. PROVIDE CHROME PLATED FLOOR, WALL AND CEILING PLATES AT EACH EXPOSED POINT WHERE PIPES PASS THROUGH FLOOR, WALL AND/OR CEILING.
14. WATER PIPING LESS THAN 1 «" DIAMETER AND ALL RELATED VALVES, FITTINGS, AND JOINTS SHALL BE INSULATED WITH «" COLD AND 1" HOT HEAVY DENSITY FIBERGLASS WITH FKS SELF-SEALING LAP. WATER PIPING GREATER THAN 1 «" DIAMETER AND ALL RELATED VALVES, FITTINGS, AND JOINTS SHALL BE INSULATED WITH «" COLD AND 2" HOT HEAVY DENSITY FIBERGLASS WITH FKS SELF-SEALING LAP. HORIZONTAL STORM DRAIN WITHIN CONDITION SPACES USE 1" PREFORMED FIBERGLASS PIPE INSULATION WITH FACTORY JACKET.
15. JOINT JACKET: JOINTS AND FITTINGS SHALL BE DONE IN ACCORDANCE WITH RECOMMENDATIONS OF MANUFACTURER SUPPLYING THE INSULATION. INSULATION MATERIALS, INCLUDING INSULATION CLOTHS, CEMENTS, JACKETS, FACINGS, ADHESIVES, MASTIC, TAPES, AND OTHER ACCESSORIES SHALL HAVE COMPOSITE FIRE AND SMOKE HAZARD RATING AS TESTED BY U.L. PROCEDURE U1723, NOT EXCEEDING FLAME SPREAD RATING OF 25 AND SMOKE DEVELOPED RATING OF 50. USE OF WATER SOLUBLE TREATMENTS TO ACHIEVE THESE RATINGS IS NOT ACCEPTABLE.
16. WATER PIPING BELOW FLOOR SLAB ON EARTH AND OUTSIDE SHALL BE TYPE "L" HARD COPPER WITH WROUGHT COPPER FITTINGS MADE USING LEAD FREE SOLDER JOINTS. PIPE SUBJECT TO CORROSION DUE TO SALTY DIRT SHALL RUN INSIDE THE PVC PIPE JACKET.
17. INSIDE WATER PIPING SHALL BE TYPE "M" COPPER WITH WROUGHT COPPER FITTINGS MADE USING LEAD FREE SOLDER JOINTS. PLASTIC WATER PIPE WILL NOT BE APPROVED.
18. SOIL, WASTE, AND VENT PIPING SHALL BE SCHEDULE 40 DWV PVC PLASTIC PIPE WITH SOLVENT WELDED JOINTS FOR ALL SOIL, WASTE AND VENT PIPING. PLASTIC PIPE MAY ONLY BE USED IF APPROVED BY PLUMBING AND FIRE CODES. PLASTIC PIPE OR ANY COMBUSTIBLE MATERIAL SHALL NOT BE USED IN THE RETURN AIR CEILING PLENUM.
19. PROVIDE ACCESS PANELS FOR ALL CONCEALED VALVES AND ALL WATER HAMMER ARRESTERS. ACCESS PANELS IN RATED WALL MUST MAINTAIN THE SAME RATING AND MUST MATCH THE FINISH OF THE WALL IN WHICH IT IS INSTALLED.
20. PROVIDE PLUMBING FIXTURES AS INDICATED, COMPLETE WITH EVERYTHING REQUIRED FOR CORRECT OPERATION. THERE SHALL BE NO EXPOSED PLASTIC PIPE OR TRAPS ON ANY PLUMBING FIXTURE. ROUND, FRONT WATER CLOSETS WILL NOT BE APPROVED.
21. FIXTURE NUMBERS ARE KOHLER, JUST, OASIS, FIAT. EQUAL PRODUCTS: CRANE, AMERICAN STANDARD, A. O. SMITH, RHEEM, DELTA, SPEAKMAN, SLOAN, ELKAY, CHURCH, BENEKE, BEMIS, HASLEY TAYLOR, AND SUNROC.
22. CONTRACTOR SHALL SECURE AND PAY FOR ALL PERMITS AND INSPECTIONS REQUIRED BY EVERY APPLICABLE JURISDICTIONS IN THE PERFORMANCE OF THE WORK.
23. ALL WORK SHALL MEET THE LOCAL AND STATE, PLUMBING CODE, AND ENERGY CODE.
24. CONTRACTOR SHALL COORDINATE VOLTAGE AND PHASE OF EACH ITEM OF EQUIPMENT WITH ELECTRICAL CONTRACTOR BEFORE ORDERING.
25. PROVIDE OPERATIONS AND MAINTENANCE MANUALS FOR ALL EQUIPMENT.
26. ALL LOW VOLTAGE CONTROL AND INTERLOCK WIRING IS INCLUDED IN THIS DIVISION.
27. ALL SANITARY PIPE SHALL BE TERMINATED 10'-0" AWAY FROM ANY FRESH INTAKE.
28. WATER HEATER SHALL HAVE ASME P & T RELIEF VALVE WITH DISCHARGE PIPE TO DRAIN OR 10" ABOVE FINISHED GRADE.
29. WATER PIPING RUN IN ATTIC SPACES SHALL BE RUN ON HEATED SIDE OF ATTIC OR CEILING INSULATION. WATER PIPING RUN IN OUTSIDE BUILDING WALLS SHALL BE RUN ON HEATED SIDE OF WALL INSULATION.
30. PROVIDE CLEAN-OUTS WHERE INDICATED AND WHERE REQUIRED BY CODE. (75 FT FOR 4" PIPE AND 50 FT. FOR 3" PIPE. CLEAN-OUT COVER PLATES SHALL BE METAL AND HAVE TOP FLUSH WITH FINISHED WALL, FLOOR OR GRADE. WALL CLEAN-OUTS SHALL BE NO HIGHER THAN 12" ABOVE FLOOR, UNLESS OTHERWISE INDICATED. FOR DWV PVC PLASTIC PIPE SYSTEM, USE CLEAN-OUTS MANUFACTURED BY SMITH, JONESPEC, JOSAM, WADE OR ZURN.
31. CONTRACTOR IS TO SUPPLY ALL SAFETY EQUIPMENT AND SUPERVISION REQUIRED TO ASSURE A SAFE CONSTRUCTION SITE. CONTRACTOR IS SOLELY RESPONSIBLE FOR ALL SAFETY INSPECTIONS, SUPERVISION, AND COMPLIANCE WITH ALL APPLICABLE LAWS.
32. PIPES PASSING THROUGH CONCRETE OR CINDER WALLS AND FLOORS OR OTHER CORROSIVE MATERIAL SHALL BE PROTECTED AGAINST EXTERNAL CORROSION BY A PROTECTIVE SHEATHING OR WRAPPING OR OTHER MEANS THAT WILL WITHSTAND ANY REACTION FROM LIME AND ACID CONCRETE, CINDER OR OTHER CORROSIVE MATERIAL. SHEATHING OR WRAPPING SHALL ALLOW FOR EXPANSION AND CONTRACTION OF PIPING TO PREVENT ANY RUBBING ACTION.
33. A SOIL OR WASTE PIPE OR BUILDING DRAIN PASSING UNDER A FOOTING OR THROUGH A FOUNDATION WALL, SHALL BE PROVIDED WITH A RELIEVING ARCH, OR THERE SHALL BE BUILT INTO THE MASONRY WALL A PIPE SLEEVE TWO PIPE SIZES GREATER THAN THE PIPE PASSING THROUGH OR AS MAY BE APPROVED IN WRITING BY THE PLUMBING OFFICIAL.
34. TRENCHING INSTALLED PARALLEL TO FOOTINGS SHALL NOT EXTEND BELOW THE 45 DEGREE BEARING PLANE OF THE FOOTING OR WALL UNLESS APPROVED BY THE PLUMBING OFFICIAL.
35. WHEN CLEAN-OUTS ARE INSIDE THE BUILDING, CLEAN-OUTS SHALL BE ABOVE THE FLOOD LEVEL RIM OF THE FIXTURES THAT THE HORIZONTAL PIPE SERVES WHEN PRACTICAL.
36. A SHUT OFF VALVE SHALL BE PROVIDED IN THE COLD WATER SUPPLY TO WATER HEATER AND SHALL BE ACCESSIBLE ON THE SAME FLOOR AND WITHIN 3 FT. OF THE HEATER.
37. PROVIDE VACUUM BREAKER OR ANTI-SIPHON AT THE WATER HEATER AS PER CODE.
38. UNDERGROUND WATER SERVICE PIPE AND THE BUILDING DRAIN OR BUILDING SEWER SHALL NOT BE LESS THAN 5 FT. APART HORIZONTALLY AND SHALL BE SEPARATED BY UNDISTURBED COMPACT EARTH.
39. WATER PIPE SHALL BE DISINFECTED AS PER CODE.
40. PROVIDE WATER PRESSURE REGULATOR WITH STRAINER IF THE WATER PRESSURE IS MORE THAN 80 PSI.
41. PIPE PENETRATING A FIRE RATED WALL OR FLOOR SHALL BE SEALED WITH THE FIRESTOP SEALANT.
42. CONTRACTOR SHALL DESIGN AND PROVIDE THE FIRE SPRINKLER SYSTEM IN ACCORDANCE WITH NFPA 13. PROVIDE DRY SYSTEM WHERE PIPE IS SUBJECT TO FREEZE.
43. CONTRACTOR SHALL PROVIDE THERMAL EXPANSION TANK AT THE DOWNSTREAM OF SHUT-OFF VALVE OF THE INLET OF WATER HEATER.
44. HORIZONTAL DRAINAGE PIPING SHOULD BE INSTALLED AT A UNIFORM SLOPE. 3" DIAMETER AND SMALLER PIPE SHALL BE INSTALLED WITH A FALL OF NOT LESS THAN 1/4 INCH PER FOOT. 3" DIAMETER AND LARGER PIPE SHALL BE INSTALLED WITH A FALL OF NOT LESS THAN 1/8 INCH PER FOOT. CONTRACTOR SHALL VERIFY THE INVERT ELEVATION OF PIPING WITH CIVIL PLAN BEFORE INSTALLING THE PIPE.
45. PROVIDE THE VACUUM BREAKER AT THE FOLLOWING WATER CONNECTION (Section 608.15.4.2):
    - a. HOSE BIBS
    - b. MOP SINK
    - c. SERVICE SINK
46. PROVIDE DOUBLE CHECK FLOW PREVENTER AT THE DOWN STREAM OF METER AND FIRE PROTECTION SYSTEM. SEE SITE PLAN. BACK FLOW PREVENTER SHALL BE INSTALLED AS PER LOCAL AUTHORITIES' REQUIREMENTS.
    - a. Domestic water line and fire sprinkler system-(Type DCVA or RPZA))
47. PROVIDE BACK-FLOW PREVENTER AT THE EQUIPMENT WHICH ARE CONNECTED DIRECTLY TO POTABLE WATER SYSTEM. E.G. COFFEE, ICE, TEA, BEVERAGE MACHINES ETC. AS PER SECTION 608.1 TO 608.17.8
48. CONTRACTOR SHALL NOT CHANGE ANY PIPING LAYOUT WITHOUT WRITTEN PERMISSION.
49. EXPANSION VALVE IS NOT ACCEPTABLE IN LIEU OF EXPANSION TANK.
50. WATER PIPING SHALL NOT BE INSTALLED IN THE ATTIC OR UNHEATED AREA UNLESS OTHERWISE NOTED. IF PIPING IS INSTALLED IN THE ATTIC SPACE, THEN CONTRACTOR SHALL GET APPROVAL FROM THE ENGINEER.
51. CONTRACTOR SHALL NOT INSTALLED ANY PIPING OR FIXTURES WHICH WILL BE IMPEDIMENT TO THE TRAFFIC.
52. DO NOT RUN PIPING OR DUCT-WORK OR LOCATE EQUIPMENT (WITH RESPECT TO SWITCHBOARDS, PANEL BOARDS, POWER PANELS, MOTOR CONTROL CENTERS OR DRY TYPE TRANSFORMERS WITHIN 42" IN FRONT OF EQUIPMENT, OVER EQUIPMENT, OR WITHIN 36" HORIZONTALLY OF SAME SPACE.
53. THIS CONTRACTOR SHALL GIVE ALL ELECTRICAL AND MECHANICAL INFORMATION PERTAINING TO PLUMBING EQUIPMENT TO ELECTRICAL AND MECHANICAL CONTRACTORS BEFORE FINAL CONTRACT SO THAT ELECTRICAL AND MECHANICAL CONTRACTOR INCLUDE IN HIS CONTRACT. CONTRACTOR SHALL NOT PURCHASE ANY EQUIPMENT WITHOUT WRITTEN APPROVAL FROM ELECTRICAL AND STRUCTURAL ENGINEERS AND CONTRACTORS.
54. THERMOSTATICS MIXING VALVE SHALL BE INSTALLED AS PER MANUFACTURER'S INSTRUCTIONS. THIS WILL OVERRIDE ANY DETAILS ON DRAWINGS.
55. ANY PIPE SUBJECT TO FREEZE OR CONDENSATE SHALL BE INSULATED.
56. ALL WATER PIPES SHALL BE IDENTIFIED WITH PIPE MARKER LABEL WHICH INCLUDE THE CONTENTS OF THE PIPING SYSTEM AND ARROW OF FLOW DIRECTION AS PER PLUMBING CODE SECTION 608.8
57. ALL SANITARY AND STORM PIPES SHALL BE IDENTIFIED WITH PIPE MARKER LABEL WHICH INCLUDE THE CONTENTS OF THE PIPING SYSTEM AND ARROW OF FLOW DIRECTION.
58. DRAINAGE OUTLET SHALL BE RODENTPROOF AS PER PLUMBING CODE SECTION 304.
59. ALL SANITARY AND WATER PIPES SHALL BE PROTECTED FROM FREEZING AS PER PLUMBING CODE SECTION 305.6 (6" BELOW FROST LINE AND NOT LESS THAN 12" BELOW GRADE.
60. ALL PIPES SUPPORT SHALL BE PROTECTED FROM WEATHER. (PAINT OR STAINLESS STEEL TO PREVENT CORROSION). See section 308.

ISSUED FOR CONSTRUCTION. DATE: 00 / 00 / 14

REVISIONS

Number	Date:	Remarks:	Number	Date:	Remarks:
X	00-00-00	N/A			

CONSULTANTS

Date Plotted : Nov 24, 2014 - 11:57am
file: 2014-024P-4.DWG

AMEC
ATLANTA MANAGEMENT
AND ENGINEERING
CONSULTANTS, INC.
2081 LULLWATER PLACE, LAWRENCEVILLE, GA. 30043
Tel. (770)-962-3636

**CARTER WATKINS ASSOCIATES
ARCHITECTS, INC.**
POST OFFICE BOX 1004
137 EAST WASHINGTON STREET
MONROE, GEORGIA 30655
Fax: 770/267-1064
email@carterwatkins.com www.carterwatkins.com

SEAL
No. 015330
T. PARIKH

BARTOW COUNTY
FIRE STATION NO. 9
Battalion Headquarters
171 BROWN FARM ROAD, CARTERSVILLE, GEORGIA

SHEET TITLE: PLUMBING NOTES

PRINTED: Nov 24, 2014

NUMBER: P-4

A1	FLUORESCENT LIGHT FIXTURE LITHONIA–2SP–G–3–32–_–A19–120–GEB10IS–DUAL BALLASTS–INPUT–88 WATTS
A2	FLUORESCENT LIGHT FIXTURE LITHONIA–2SP–G–2–32–_–A19–120–GEB10IS INPUT WATTS=59 WATTS
B	FLUORESCENT LIGHT FIXTURE LITHONIA–2SP–G–3–U31–_–A19–120–GEB10IS INPUT WATTS=88 WATTS
C	FLUORESCENT LIGHT FIXTURE LITHONIA–2SP–G–2–U31–_–A19–120–GEB10IS INPUT WATTS=59 WATTS
D	FLUORESCENT LIGHT FIXTURE LITHONIA–2M–4–U31–_–A12–120GEB10RS NOTE*: PROVIDE NIGHT LIGHT FEATURE AS SHOWN ON PLAN INPUT WATTS=113 WATTS
E	4 FT. SURFACE MOUNTED FLUORESCENT WITH LENS – LITHONIA–AW–2–32–_–120–GEB10RS. INPUT WATTS=59 WATTS
F	OUTDOOR LED WALL LIGHT LITHONIA OLLWD – DDB. DARK BRONZE LED WALL CYLINDER DOWNLIGHT INPUT WATTS=9 WATTS
G	UNIVERSAL MOUNT LED COMBINATION EMERGENCY & EXIT SIGN – LITHONIA–ECR LED HO M6 RED, HIGH OUTPUT, 120/277 VOLTS, 3.2 INPUT WATTS
H	FLUORESCENT LIGHT FIXTURE – SURFACE MOUNTED LITHONIA–2M–2–U31–_–A12–120–GEB10RS INPUT WATTS=59 WATTS
H1	FLUORESCENT LIGHT FIXTURE – SURFACE MOUNTED LITHONIA–2M–3–32–_–A19–120–GEB10RS INPUT WATTS=88 WATTS
J	D–SERIES SIZE 2 LED WALL PACK – DARK BRONZE LITHONIA – DSXW2LED 30C 1000 40K–TYPE–T4M– 120V–SF–DDBXD INPUT WATTS=109 WATTS

NOTE: ALL EXTERIOR LIGHTING TO BE ON PHOTO CELL – DUSK TO DAWN. PROVIDE MANUAL OVERRIDE SWITCH IN ELECTRICAL ROOM.

K	FLUORESCENT WET LOCATION FIXTURE LITHONIA–2WRT–G–2–U31–_–A12125–120–GEB10IS INPUT WATTS=59 WATTS
L	FLUORESCENT WET LOCATION FIXTURE LITHONIA–2WRT–G–3–32–_–A12125–120–GEB10IS INPUT WATTS=88 WATTS
M	OUTDOOR WALL LED LIGHT VISA – SEQUENCE 4 FT. LED FIXTURE. #OW5202–LCW650(MVOLT)–BMAT (DIMMABLE) INPUT WATTS=19 WATTS
	LITHOINA–EU2 LEDM12, 120 VOLTS, 1.8 INPUT WATTS.

S	SMOKE DETECTOR
M	CARBON MONOXIDE DETECTOR
R	RATE OF RISE DETECTOR
F	FIXED TEMP. DETECTOR

NOTE: SMOKE DETECTORS AND ALARM SYSTEM

SMOKE DETECTORS SHALL BE LOCATED IN ALL COMMON SPACES, SLEEPING ROOMS, AND CORRIDORS. DETECTORS IN CORRIDORS SHALL BE 15' FROM END OF CORRIDOR AND SPACED 30' THEREAFTER. SMOKE DETECTORS IN SLEEPING ROOMS SHALL BE POWERED BY ELECTRICAL SYSTEM AND HAVE A 1-½" HR. EMERGENCY POWER SOURCE. DETECTORS SHALL INITIATE FIRE ALARM THAT IS AUDIBLE IN SLEEPING AREAS. FIRE ALARM SHOP DRAWINGS, CANDELA RATINGS, AND DEVICE CUT SHEETS SHALL BE SUBMITTED TO THE ARCHITECT'S OFFICE FOR REVIEW AND APPROVAL PRIOR TO INSTALLATION.

NOTE: CEILING TILES IN RESTROOMS AND RESTROOMS WITH SHOWERS TO BE CLEAN ROOM.

NOTES

CONTRCTOR SHALL PROVIDE ELECTRICAL CONNECTION FOR OWNER SUPPLIED ENCODER TO TURN-ON LIGHTS IN FIRE STATION, OPEN OVERHEAD DOORS, TURN-OFF STOVE, CONTROL TRAFIC SIGNAL ON HWY-?, AND CONTROL PA SYSTEM.

1 ALL LIGHT FIXTURES IN THE ROOM TO BE DUAL SWITCHED. ONE SWITCH TO CONTROL TWO OUTSIDE LAMPS AND OTHER SWITCH TO CONTROL HALF OF THE OUTSIDE LAMPS. PROVIDE 2 BALLASTS. (ENERGY CODE REQUIREMENT)

ALL LIGHT FIXTURES EXCEPT SLEEPING AREAS, ELECTRICAL ROOM, AND EMERGENCY LIGHTS SHALL BE OPERATED WITH TIMER AND LIGHTING CONTACTOR WITH OVERIDIE SWITCH OR MOTION DETECTOR IN THE ROOM. IF MOTION DETECTOR IS PROVIDED THAN DUAL SWITCHING IS NOT REQUIRED. (ENERGY CODE REQUIREMENT)

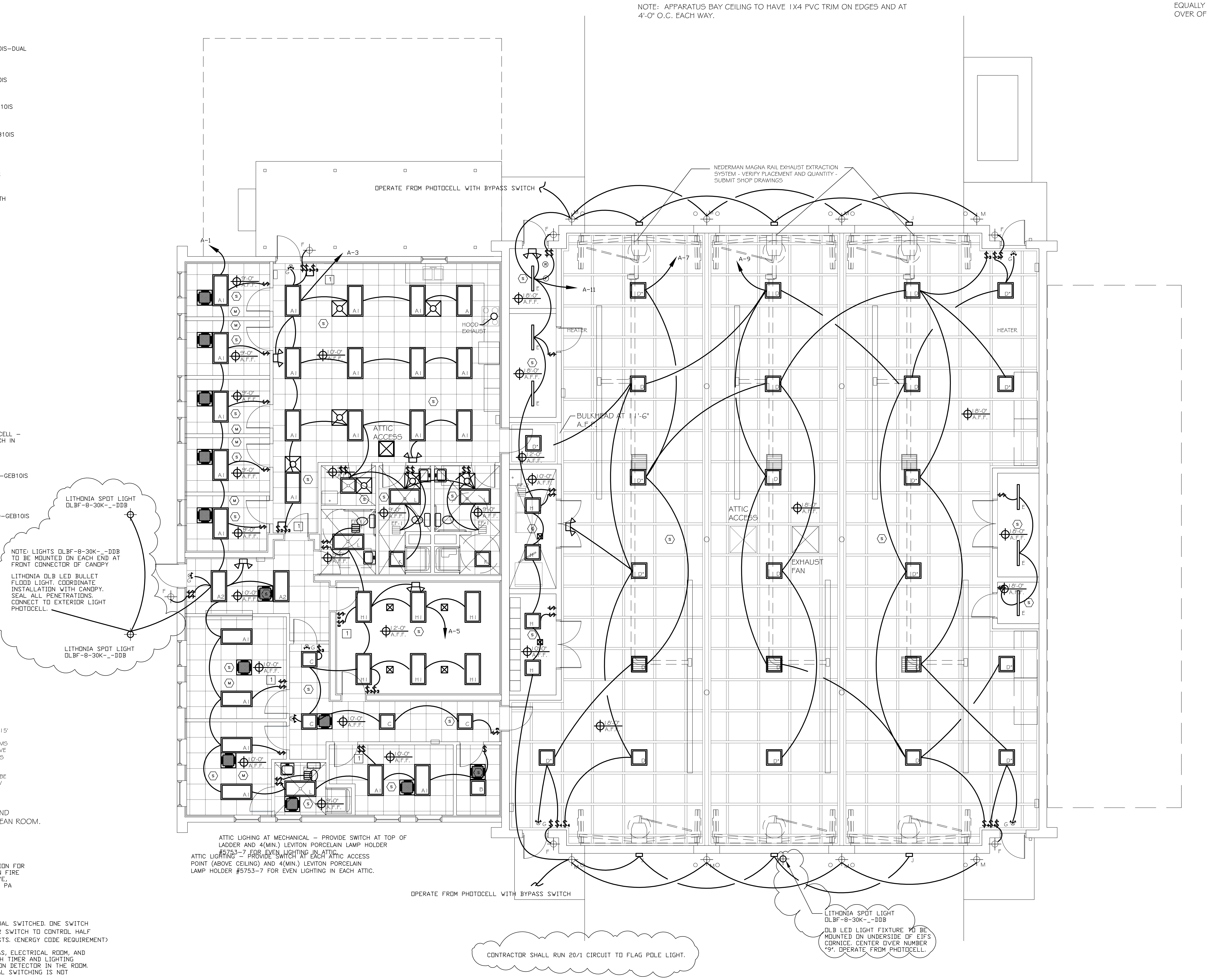
NOTE: APPARATUS BAY CEILING TO HAVE 1X4 PVC TRIM ON EDGES AND AT 4'-0" O.C. EACH WAY.
NOTE: FI
EQUALLY
OVER OF
NEDERMAN MAGNA RAIL EXHAUST EXTRACTION SYSTEM - VERIFY PLACEMENT AND QUANTITY - SUBMIT SHOP DRAWINGS
OPERATE FROM PHOTOCELL WITH BYPASS SWITCH
A-1
A-3
A-5
A-7
A-9
A-11
HOOD EXHAUST
ATTIC ACCESS
BULKHEAD AT 11'-6" A.F.F.
HEATER
EXHAUST FAN
LITHONIA SPOT LIGHT OLBF-8-30K-_-DDB
NOTE: LIGHTS OLBF-8-30K-_-DDB TO BE MOUNTED ON EACH END AT FRONT CONNECTOR OF CANOPY
LITHONIA OLB LED BULLET FLOOD LIGHT. COORDINATE INSTALLATION WITH CANOPY. SEAL ALL PENETRATIONS. CONNECT TO EXTERIOR LIGHT PHOTOCELL.
LITHONIA SPOT LIGHT OLBF-8-30K-_-DDB
ATTIC LIGHING AT MECHANICAL – PROVIDE SWITCH AT TOP OF LADDER AND 4(MIN.) LEVITON PORCELAIN LAMP HOLDER #5753–7 FOR EVEN LIGHTING IN ATTIC.
ATTIC LIGHTING – PROVIDE SWITCH AT EACH ATTIC ACCESS POINT (ABOVE CEILING) AND 4(MIN.) LEVITON PORCELAIN LAMP HOLDER #5753–7 FOR EVEN LIGHTING IN EACH ATTIC.
OPERATE FROM PHOTOCELL WITH BYPASS SWITCH
LITHONIA SPOT LIGHT OLBF-8-30K-_-DDB
OLB LED LIGHT FIXTURE TO BE MOUNTED ON UNDERSIDE OF EIFS CORNICE. CENTER OVER NUMBER "9". OPERATE FROM PHOTOCELL.
CONTRACTOR SHALL RUN 20/1 CIRCUIT TO FLAG POLE LIGHT.

FLOOR PLAN-LIGHT
3/16"=1'-0"

ISSUED FOR CONSTRUCTION. DATE: 00 / 00 / 14

REVISIONS

Number	Date:	Remarks:	Number	Date:	Remarks:
X	00-00-00	N/A			

CONSULTANTS

Date Plotted : Nov 26, 2014 - 9:37am
file: 2014-024E1.DWG

ATLANTA MANAGEMENT AND ENGINEERING CONSULTANTS, INC.
2081 LULLWATER PLACE, LAWRENCEVILLE, GA. 30043
Tel. (770)-962-3636

CARTER WATKINS ASSOCIATES ARCHITECTS, INC.
POST OFFICE BOX 1004
137 EAST WASHINGTON STREET
MONROE, GEORGIA 30655
Fax: 770/267-1064
email@carterwatkins.com www.carterwatkins.com

SEAL

No. 015330
HASMUKH T. PARIKH

BARTOW COUNTY
FIRE STATION NO. 9
Battalion Headquarters
171 BROWN FARM ROAD, CARTERSVILLE, GEORGIA

SHEET TITLE:
FLOOR PLAN
LIGHT

PRINTED: Nov 26, 2014

NUMBER:
E-1

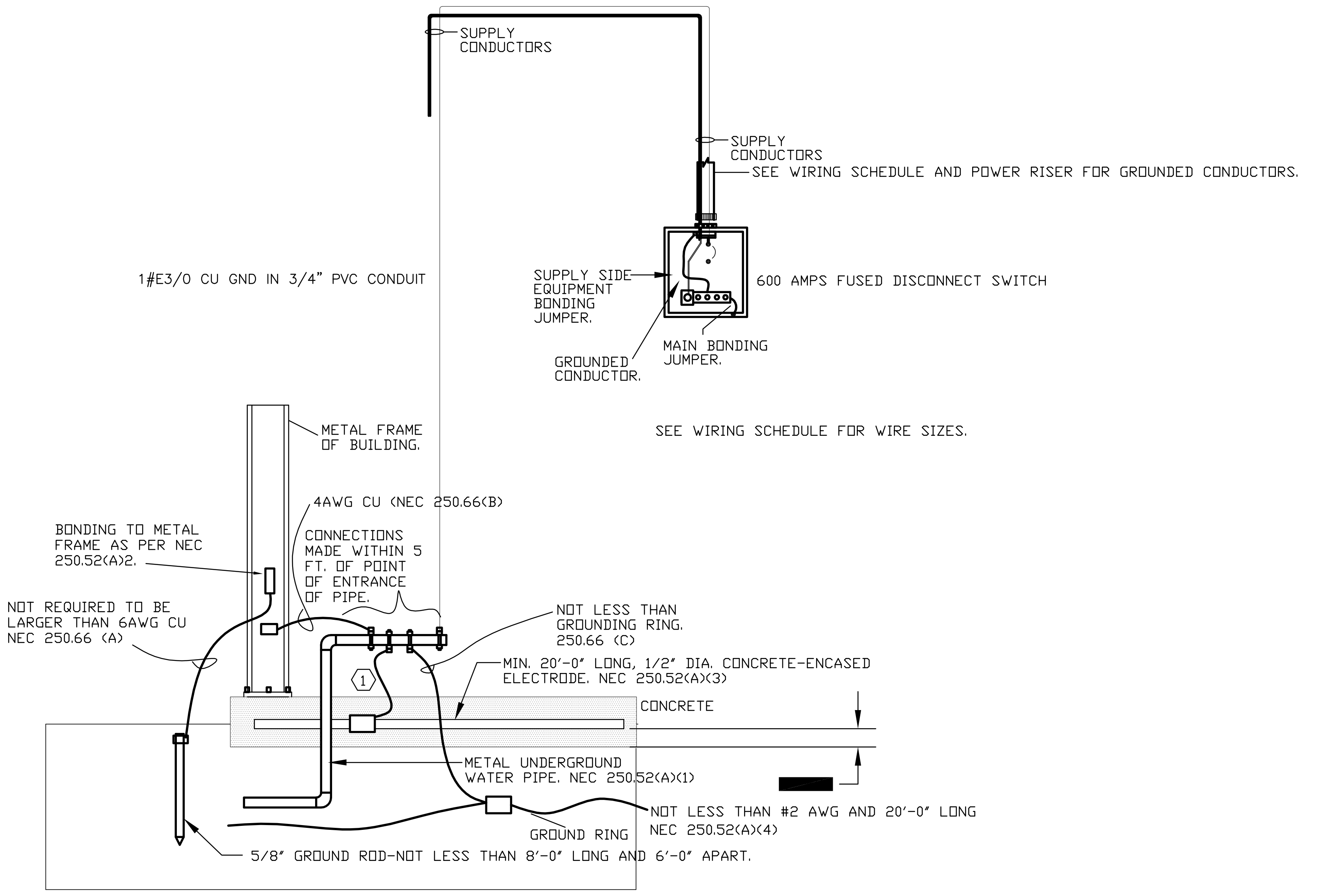
SUPPLY CONDUCTORS
SUPPLY CONDUCTORS
SEE WIRING SCHEDULE AND POWER RISER FOR GROUNDED CONDUCTORS.
1#E3/0 CU GND IN 3/4" PVC CONDUIT
SUPPLY SIDE EQUIPMENT BONDING JUMPER.
600 AMPS FUSED DISCONNECT SWITCH
MAIN BONDING JUMPER.
GROUNDED CONDUCTOR.
SEE WIRING SCHEDULE FOR WIRE SIZES.
METAL FRAME OF BUILDING.
4AWG CU (NEC 250.66(B)
BONDING TO METAL FRAME AS PER NEC 250.52(A)2.
CONNECTIONS MADE WITHIN 5 FT. OF POINT OF ENTRANCE OF PIPE.
NOT REQUIRED TO BE LARGER THAN 6AWG CU NEC 250.66 (A)
NOT LESS THAN GROUNDING RING. 250.66 (C)
1
MIN. 20'-0" LONG, 1/2" DIA. CONCRETE-ENCASED ELECTRODE. NEC 250.52(A)(3)
CONCRETE
METAL UNDERGROUND WATER PIPE. NEC 250.52(A)(1)
NOT LESS THAN #2 AWG AND 20'-0" LONG NEC 250.52(A)(4)
GROUND RING
5/8" GROUND ROD-NOT LESS THAN 8'-0" LONG AND 6'-0" APART.

GROUNDING ELECTRODE SYSTEM

NTS

(1) NOT RQUIRED TO BE LARGER THAN 4AWG CU. NEC250.66

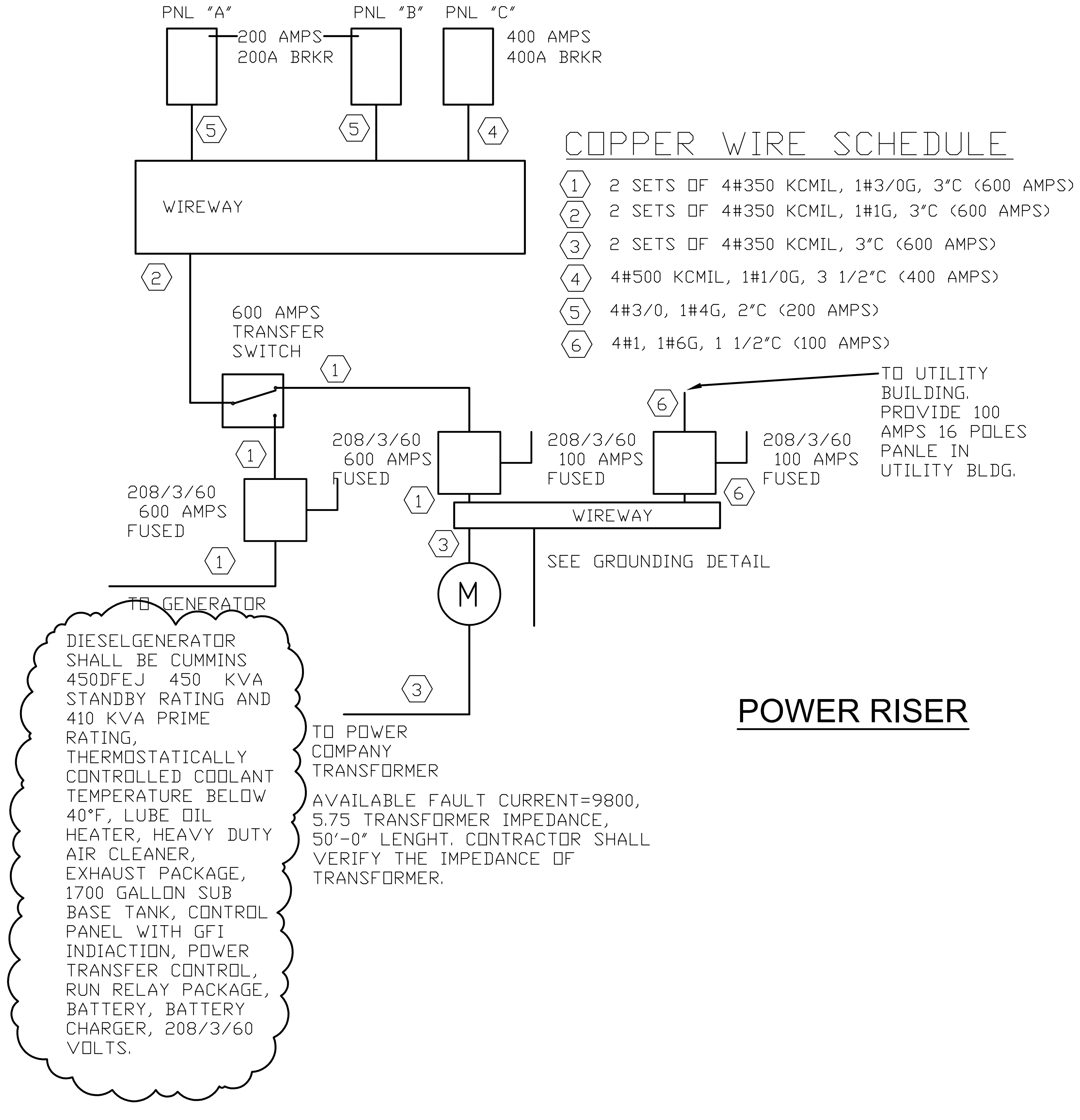
PNL "A"
PNL "B"
PNL "C"
200 AMPS
200A BRKR
400 AMPS
400A BRKR
5
5
4
WIREWAY
2
600 AMPS TRANSFER SWITCH
1
1
208/3/60 600 AMPS FUSED
208/3/60 600 AMPS FUSED
208/3/60 100 AMPS FUSED
208/3/60 100 AMPS FUSED
1
6
6
TO UTILITY BUILDING. PROVIDE 100 AMPS 16 POLES PANLE IN UTILITY BLDG.
WIREWAY
3
M
SEE GROUNDING DETAIL
1
TO GENERATOR
3
TO POWER COMPANY TRANSFORMER

COPPER WIRE SCHEDULE

(1) 2 SETS OF 4#350 KCMIL, 1#3/0G, 3"C (600 AMPS)
(2) 2 SETS OF 4#350 KCMIL, 1#1G, 3"C (600 AMPS)
(3) 2 SETS OF 4#350 KCMIL, 3"C (600 AMPS)
(4) 4#500 KCMIL, 1#1/0G, 3 1/2"C (400 AMPS)
(5) 4#3/0, 1#4G, 2"C (200 AMPS)
(6) 4#1, 1#6G, 1 1/2"C (100 AMPS)

DIESELGENERATOR SHALL BE CUMMINS 450DFEJ 450 KVA STANDBY RATING AND 410 KVA PRIME RATING, THERMOSTATICALLY CONTROLLED COOLANT TEMPERATURE BELOW 40°F, LUBE OIL HEATER, HEAVY DUTY AIR CLEANER, EXHAUST PACKAGE, 1700 GALLON SUB BASE TANK, CONTROL PANEL WITH GFI INDIACTION, POWER TRANSFER CONTROL, RUN RELAY PACKAGE, BATTERY, BATTERY CHARGER, 208/3/60 VOLTS.

AVAILABLE FAULT CURRENT=9800, 5.75 TRANSFORMER IMPEDANCE, 50'-0" LENGHT. CONTRACTOR SHALL VERIFY THE IMPEDANCE OF TRANSFORMER.

POWER RISER

COPPER WIRING SCHEDULE

BREAKER SIZE	WIRING SIZE	DISCONNECT SIZE
20/1	2#12,1#12G, 1/2"C	30/2/NF
20/2	3#12,1#12G, 1/2"C	30/2/NF
20/3	3#12,1#12G, 1/2"C	30/3/NF
30/1	2#10,1#10G, 1/2"C	30/2/NF
30/2	3#10,1#10G, 1/2"C	30/2/NF
30/3	3#10,1#10G, 1/2"C	30/3/NF
40/1	2#8,1#10G, 3/4"C	60/2/NF
40/2	3#8,1#10G, 3/4"C	60/2/NF
40/3	3#8,1#10G, 3/4"C	60/3/NF
50/1	2#6,1#10G, 3/4"C	60/2/NF
50/2	3#6,1#10G, 3/4"C	60/2/NF
50/3	3#6,1#10G, 3/4"C	60/3/NF
60/1	2#4,1#10G, 1"C	60/2/NF
60/2	3#4,1#10G, 1"C	60/2/NF
60/3	3#4,1#10G, 1"C	60/3/NF

PANEL "A" SCHEDULE

MAIN: 200 MB			VOLTAGE			208		3Ø		WIRES: 4			MOUNTING: SURFACE							AIC: 10,000		
CKT#	BRKR	DESCRIPTION	LTG	REC	MTR	A/C	HTG	KIT	MISC	A	B	C	LTG	REC	MTR	A/C	HTG	KIT	MISC	DESCRIPTION	BRKR	CKT#
1	20/1	LIGHTS-BED RM	1.4	0.0	0.0	0.0	0	0.0	0.0	3.0			0.0	1.6	0.0	0.0	0.0	0.0	0	REC-BED RM **	20/1	2
3		LIGHTS-DAY RM	1.8	0	0	0	0	0	0		3.4		0	1.6	0	0	0	0	0	REC-BED RM **		4
5		LIGHTS-TRAINING	0.8	0	0	0	0	0	0			1.6	0	0.8	0	0	0	0	0	REC-BED RM **		6
7		LIGHTS-APPRATUS	1.4	0	0	0	0	0	0	2.2			0	0.8	0	0	0	0	0	REC-KITCHEN		8
9		LIGHTS-APPRATUR	1.6	0	0	0	0	0	0		2.0		0	0	0.4	0	0	0	0	REC-GARBAGE DIS.		10
11		LIGHTS-OUTSIDE	1.2	0	0	0	0	0	0			1.5	0	0	0.3	0	0	0	0	DISHWASHER		12
13		REC.-BATTALON	0	1.6	0	0	0	0	0	2.8			0	1.2	0	0	0	0	0	REC.-FLOOR		14
15		REC-BED RM **	0	1.2	0	0	0	0	0		1.6		0	0.4	0	0	0	0	0	REC.-TV		16
17		REC. REST RM	0	0.4	0	0	0	0	0			4.4	0	0	0	0	0	0.0	4.0	ELECTRIC RANGE	50/2	18
19		REC.-REST RM	0	0.4	0	0	0	0	0	4.4			0	0	0	0	0	0.0	4.0			20
21		REC. CAPTAIN	0	1.6	0	0	0	0	0		2.0		0	0	0.4	0	0	0	0	KITCHEN HOOD	20/1	22
23		REC. SERVER	0	1.6	0	0	0	0	0			2.0	0	0.4	0	0	0	0	0	REC.-KITCHEN		24
25	20/1	REC-OUTDOOR	0	0.4	0	0	0	0	0	1.2			0	0.8	0	0	0	0	0	REC.-FRIG		26
27			0	0.4	0	0	0	0	0		1.2		0	0.8	0	0	0	0	0	REC.-PANTRY		28
29			0	0.4	0	0	0	0	0			2.0	0	1.6	0	0	0	0	0	REC.-DAY RM		30
31			0	0.4	0	0	0	0	0	0.8			0	0.4	0	0	0	0	0	REC.-HC REST RM		32
33			0	0.4	0	0	0	0	0		0.8		0	0.4	0	0	0	0	0	REC.-JAN		34
35			0	0.4	0	0	0	0	0			0.8	0	0.4	0	0	0	0	0	REC-HC REST RM		36
37		BOTTLE COOLER	0	0.4	0	0	0	0	0	1.0			0	0.6	0	0	0	0	0	REC.-LOBBY/CORR.		38
39		SPARE	0	0	0	0	0	0	0		1.6		0	1.6	0	0	0	0	0	REC-TRAINING		40
41			0	0	0	0	0	0	0			1.2	0	1.2	0	0	0	0	0	REC.-SP SYSTEM		42
			8.2	9.6	0.0	0.0	0.0	0.0	0.0				0.0	14.6	1.1	0.0	0.0	0.0	8.0			
RECEPTACLES		24.2																		CONNECTED LOAD		41.5
MOTORS		1.1						KVA		15.4	12.6	13.5								DEMAND LOAD		34.4
A/C		0.0						AMPS		128.3	105.0	112.5										
HEATING		0.0																		CONNECTED AMPS		115.3
KITCHEN		0.0																		DEMAND AMPS		95.6
MISC.		8.0																				
LIGHTING		8.2																		AMPACITY REQUIRED		102.1

NOTES: * HACR BREAKER **ARC FAULT BREAKER *** SHUNT BREAKER **** TIMER **** GFI BREAKER

PANEL "B" SCHEDULE

MAIN: 200 MBO.			VOLTAGE			208		3Ø		WIRES: 4			MOUNTING: SURFACE							AIC: 10,000		
CKT#	BRKR	DESCRIPTION	LTG	REC	MTR	A/C	HTG	KIT	MISC	A	B	C	LTG	REC	MTR	A/C	HTG	KIT	MISC	DESCRIPTION	BRKR	CKT#
1	20/1	REC.-ELECTRICAL	0.0	0.4	0.0	0.0	0	0.0	0.0	2.0			0.0	0.0	1.6	0.0	0.0	0.0	0	REC-NEDERMAN	20/1	2
3	20/1	RECIRCULAT PUMP	0	0	0.90	0	0	0	0		2.5		0	1.6	0	0	0	0	0	SHORE RECEP		4
5	20/1	SPARE	0	0	0	0	0	0	0			1.6	0	1.6	0	0	0	0	0			6
7	20/1	REC-MECH	0	0.4	0	0	0	0	0	2.0			0	1.6	0	0	0	0	0			8
9	20/1	REC-LAUNDRAY	0	0.4	0	0	0	0	0		0.4		0	0.0	0	0	0	0	0	SPARE		10
11	50/2	DRYER	0	0	0	0	0	0	2.5			3.7	0	1.2	0	0	0	0	0	REC.-CEILING		12
13			0	0	0	0	0	0	2.5	2.9			0	0.4	0	0	0	0	0	REC.-APP BAY		14
15	20/1	CLOTH WASHER	0	0	0.4	0	0	0	0		0.8		0	0.4	0	0	0	0	0	REC.-SPRINKLER		16
17	30/3	GEAR WASHER	0	0	3.0	0	0	0	0			3.4	0	0.4	0	0	0	0	0	REC. WORKBENCH		18
19			0	0	3.0	0	0	0	0	3.4			0	0.4	0	0	0	0	0	REC. WORKBENCH		20
21			0	0.0	3.0	0	0	0	0		5.0		0	0	2.0	0	0	0	0	SHORE -RECPT.		22
23	20/1	REC.-LOCKER	0	0.4	0	0	0	0	0			2.4	0	0	2.0	0	0	0	0			24
25		SPARE	0	0	2.0	0	0	0	0	4.0			0	0	2.0	0	0	0	0			26
27		SPARE	0	0	2.0	0	0	0	0		3.6		0	0	1.6	0	0	0	0	GARAGE DR OPENER	20/3	28
29		SPARE	0	0	2.0	0	0	0	0			3.6	0	0	1.6	0	0	0	0			30
31	20/1	REC.-APP BAY	0	0.4	0	0	0	0	0	2.0			0	0	1.6	0	0	0	0			32
33	20/3	GARAGE DR OPENER	0	0	1.6	0	0	0	0		1.6		0	0	0	0	0	0	0	SPARE	20/1	34
35			0	0	1.6	0	0	0	0			1.6	0	0	0	0	0	0	0			36
37			0	0	1.6	0	0	0	0	1.6			0	0	0	0	0	0	0			38
39	20/1	REC.-NEDERMAN	0	0	1.6	0	0	0	0		2.0		0	0.4	0	0	0	0	0	REC.-WORK BENCH	20/1	40
41	20/1	REC,-NEDERMAN	0	0	1.6	0	0	0	0			2.0	0	0.4	0	0	0	0	0	REC. WORK BENCH	20/1	42
			0.0	2.0	24.3	0.0	0.0	0.0	5.0				0.0	8.4	12.4	0.0	0.0	0.0	0.0			
RECEPTACLES		10.4																		CONNECTED LOAD		52.1
MOTORS		36.7						KVA		17.9	15.9	18.3								DEMAND LOAD		51.9
A/C		0.0						AMPS		149.2	132.5	152.5										
HEATING		0.0																		CONNECTED AMPS		144.8
KITCHEN		0.0																		DEMAND AMPS		144.2
MISC.		5.0																				
LIGHTING		0.0																		AMPACITY REQUIRED		144.2

NOTES: * HACR BREAKER **ARC FAULT BREAKER *** SHUNT BREAKER **** TIMER **** GFI BREAKER

PANEL "C" SCHEDULE

MAIN: 400 MB			VOLTAGE			208		3Ø		WIRES: 4			MOUNTING: ?							AIC: 10,000		
CKT#	BRKR	DESCRIPTION	LTG	REC	MTR	A/C	HTG	KIT	MISC	A	B	C	LTG	REC	MTR	A/C	HTG	KIT	MISC	DESCRIPTION	BRKR	CKT#
1	15/2	AU-1	0.0	0.0	0.0	0.50	0	0.0	0.0	2.5			0.0	0.0	2.0	0.0	0.0	0.0	0	EF-3	30/3	2
3			0	0	0	0.50	0	0	0		2.5		0	0	2.0	0	0	0	0			4
5	45/2	AU-2	0	0	0	4.1	0	0	0			6.1	0	0	2.0	0	0	0	0			6
7			0	0	0	4.1	0	0	0	4.1			0	0	0	0	0	0	0	SPARE	20/1	8
9	45/2	AU-3	0	0	0	4.1	0	0	0		4.1		0	0	0	0	0	0	0			10
11			0	0	0	4.1	0	0	0			4.1	0	0	0	0	0	0	0			12
13	30/3	HP-1 *	0	0	0	2.5	0	0	0	9.3			0	0	0	0	0	0	6.8	WATER HEATER	60/2	14
15			0	0	0	2.5	0	0	0		9.3		0	0	0	0	0	0	6.8			16
17			0	0	0	2.5	0	0	0			9.3	0	0	0	0	0	0	6.8	WATER HEATER	60/2	18
19	30/2	HP-2 *	0	0	0	1.7	0	0	0	8.5			0	0	0	0	0	0	6.8			20
21			0	0	0	1.7	0	0	0		8.5		0	0	0	0	0	0	6.8	WATER HEATER	60/2	22
23	30/2	HP-3 *	0	0	0	1.7	0	0	0			8.5	0	0	0	0	0	0	6.8			24
25			0	0	0	1.7	0	0	0	8.5			0	0	0	0	0	0	6.8	WATER HEATER	60/2	26
27	20/1	UH	0	0	0	0.7	0	0	0		7.5		0	0	0	0	0	0	6.8			28
29	20/1	UH	0	0	0	0.7	0	0	0			2.7	0	0	2.0	0	0	0	0	AIR COMPRESSOR	30/3	30
31	20/1	UH	0	0	0	0.7	0	0	0	2.7			0	0	2.0	0	0	0	0			32
33	20/1	UH	0	0	0	0.7	0	0	0		2.7		0	0	2.0	0	0	0	0			34
35	30/3	AIR COMPRESSOR	0	0	2.0	0	0	0	0			4.0	0	0	2.0	0	0	0	0	AIR COMPRESSOR	30/3	36
37			0	0	2.0	0	0	0	0	4.0			0	0	2.0	0	0	0	0			38
39			0	0	2.0	0	0	0	0		4.0		0	0	2.0	0	0	0	0			40
41			0	0	0	0	0	0	0			0.0	0	0	0	0	0	0	0			42
			0.0	0.0	6.0	34.5	0.0	0.0	0.0				0.0	0.0	18.0	0.0	0.0	0.0	54.4			
RECEPTACLES		0.0																		CONNECTED LOAD		112.9
MOTORS		24.0						KVA		39.6	38.6	34.7								DEMAND LOAD		117.9
A/C		34.5						AMPS		330.0	321.7	289.2										
HEATING		0.0																		CONNECTED AMPS		313.8
KITCHEN		0.0																		DEMAND AMPS		327.6
MISC.		54.4																				
LIGHTING		0.0																		AMPACITY REQUIRED		368.3

NOTES: * HACR BREAKER **ARC FAULT BREAKER *** SHUNT BREAKER **** TIMER **** GFI BREAKER

REVISIONS

Number	Date:	Remarks:	Number	Date:	Remarks:
X	05-15-2015	N/A			

CONSULTANTS

Date Plotted : Jul 17, 2015 - 1:28pm
file: 2014-024E2-112014R.DWG

AMEC
ATLANTA MANAGEMENT
AND ENGINEERING
CONSULTANTS, INC.
2081 LULLWATER PLACE, LAWRENCEVILLE, GA. 30043
Tel. (770)-962-3636

CARTER WATKINS ASSOCIATES ARCHITECTS, INC.
POST OFFICE BOX 1004
137 EAST WASHINGTON STREET
MONROE, GEORGIA 30655
Fax: 770/267-1064
email@carterwatkins.com www.carterwatkins.com

SEAL

No. 015330
T. PARIKH

BARTOW COUNTY
FIRE STATION NO. 9
Battalion Headquarters
171 BROWN FARM ROAD, CARTERSVILLE, GEORGIA

SHEET TITLE: PANELS SCHEDULE, POWER RISER, AND WIRING SCHEDULE

PRINTED: Jul 17, 2015

NUMBER: E-3

ISSUED FOR CONSTRUCTION. DATE: 05/15/2015

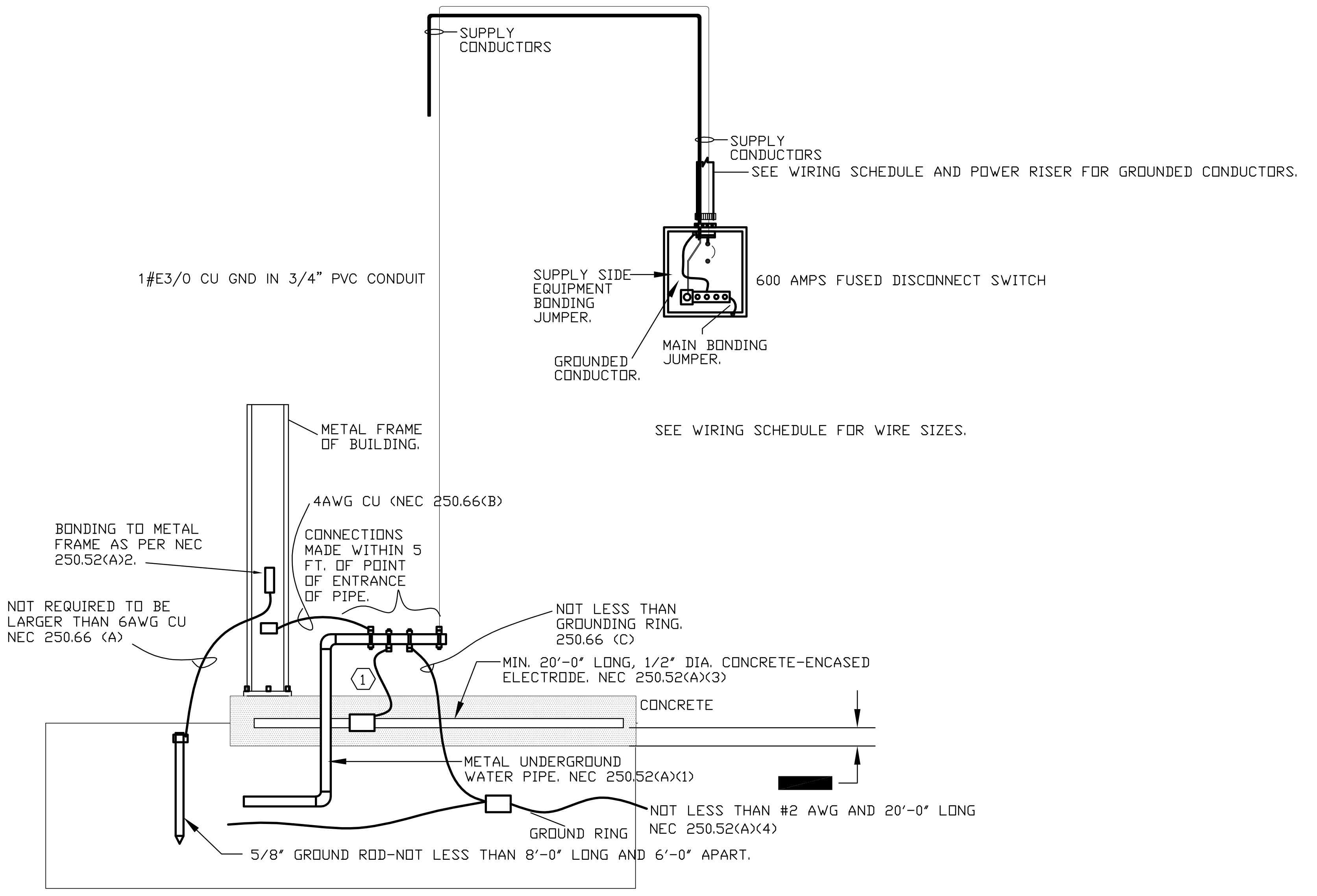
SUPPLY CONDUCTORS
SUPPLY CONDUCTORS
SEE WIRING SCHEDULE AND POWER RISER FOR GROUNDED CONDUCTORS.
1#E3/0 CU GND IN 3/4" PVC CONDUIT
SUPPLY SIDE EQUIPMENT BONDING JUMPER.
600 AMPS FUSED DISCONNECT SWITCH
GROUNDED CONDUCTOR.
MAIN BONDING JUMPER.
METAL FRAME OF BUILDING.
SEE WIRING SCHEDULE FOR WIRE SIZES.
4AWG CU (NEC 250.66(B)
BONDING TO METAL FRAME AS PER NEC 250.52(A)2.
CONNECTIONS MADE WITHIN 5 FT. OF POINT OF ENTRANCE OF PIPE.
NOT REQUIRED TO BE LARGER THAN 6AWG CU NEC 250.66 (A)
NOT LESS THAN GROUNDING RING. 250.66 (C)
1
MIN. 20'-0" LONG, 1/2" DIA. CONCRETE-ENCASED ELECTRODE. NEC 250.52(A)(3)
CONCRETE
METAL UNDERGROUND WATER PIPE. NEC 250.52(A)(1)
NOT LESS THAN #2 AWG AND 20'-0" LONG NEC 250.52(A)(4)
GROUND RING
5/8" GROUND ROD-NOT LESS THAN 8'-0" LONG AND 6'-0" APART.

GROUNDING ELECTRODE SYSTEM
NTS

〈1〉 NOT RQUIRED TO BE LARGER THAN 4AWG CU.
NEC250.66

COPPER WIRING SCHEDULE

BREAKER SIZE	WIRING SIZE	DISCONNECT SIZE
20/1	2#12,1#12G, 1/2"C	30/2/NF
20/2	3#12,1#12G, 1/2"C	30/2/NF
20/3	3#12,1#12G, 1/2"C	30/3/NF
30/1	2#10,1#10G, 1/2"C	30/2/NF
30/2	3#10,1#10G, 1/2"C	30/2/NF
30/3	3#10,1#10G, 1/2"C	30/3/NF
40/1	2#8,1#10G, 3/4"C	60/2/NF
40/2	3#8,1#10G, 3/4"C	60/2/NF
40/3	3#8,1#10G, 3/4"C	60/3/NF
50/1	2#6,1#10G, 3/4"C	60/2/NF
50/2	3#6,1#10G, 3/4"C	60/2/NF
50/3	3#6,1#10G, 3/4"C	60/3/NF
60/1	2#4,1#10G, 1"C	60/2/NF
60/2	3#4,1#10G, 1"C	60/2/NF
60/3	3#4,1#10G, 1"C	60/3/NF

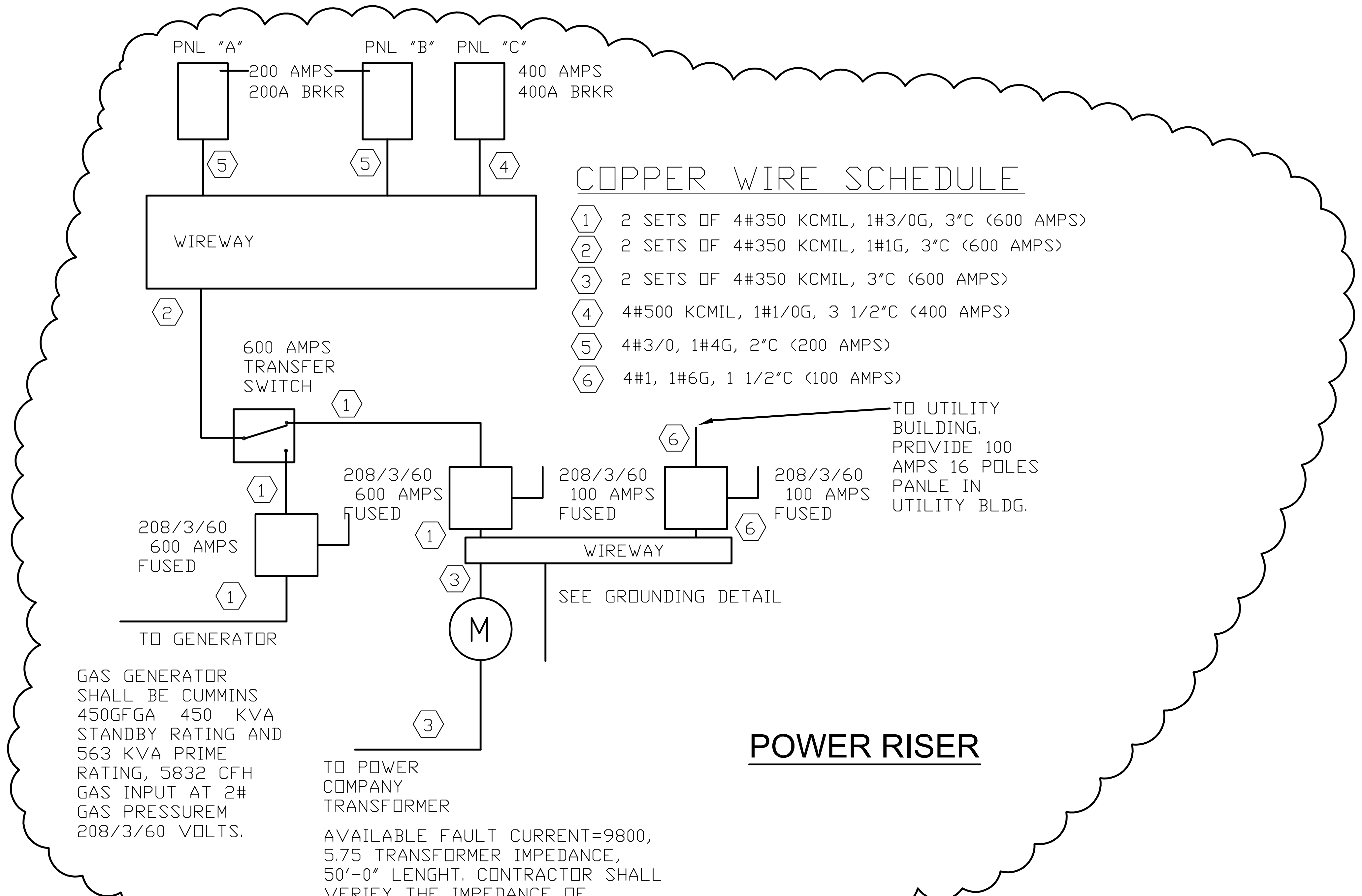
PNL "A"
PNL "B"
PNL "C"
200 AMPS
200A BRKR
400 AMPS
400A BRKR
5
5
4
WIREWAY
2
600 AMPS TRANSFER SWITCH
1
1
208/3/60 600 AMPS FUSED
1
208/3/60 600 AMPS FUSED
1
208/3/60 100 AMPS FUSED
6
208/3/60 100 AMPS FUSED
6
TO UTILITY BUILDING. PROVIDE 100 AMPS 16 POLES PANLE IN UTILITY BLDG.
WIREWAY
3
M
SEE GROUNDING DETAIL
TO GENERATOR
3
TO POWER COMPANY TRANSFORMER

COPPER WIRE SCHEDULE

1. 2 SETS OF 4#350 KCMIL, 1#3/0G, 3"C (600 AMPS)
2. 2 SETS OF 4#350 KCMIL, 1#1G, 3"C (600 AMPS)
3. 2 SETS OF 4#350 KCMIL, 3"C (600 AMPS)
4. 4#500 KCMIL, 1#1/0G, 3 1/2"C (400 AMPS)
5. 4#3/0, 1#4G, 2"C (200 AMPS)
6. 4#1, 1#6G, 1 1/2"C (100 AMPS)

GAS GENERATOR SHALL BE CUMMINS 450GFGA 450 KVA STANDBY RATING AND 563 KVA PRIME RATING, 5832 CFH GAS INPUT AT 2# GAS PRESSUREM 208/3/60 VOLTS.

AVAILABLE FAULT CURRENT=9800, 5.75 TRANSFORMER IMPEDANCE, 50'-0" LENGHT. CONTRACTOR SHALL VERIFY THE IMPEDANCE OF TRANSFORMER.

POWER RISER

PANEL "A" SCHEDULE

MAIN: 200 MB			VOLTAGE			208		3Ø		WIRES: 4				MOUNTING: SURFACE						AIC: 10,000		
CKT#	BRKR	DESCRIPTION	LTG	REC	MTR	A/C	HTG	KIT	MISC	A	B	C	LTG	REC	MTR	A/C	HTG	KIT	MISC	DESCRIPTION	BRKR	CKT#
1	20/1	LIGHTS-BED RM	1.4	0.0	0.0	0.0	0	0.0	0.0	3.0			0.0	1.6	0.0	0.0	0.0	0.0	0	REC-BED RM **	20/1	2
3		LIGHTS-DAY RM	1.8	0	0	0	0	0	0		3.4		0	1.6	0	0	0	0	0	REC-BED RM **		4
5		LIGHTS-TRAINING	0.8	0	0	0	0	0	0			1.6	0	0.8	0	0	0	0	0	REC-BED RM **		6
7		LIGHTS-APPRATUS	1.4	0	0	0	0	0	0	2.2			0	0.8	0	0	0	0	0	REC-KITCHEN		8
9		LIGHTS-APPRATUR	1.6	0	0	0	0	0	0		2.0		0	0	0.4	0	0	0	0	REC-GARBAGE DIS.		10
11		LIGHTS-OUTSIDE	1.2	0	0	0	0	0	0			1.5	0	0	0.3	0	0	0	0	DISHWASHER		12
13		REC.-BATTALON	0	1.6	0	0	0	0	0	2.8			0	1.2	0	0	0	0	0	REC.-FLOOR		14
15		REC-BED RM **	0	1.2	0	0	0	0	0		1.6		0	0.4	0	0	0	0	0	REC.-TV		16
17		REC. REST RM	0	0.4	0	0	0	0	0			4.4	0	0	0	0	0	0.0	4.0	ELECTRIC RANGE	50/2	18
19		REC.-REST RM	0	0.4	0	0	0	0	0	4.4			0	0	0	0	0	0.0	4.0			20
21		REC. CAPTAIN	0	1.6	0	0	0	0	0		2.0		0	0	0.4	0	0	0	0	KITCHEN HOOD	20/1	22
23		REC. SERVER	0	1.6	0	0	0	0	0			2.0	0	0.4	0	0	0	0	0	REC.-KITCHEN		24
25	20/1	REC-OUTDOOR	0	0.4	0	0	0	0	0	1.2			0	0.8	0	0	0	0	0	REC.-FRIG		26
27			0	0.4	0	0	0	0	0		1.2		0	0.8	0	0	0	0	0	REC.-PANTRY		28
29			0	0.4	0	0	0	0	0			2.0	0	1.6	0	0	0	0	0	REC.-DAY RM		30
31			0	0.4	0	0	0	0	0	0.8			0	0.4	0	0	0	0	0	REC.-HC REST RM		32
33			0	0.4	0	0	0	0	0		0.8		0	0.4	0	0	0	0	0	REC.-JAN		34
35			0	0.4	0	0	0	0	0			0.8	0	0.4	0	0	0	0	0	REC-HC REST RM		36
37		BOTTLE COOLER	0	0.4	0	0	0	0	0	1.0			0	0.6	0	0	0	0	0	REC.-LOBBY/CORR.		38
39		SPARE	0	0	0	0	0	0	0		1.6		0	1.6	0	0	0	0	0	REC-TRAINING		40
41			0	0	0	0	0	0	0			1.2	0	1.2	0	0	0	0	0	REC.-SP SYSTEM		42
			8.2	9.6	0.0	0.0	0.0	0.0	0.0				0.0	14.6	1.1	0.0	0.0	0.0	8.0			
RECEPTACLES		24.2																		CONNECTED LOAD		41.5
MOTORS		1.1						KVA		15.4	12.6	13.5								DEMAND LOAD		34.4
A/C		0.0						AMPS		128.3	105.0	112.5										
HEATING		0.0																		CONNECTED AMPS		115.3
KITCHEN		0.0																		DEMAND AMPS		95.6
MISC.		8.0																				
LIGHTING		8.2																		AMPACITY REQUIRED		102.1

NOTES: * HACR BREAKER **ARC FAULT BREAKER *** SHUNT BREAKER **** TIMER **** GFI BREAKER

PANEL "B" SCHEDULE

MAIN: 200 MBO.			VOLTAGE			208		3Ø		WIRES: 4				MOUNTING: SURFACE						AIC: 10,000		
CKT#	BRKR	DESCRIPTION	LTG	REC	MTR	A/C	HTG	KIT	MISC	A	B	C	LTG	REC	MTR	A/C	HTG	KIT	MISC	DESCRIPTION	BRKR	CKT#
1	20/1	REC.-ELECTRICAL	0.0	0.4	0.0	0.0	0	0.0	0.0	2.0			0.0	0.0	1.6	0.0	0.0	0.0	0	REC-NEDERMAN	20/1	2
3	20/1	RECIRCULAT PUMP	0	0	0.90	0	0	0	0		2.9		0	0	2.0	0	0	0	0	AIR COMPRESSOR	30/3	4
5	20/1	SPARE	0	0	0	0	0	0	0			2.0	0	0	2.0	0	0	0	0			6
7	20/1	REC-MECH	0	0.4	0	0	0	0	0	2.4			0	0.0	2.0	0	0	0	0			8
9	20/1	REC-LAUNDRAY	0	0.4	0	0	0	0	0		0.4		0	0.0	0	0	0	0	0	SPARE	20/1	10
11	50/2	DRYER	0	0	0	0	0	0	2.5			3.7	0	1.2	0	0	0	0	0	REC.-CEILING		12
13			0	0	0	0	0	0	2.5	2.9			0	0.4	0	0	0	0	0	REC.-APP BAY		14
15	20/1	CLOTH WASHER	0	0	0.4	0	0	0	0		0.8		0	0.4	0	0	0	0	0	REC.-SPRINKLER		16
17	30/3	GEAR WASHER	0	0	3.0	0	0	0	0			3.4	0	0.4	0	0	0	0	0	REC. WORKBENCH		18
19			0	0	3.0	0	0	0	0	3.4			0	0.4	0	0	0	0	0	REC. WORKBENCH		20
21			0	0.0	3.0	0	0	0	0		5.0		0	0	2.0	0	0	0	0	AIR COMPRESSOR	30/3	22
23	20/1	REC.-LOCKER	0	0.4	0	0	0	0	0			2.4	0	0	2.0	0	0	0	0			24
25	30/3	AIR COMP. 5 HP	0	0	2.0	0	0	0	0	4.0			0	0	2.0	0	0	0	0			26
27			0	0	2.0	0	0	0	0		3.6		0	0	1.6	0	0	0	0	GARAGE DR OPENER	20/3	28
29			0	0	2.0	0	0	0	0			3.6	0	0	1.6	0	0	0	0			30
31	20/1	REC.-APP BAY	0	0.4	0	0	0	0	0	2.0			0	0	1.6	0	0	0	0			32
33	20/3	GARAGE DR OPENER	0	0	1.6	0	0	0	0		1.6		0	0	0	0	0	0	0	SPARE	20/1	34
35			0	0	1.6	0	0	0	0			1.6	0	0	0	0	0	0	0			36
37			0	0	1.6	0	0	0	0	1.6			0	0	0	0	0	0	0			38
39	20/1	REC.-NEDERMAN	0	0	1.6	0	0	0	0		2.0		0	0.4	0	0	0	0	0	REC.-WORK BENCH	20/1	40
41	20/1	REC,-NEDERMAN	0	0	1.6	0	0	0	0			2.0	0	0.4	0	0	0	0	0	REC. WORK BENCH	20/1	42
			0.0	2.0	24.3	0.0	0.0	0.0	5.0				0.0	3.6	18.4	0.0	0.0	0.0	0.0			
RECEPTACLES		5.6																		CONNECTED LOAD		53.3
MOTORS		42.7						KVA		18.3	16.3	18.7								DEMAND LOAD		55.5
A/C		0.0						AMPS		152.5	135.8	155.8										
HEATING		0.0																		CONNECTED AMPS		148.1
KITCHEN		0.0																		DEMAND AMPS		154.2
MISC.		5.0																				
LIGHTING		0.0																		AMPACITY REQUIRED		154.2

NOTES: * HACR BREAKER **ARC FAULT BREAKER *** SHUNT BREAKER **** TIMER **** GFI BREAKER

PANEL "C" SCHEDULE

MAIN: 400 MB			VOLTAGE			208		3Ø		WIRES: 4				MOUNTING: ?						AIC: 10,000		
CKT#	BRKR	DESCRIPTION	LTG	REC	MTR	A/C	HTG	KIT	MISC	A	B	C	LTG	REC	MTR	A/C	HTG	KIT	MISC	DESCRIPTION	BRKR	CKT#
1	15/2	AU-1	0.0	0.0	0.0	0.50	0	0.0	0.0	2.5			0.0	0.0	2.0	0.0	0.0	0.0	0	EF-3	30/3	2
3			0	0	0	0.50	0	0	0		2.5		0	0	2.0	0	0	0	0			4
5	45/2	AU-2	0	0	0	4.1	0	0	0			6.1	0	0	2.0	0	0	0	0			6
7			0	0	0	4.1	0	0	0	4.1			0	0	0	0	0	0	0	SPARE	20/1	8
9	45/2	AU-3	0	0	0	4.1	0	0	0		4.1		0	0	0	0	0	0	0			10
11			0	0	0	4.1	0	0	0			4.1	0	0	0	0	0	0	0			12
13	30/3	HP-1 *	0	0	0	2.5	0	0	0	9.3			0	0	0	0	0	0	6.8	WATER HEATER	60/2	14
15			0	0	0	2.5	0	0	0		9.3		0	0	0	0	0	0	6.8			16
17			0	0	0	2.5	0	0	0			9.3	0	0	0	0	0	0	6.8	WATER HEATER	60/2	18
19	30/2	HP-2 *	0	0	0	1.7	0	0	0	8.5			0	0	0	0	0	0	6.8			20
21			0	0	0	1.7	0	0	0		8.5		0	0	0	0	0	0	6.8	WATER HEATER	60/2	22
23	30/2	HP-3 *	0	0	0	1.7	0	0	0			8.5	0	0	0	0	0	0	6.8			24
25			0	0	0	1.7	0	0	0	8.5			0	0	0	0	0	0	6.8	WATER HEATER	60/2	26
27	20/1	UH	0	0	0	0.7	0	0	0		7.5		0	0	0	0	0	0	6.8			28
29	20/1	UH	0	0	0	0.7	0	0	0			0.7	0	0	0	0	0	0	0			30
31	20/1	UH	0	0	0	0.7	0	0	0	0.7			0	0	0	0	0	0	0			32
33	20/1	UH	0	0	0	0.7	0	0	0		0.7		0	0	0	0	0	0	0			34
35			0	0	0	0	0	0	0			0.0	0	0	0	0	0	0	0			36
37			0	0	0	0	0	0	0	0.0			0	0	0	0	0	0	0			38
39			0	0	0	0	0	0	0		0.0		0	0	0	0	0	0	0			40
41			0	0	0	0	0	0	0			0.0	0	0	0	0	0	0	0			42
			0.0	0.0	0.0	34.5	0.0	0.0	0.0				0.0	0.0	6.0	0.0	0.0	0.0	54.4			
RECEPTACLES		0.0																		CONNECTED LOAD		94.9
MOTORS		6.0						KVA		33.6	32.6	28.7								DEMAND LOAD		99.9
A/C		34.5						AMPS		280.0	271.7	239.2										
HEATING		0.0																		CONNECTED AMPS		263.7
KITCHEN		0.0																		DEMAND AMPS		277.6
MISC.		54.4																				
LIGHTING		0.0																		AMPACITY REQUIRED		305.8

NOTES: * HACR BREAKER **ARC FAULT BREAKER *** SHUNT BREAKER **** TIMER **** GFI BREAKER

REVISIONS

Number	Date:	Remarks:	Number	Date:	Remarks:
X	00-00-00	N/A			

CONSULTANTS

Date Plotted : Nov 24, 2014 - 11:45am
file: 2014-024E2-112014R.DWG

AMEC ATLANTA MANAGEMENT AND ENGINEERING CONSULTANTS, INC.
2081 LULLWATER PLACE, LAWRENCEVILLE, GA. 30043
Tel. (770)-962-3636

CARTER WATKINS ASSOCIATES ARCHITECTS, INC.
POST OFFICE BOX 1004
137 EAST WASHINGTON STREET
MONROE, GEORGIA 30655
Fax: 770/267-1064
email@carterwatkins.com www.carterwatkins.com

SEAL
No. 015330

BARTOW COUNTY
FIRE STATION NO. 9
Battalion Headquarters
171 BROWN FARM ROAD, CARTERSVILLE, GEORGIA

SHEET TITLE:
PANELS SCHEDULE, POWER RISER, AND WIRING SCHEDULE

PRINTED: Nov 24, 2014

NUMBER:
E-3

ISSUED FOR CONSTRUCTION. **DATE:** 00 / 00 / 14

ELECTRICAL NOTES

1. CONTRACTOR SHALL NOT RUN ANY WIRES WITHOUT VERIFYING WITH ELECTRICAL CHARACTERISTICS OF EQUIPMENT. DESIGN DOCUMENTS MAY DIFFER FROM ACTUAL ELECTRICAL CHARACTERISTICS OF EQUIPMENT. ENGINEER DOES NOT HAVE ACTUAL EQUIPMENT DATA DURING DESIGN PROCESS. CONTRACTOR SHALL BRING TO ATTENTION OF ENGINEER FOR ANY DISCREPANCIES. CONTRACTOR MUST SUBMIT EQUIPMENT DATA WHICH REQUIRED ELECTRICAL POWER TO ENGINEER. APPROVED EQUIPMENT BY ENGINEER OR ARCHITECT DOES NOT RELIEVE CONTRACTOR FROM RESPONSIBILITY OF VERIFICATION OF ELECTRICAL CHARACTERISTICS OF EQUIPMENT AND MODIFY CIRCUITS AS NECESSARY.

2. CONTRACTOR SHALL VERIFY UTILITY COMPANY'S POWER SUPPLY (VOLTAGES AND PHASE) BEFORE PURCHASING ANY EQUIPMENT, LIGHT FIXTURES AND NOTIFY ENGINEER FOR ANY DISCREPANCIES. CONTRACTOR SHALL SUBMIT ALL EQUIPMENT DATA AND LIGHT FIXTURES FOR APPROVAL.

3. RUN 4 (TWO LIVE WIRES, ONE NEUTRAL, ONE GROUND) WIRES FOR DRYER AND OVENS. THIS NOTE SUPERCEDES NUMBER OF WIRES ON DRAWINGS.

4. ANY EQUIPMENT REQUIRES DUAL VOLTAGES (e.g. 240/120V FOR OVEN AND DRYER OR 277/120 VOLTS WITH CONTROL WIRES), CONTRACTOR SHALL RUN NEUTRAL WIRE

5. PROVIDE GROUND FAULT OUTLET WITHIN 25 FEET OF ALL AIR CONDITIONING EQUIPMENT ON ROOF AND IN THE ATTIC (REGULAR) AS PER NEC CODE 210-8(B) & 210-63. CONNECT TO NEAREST RECEPTACLE CIRCUIT UNLESS OTHERWISE INDICATED.

6. PROVIDE ELECTRICAL CONNECTIONS TO ALL ITEMS SHOWN AS PART OF THE GENERAL CONTRACT WHICH REQUIRES ELECTRICITY.

7. COORDINATE ALL CONNECTIONS WITH EQUIPMENT SUPPLIER FOR EXACT LOCATION AND REQUIREMENTS.

8. PROVIDE CONNECTION TO ALL APPLIANCES, MECHANICAL AND PLUMBING EQUIPMENT INCLUDING TOILET EXHAUST FANS AND UNDER CABINET LIGHTS, SIGNS, ETC.,. CONTRACTOR MUST VERIFY WITH ARCHITECTURAL, INTERIOR, CIVIL, MECHANICAL, AND PLUMBING CONTRACTORS THE QUANTITY OF EQUIPMENT CONNECTIONS BEFORE BIDDING AND FINAL CONTRACT. NEGLIGENCE OF VERIFYING QUANTITY WILL NOT BE COMPENSATED.

9. PROVIDE MINIMUM OF 1/0 COPPER GROUND CONDUCTOR FROM TELEPHONE BACKBOARD TO BUILDING GROUNDING SYSTEM. CONTRACTOR SHALL PROVIDE 8'-0" X 4'-0" X 3/4" THICK FIRE RETARDANT PLYWOOD TELEPHONE BACKBOARD AND 120 VOLT CONVENIENCE DUPLEX OUTLET NEXT TO TELEPHONE BACKBOARD. CONTRACTOR SHALL RUN TWO 4" PVC CONDUIT FROM TELEPHONE BOARD TO THE PUBLIC RIGHT OF WAY OR A POLE. CONTRACTOR SHALL COORDINATE WITH TELEPHONE COMPANY FOR THE THEIR REQUIREMENTS BEFORE FINAL CONTRACT. CONTRACTOR SHALL INFORM ARCHITECT FOR ANY DISCREPANCIES.

10. COORDINATE ALL ELECTRICAL AND COMMUNICATION OUTLETS WITH MILLWORK. IF ACCESS GROMMETS ARE NOT PROVIDED IN COUNTER TOP, INSTALL OUTLETS ABOVE COUNTER.

11. EXPOSED WIRING SHALL BE IN EMT OR RIGID CONDUIT.

12. SEE MECHANICAL DRAWINGS FOR LOCATION OF HEATING AND A/C EQUIPMENT.

13. THIS BUILDING SHALL BE EQUIPPED WITH A FIRE SUPPRESSION SPRINKLER SYSTEM, DESIGNED AND INSTALLED IN ACCORDANCE WITH THE REQUIREMENTS OF NFPA #13 AND ALL LOCAL CODES AND ORDINANCES. COORDINATE THE INSTALLATION OF INDICATED EMERGENCY ALARM DEVICES WITH THE SPRINKLER CONTRACTOR.

14. CONTRACTOR SHALL COORDINATE THE INSTALLATION OF A COMPLETE CABLE TELEVISION SYSTEM WITH OWNER AND LOCAL CABLE TV COMPANY. INSTALL MINIMUM 4" DIA. PVC CONDUIT UNDERGROUND AND UNDER SLAB, FROM BUILDING EXTERIOR TO CABLE TV PANEL IN UTILITY ROOM. CONDUIT SHALL BE INSTALLED WITH LONG RADIUS SWEEPS AND BE STUBBED UP 6" A.F.F. NOTE - MINIMUM CONDUIT SIZE FOR CABLE TV SYSTEM SHALL BE 1" DIA.

15. ALL RECEPTACLES AT GARAGE, VANITY, BATH, KITCHEN COUNTER AREAS, AND WET LOCATION SHALL BE GROUND FAULT INTERRUPTER TYPE.

16. VERIFY EXACT LOCATIONS AND LOADS OF SERVICES TO EQUIPMENT TO BE SUPPLIED BY OTHERS, SUCH AS BUILDING SIGNAGE, LAUNDRY EQUIPMENT VENDING MACHINES, ETC., AS WELL AS ALL MECHANICAL EQUIPMENT.

17. RECESSED LIGHT FIXTURES IN RATED CEILINGS MUST BE PROTECTED OR LISTED FOR USE IN THE RATED ASSEMBLY.

18. ELECTRICAL OUTLETS BOXES ON OPPOSITE SIDES OF RATED WALLS SHALL BE SEPARATED BY A HORIZONTAL DISTANCE OF 24" MINIMUM.

19. MAINTAIN CLEARANCES IN FRONT OF ELECTRICAL EQUIPMENT (TRANSFORMER, PANELS, ETC.) AS REQUIRED BY MANUFACTURER AND NEC CODE 110-26(A). SEE TABLE.26(A)(1). (3'-0" TO 4'-0"). MINIMUM WIDTH 30"OR SIZE OF EQUIPMENT.

20. CONTRACTOR SHALL VERIFY ELECTRICAL CHARACTERISTICS BEFORE RUNNING CONDUIT AND WIRES.

21. SEE ARCHITECTURAL DRAWINGS FOR UNDER CABINET LIGHTING AND PROVIDE NECESSARY CIRCUITS.

22. CONTRACTOR SHALL VERIFY WITH UTILITY COMPANY VOLTAGES AND UTILITY COMPANY'S SCOPE OR WORK.

23. DO NOT INSTALL ANY EXPOSED LAMP FIXTURE IN THE CLOTHES CLOSET AS PER NEC 410-8.

24. FIRE ALARM CONTRACTOR SHALL PROVIDE, INSTALL, AND WIRE DUCT SMOKE DETECTORS. COORDINATE WITH MECHANICAL CONTRACTOR FOR LOCATION. SEE MECHANICAL DRAWINGS AND NOTES.

25. CONTRACTOR SHALL PROVIDE WIRES AND CONDUIT FROM TRANSFORMER TO ELECTRICAL ROOM. SEE SITE PLAN FOR EXACT LOCATION OF TRANSFORMER AND ELECTRICAL POWER RISER FOR WIRES AND CONDUITS SIZES.

26. CONTRACTOR SHALL PAY APPLICATION FEES AND COORDINATION FEES FOR ELECTRICAL TRANSFORMER.

27. COORDINATE WITH THE ELECTRICAL UTILITY AND VERIFY LOCATION AND ORIENTATION OF SERVICE EQUIPMENT AND ASSOCIATED METERING EQUIPMENT.

28. PROVIDE AND INSTALL ALL MATERIALS DESIGNATED BY THE ELECTRICAL UTILITY TO BE FURNISHED BY "CUSTOMER". THIS MAY INCLUDE BUT NOT LIMITED TO, COMPRESSION LUGS FOR TRANSFORMER SECONDARY CONNECTION, CONCRETE PAD FOR SERVICE TRANSFORMER, GROUNDING MATERIAL, METER BASE AND EMPTY CONDUITS FOR PRIMARY LINES.

29. SLEEPING AREAS CIRCUIT BREAKERS SHALL BE ARC-FAULT INTERRUPTER TYPE AS PER NEC-1999, 210-12.

30. PROVIDE SMOKE DETECTOR IN EACH SLEEPING ROOM.

31. PROVIDE 3/4" EMPTY CONDUIT FROM TELEPHONE OUTLET.

32. CONTRACTOR SHALL PROVIDE COMPLETE TELEPHONE WIRING FROM TELEPHONE OUTLETS TO TELEPHONE COMPANY'S MAIN TELEPHONE WIRES. CONTRACTOR SHALL COORDINATE THE SCOPE OF WORK WITH TELEPHONE COMPANY FOR COMPLETE OPERATION OF TELEPHONE SYSTEM.

33. THE BRANCH CIRCUIT FEEDING THE EMERGENCY LIGHT AND EXIT LIGHT (UNIT EQUIPMENT) SHALL BE THE SAME BRANCH CIRCUIT AS THAT SERVING THE NORMAL LIGHTING IN THE AREA AND CONNECTED AHEAD OF ANY LOCAL SWITCHES AS PER NEC CODE 700-12(F).

    a. EMERGENCY AND EXIT LIGHTS CONNECTED TO CIRCUITS CONTROLLED BY TIME CLOCK, OR PHOTOCELL SHALL HAVE BYPASS MEANS TO BE CONTINUOUSLY ENERGIZED WHEN CIRCUIT IS ACTIVE.

    b. CIRCUIT WITH EMERGENCY AND EXIT LIGHTS WITH NO SWITCH, TIME CLOCK OR PHOTOCELL SHALL BE PROGRAMMED TO OPERATE CONTINUOUSLY.

34. PROVIDE ON EVERY CORRIDOR A TWO HEAD BATTERY EMERGENCY LIGHT WITHIN THIRTY FEET OF THE END OF CORRIDOR AND MAXIMUM 60'-0 ON CENTER THROUGH THE CORRIDOR AS PER NFPA 101-7.9.1.2

35. PROVIDE TWO HEAD WALL MOUNTED BATTERY EMERGENCY LIGHT AT EACH EXIT WALKWAYS AS PER NFPA-101-7.9.1.2

36. NO PIPING , DUCT, OR EQUIPMENT FOREIGN TO THE ELECTRICAL INSTALLATION SHALL BE INSTALLED ABOVE THE ELECTRICAL PANEL BOARD, MOTOR CONTROL CENTER, OR SWITCHBOARD.

37. PROTECT PANELBOARDS, TRANSFORMERS, ETC. AS PER NEC CODE 110-27(B).

38. CONTRACTOR SHALL SUBMIT GROUND FAULT PERFORMANCE TESTS TO BUILDING INSPECTOR AND ENGINEER.

39. PROVIDE ATTIC LIGHT IF MECHANICAL EQUIPMENT ARE INSTALLED IN ATTIC OR ABOVE CEILING.

40. PROVIDE APPLICABLE PENETRATION FIRE-STOP SYSTEM AS PER SBC SECTION 705.4.

41. LIGHTING SHALL BE CONTAINED IN CUT-OFF TYPE LUMINARIES AND SHALL BE DIRECTED IN TOWARD THE PROPERTY SO AS NOT TO REFLECT INTO ADJACENT RESIDENTIAL PROPERTIES.

42. COMBINATION HORN STROBE SHALL BE INSTALLED WITHIN 15'-0" OF THE END OF EACH CORRIDOR AND MAXIMUM OF 50'-0" ON CENTER THROUGH OUT THE CORRIDOR AS PER NATIONAL FIRE ALARM CODE SECTION 6-4.4.2.2. (MIN. 90" ABOVE FINISH ED FLOOR AND BELOW THE FINISHED CEILINGS OF NOT LESS THAN 6 INCH.

43. INSTALL MANUAL PULL STATION AT EVERY FIRST FLOOR EXIT . ADDITIONAL MANUAL PULL STATION SHALL BE PROVIDED SO THAT TRAVEL DISTANCE TO THE NEAREST MANUAL PULL STATION SHALL NOT EXCEED OF 200 FT MEASURED HORIZONTALLY ON THE SAME FLOOR. MOUNTING HEIGHT SHALL BE NOT LESS THAN 42" AND NOT MORE THAN 54" ABOVE FINISHED FLOOR. SEE NATIONAL FIRE ALARM CODE SECTION 5-8.1.2

44. PROVIDE FIRE ALARM STROBE LIGHT IN EVERY PUBLIC REST ROOM AND OTHER GENERAL USAGE AREAS (E.G. CLASSROOMS, MEETING ROOMS), HALLWAYS, LOBBIES, AND ANY OTHER AREAS OF COMMON USE AS PER GA. ACCESSIBILITY CODE SECTION 120-3-20-.39

45. INSTALL SMOKE DETECTORS IN ALL COMMON AREAS SUCH AS LOBBIES, STORAGE ROOMS, EQUIPMENT ROOMS, BASEMENTS, ATTICS, SPACE ABOVE THE CEILINGS, CLOSETS, AND OTHER TENANTLESS SPACES. SEE NATIONAL FIRE ALARM CODE SECTION 5-1.4.2

46. CEILING SMOKE DETECTORS SHALL BE INSTALLED IN ALL CORRIDORS. SMOKE DETECTORS SHALL BE INSTALLED WITHIN 15'-0" OF THE END OF EACH CORRIDOR AND MAXIMUM 30'-0" ON CENTER THROUGH OUT THE CORRIDOR.

47. SINGLE STATION SMOKE DETECTORS IN LIVING AREA SHALL NOT BE CONNECTED TO CENTRAL SYSTEM.

48. PROVIDE ON EVERY CORRIDOR A TWO HEAD BATTERY EMERGENCY LIGHT WITHIN THIRTY FEET OF THE END OF CORRIDOR AND MAXIMUM 60'-0 ON CENTER THROUGH THE CORRIDOR.

49. ALL OUTLETS WITHIN SIX FEET OF ANY SINK SHALL BE GROUND FAULT PROTECTION TYPE.

50. ALL POWER OUTLETS LOCATED ADJACENT TO DATA OUTLETS SHALL BE ISOLATED GROUND TYPE.

51. PROVIDE POWER TO ELECTRIC OPERATED DOORS. SEE ARCHITECTURAL PLANS FOR LOCATION AND TYPE.

52. PROVIDE POWER TO DISHWASHER. SEE PLUMBING AND ARCHITECTURAL PLANS.

53. PROVIDE SHUNT-TRIP BREAKER TO COOKING EQUIPMENT UNDER THE KITCHEN HOOD.

54. PROVIDE FIRE SAFE BLANKET WRAP AROUND EACH OUTLET BOX IN FIRE RATED ASSEMBLY TO MAINTAIN ASSEMBLY FIRE RATING.

55. A WRIITEN RECORD OF THE GROUND FAULT PERFORMANCE TEST RESULTS SHALL BE MADE AVAILABLE TO THE COUNTY INSPECTOR OR PLAN REVIEWER.

56. PROVIDE GROUND FAULT PROTECTION TYPE (GFI) RECEPTACLES AT THE FOLLOWING LOCATION:

    a. BATHROOM
    b. KITCHEN COUNTER TOP INCLUDING COMMERCIAL KITCHEN
    c. WITHIN SIX FEET OF ANY SINK
    d. GARAGE (READILY ACCESSIBLE)
    e. OUTSIDE WITH WEATHERPROOF (READILY ACCESSIBLE).
    f. WET LOCATION.
    g. AS PER NEC 210-8.

56. BRANCH CIRCUIT CONDUCTORS:

    WIRES RUN OVER 100 FEET LONG SHALL BE SIZED NEXT SIZE OF WIRE SCHEDULE. THIS APPLIES TO THE ENTIRE CIRCUIT OR CIRCUITS.

57. ALL DISCONNECTING SWITCHES SHALL BE IDENTIFIED AS PER NEC CODE SECTION 110.22.

58. LAY-IN LIGHT FIXTURES SHALL BE SUPPORTED WITH FOUR WIRE HANGERS INDEPENDENT OF THE CEILING GRID SYSTEM AND SECURED TO THE GRID SYSTEM.

59. ALL LIGHT FIXTURES SHALL BE AIR-LOCK TYPE.

60. DO NOT INSTALL ANY ELECTRICAL PANELS OR EQUIPMENT IN MEANS OF EGRESS AREA.

61. PROVIDE LIGHT OCCUPANT SENSING DEVICE OR DUAL SWITCHING OF ALTERNATE ROWS OF LUMINAIRES OR SWITCHING THE MIDDLE LAMP LUMINAIRES INDEPENDENTLY OF THE OUTER LAMP. (SEE SECTION 505-2.2 OF INTERNATIONAL ENERGY CONSERVATION CODE 2006).

DETECTION AND ALARM SYSTEM

PART 1 GENERAL

1 01 SCOPE

A. This specification provides for the requirements for a fire detection and alarm system. The system shall include, but not be limited to, control panel, alarm initiating and indicating peripheral devices, conduit, wire, and accessories required to provide a complete operational system. Connect the new panel to the existing building panel for communications of alarm/trouble signals for alarm activations of either panel to alarm when either system is in alarm.

B. General Conditions, Supplementary Conditions and General Requirements shall govern the work of this section.

1 02 STANDARDS

A. The equipment and installation shall comply with the current applicable provisions of the following standards:

1 National Electric Code, Article 760
2 National Fire Protection Standards
3 Local and State Building Codes
4 All requirements of the Local Authority Having Jurisdiction.

B. The system and all components shall be listed by Underwriters' Laboratories, Inc. for use in fire protection signaling system.

1 03 SUBMITTALS

A. The contractor shall submit documentation showing the type, size, rating, style, catalog number, manufacturers' name, photos, and/or catalog data sheets for all items to ensure compliance with these specifications. Battery size calculations shall also be provided as part of submittal data.

B. Only equipment devices have been shown on the contact drawings. Any specific wiring between equipment shown is not for construction purpose. The contractor shall submit for approval the complete layout of the entire system, showing wiring and all equipment.

C. All equipment proposed as equal to that specified herein, shall conform to the standards herein. For equipment other than specified, the contractor shall supply proof that such substitute equipment does in fact equal or exceed the features, functions, performance, and quality of the specified equipment, and most obtain the architect's or owner's approval in writing ten (10) working days prior to bidding such substitute equipment.

1 04 EQUIPMENT MANUFACTURERS

A. All references to manufacturer's or supplier's model number and other pertinent information herein is intended to establish minimum standards of performance, function and quality. Equivalent equipment form other manufacturers may be substituted for the specified providing the submittal is performed as specified above.

B. General Equipment and Material Requirements.

1. All equipment and material shall be new and unused.
2. All components and systems shall be designed for continuous duty without undue heating or degradation of function or performance.
3. All equipment materials, accessories, devices, and other facilities covered by the specifications or noted on contract drawings and installation specifications shall be the best suited for their intended use and shall be provided by a single manufacturer or, if provided by different manufacturers, recognized as compatible by both manufacturers.

PART 2-PRODUCTS

2.0 1 FIRE ALARM CONTROL PANEL

2.0 1 Alarm detection When a fire alarm condition is detected by the one of the System-initiating devices, the following function shall immediately occur. The System alarm LED shall flash. A local sounding device in the panel shall be activated. The 80-character LCD display shall indicate all pertinent information associated with the alarm and its location. All automatic programs assigned to the alarm point shall be executed and the associated indicating devices and relays activated.

A System trouble detection when a trouble condition is detected by one of the system initiating devices, the following functions shall immediately occur. The System Trouble LED shall flash. A local sounding device in the panel shall be activated. The 80-character LCD display shall indicate all pertinent information associated with the trouble condition and its location. However, unacknowledged must be displayed, the trouble message shall not be displayed on the LCD. The appropriate message shall be sent to CRT and printer.

B Control switch operation:

1 Acknowledge (ACK/STEP) Switch Activation of the control panel Acknowledge switch is response to a single new trouble or alarm condition shall silence the panel sounding device and change the System Alarm or Trouble LEDs from flashing to steady-ON. If additional new alarm or trouble conditions exist in the system, activation of this switch shall advance the display to the next alarm or trouble condition that exists, and shall not silence the local audible device or change the LEDs to steady until all new conditions have been so acknowledge. New alarm conditions shall always be displayed before new trouble conditions. Activation of the Acknowledge displayed on System CRTs and Printers. Occurrence of a new alarm or trouble condition shall cause the panel to resound and the alarm/trouble sequences shall repeat.

2 Signal Silence Switch - Activation of the Signal Silence Switch shall cause all appropriate indicating appliances and relays to return to the normal condition after a condition. The selection of indicating circuits and relays silenced by this switch shall be fully programmable.

3 System Reset Switch Activation of the System Reset Switch shall cause all output devices and circuits, to return to the normal condition. If alarm conditions exist in the system after the System Reset Switch activation, the system shall then resound the alarm conditions.

4 System Test Switch Activation of the System Test Switch shall initiate an automatic test of all intelligent detectors in the system. Such test shall activate the electronics in each intelligent device, simulating an alarm condition. A report summarizing results of this test shall be displayed automatically on the front panel, as well as on any CRTs or printers on the System.

5 Lamp Test Switch Activation of the Lamp Test Switch shall turn on all LED indicators, LCD display and local sounder, and then return to the previous condition.

C Service Aids:

1 Automatic Detector Test The system shall include a special Automatic Detector Test, which permits a serviceman to test all intelligent detectors from the main control panel.
2 Watch-Dog Timers The system shall include independent "Watch-Dog timers to detect and report failure of any microprocessor circuit, memory, or software.

D Field Programming:

1 The system shall be programmable, configurable and expandable in the field Without the need for special tools of PROM programmers and shall not require replacement of memory Ics. All programming may be accomplished through the standard control panel keyboard or through the use of the optional CRT-1 keyboard. All programs shall be stored in non-volatile memory. The programming function shall be entered with a special password that may be selected when the system in installed. The password may be changed to a new value at any time by entering the old password and requesting a password and then lose or forget it, the system shall be designed such that the password may be determined by special procedures available through the system manufacturer.

E Sensitivity Adjust:

1 Means shall be provided for adjusting the sensitivity of any or all-analog intelligent detectors in the system from the keypad or from the CRT keyboard. Sensitivity range shall be within the allowed UL window, and shall be a HIGH/MEDIUM/LOW selection.

F Mechanical Design:

1 The control panel shall be housed in a cabinet designed for mounting directly to a wall or vertical surface. The back box and door shall be constructed of 16-gauge steel with provisions for electrical conduit connections in to the sides and top. The door shall provide a key lock and shall include a glass or other transparent opening for viewing of all indicators. The cabinet shall be approximately 16.125" high, 14.5" wide and 5.5" deep.

G System capacity: The control panel shall provide or be capable of expansion to the following capacities:

1 Total programmable input/output points: 301
2 Intelligent Detectors: 99
3 Addressable monitor/control modules: 99
4 Programmable IAC (bell) circuits in panels: 4
5 Programmable software zones: 99
6 LCD annunciators per system: 4
7 ACS annunciators per system: 10

B Central Processing Module (CPU): The CPU shall communicate with, monitor and control all others modules in the panel. Removal, disconnection or failure of any control panel module shall be detected and reported by the CPU. The CPU shall contain and execute all control-by-event programs for specific action to be taking if a fire situation is detected in the system. Such control-by-event programs shall be held in non-volatile programmable memory, and shall not be lost even if system primary and secondary power failure occurs. The CPU shall also provide a real-time clock for time annotation on the display CRT and printer. The main equipment shall be supplied with a 5-amp power supply. Notifier model AFP-200. Provide UDACT and connect to telephone system. Provide Monitoring for One Year with Owner approval.

2.0 8 SMOKE AND HEAT DETECTORS:

A The detectors shall use the photoelectric (light-scattering) principal to Measure smoke density and shall, on command from the control panel, send data to the panel representing the analog level of smoke density. Notifier model FSP-751 or FST-751 with appropriate Base.

2.0 9 INTELLIGENT DUCT DETECTORS

A The air duct smoke detector shall be 24 VDC operation, accommodate intelligent ionization or photoelectric heads, listed for UL 268A specifically for use in air handling systems. The detector head shall provide continuous sensitivity monitoring and alarm verification from the Fire Alarm Control Panel. The detector shall operate at air velocities of 300 to 4000 feet per minute. The duct detector shall be 4-wire with a reset time of 0.03 seconds maximum, equipped with two sets Form C auxiliary contacts. The housing shall be made of NORYL with a clear polycarbonate cover for convenient visual inspection of sampling the filters. It shall be capable of mounting to either round or rectangular ducts from one foot to twelve feet wide. Powered outputs shall be available for remote LED and sounder/strobe options and have the capability for a remote test station option. Notifier FSD-751P with FRM-1 Relay module, provided with sampling tube sized as appropriate. Provide remote test switch.

B ADDRESSABLE MANUAL STATIONS

1 The addressable manual station shall connect with two wires to tone of the SLC loops. The manual station shall, on command from the control panel, send data the panel representing the state of the manual switch; The manual station shall provide address-setting means using rotary decimal switches and shall also store an internal identifying code, which the control panel shall use to identify the type of device. An LED shall be provided which shall flash the type of device. An LED shall be provided which shall flash under normal conditions, indicating that the Manual Station is operational and in regular communication with the control panel. The LED may be placed into steady illumination by the control panel, indicating that an alarm condition has been detected. The station shall also be key-resettable. Notifier model NBG-12LX.

C ADDRESSABLE CONTROL MODULES

1 The control module shall be used to connect a conventional indicating appliance circuit (AC) of 24 VDC compatible polarized Audio/Visual indicating appliances to one of the SLC loops. The control module shall mount in a standard 4-inch square, 2-1/8" deep electrical box. The IAC may be wired for Style Z or style Y operation. The control module may also be wired as a dry contact (form C) relay. Power for the relay coil shall be provided by the SLC loop to reduce wiring connection requirements. Audio/Visual power shall be provided by a separate loop from the main control panel or from supervised remote power supplies. The control module shall provide address-setting means using rotary decimal switches and shall also store an internal identifying code, which the control panel shall use to identify the type of device. An LED shall be provided which shall flash under normal conditions, indicating that the Control Module is operational and in regular communications with the control panel. Notifier model FCM-1.

D AUDIO/VISUAL DEVICES

1 The horn/strobe shall be UL Listed for use with Fire Protective Signaling Systems and accepted by the local Authority Having Jurisdiction (AHJ). Horn/strobe models shall have a minimum sound output of 90 dBA at 10 feet measured in an anechoic chamber with peak meter response. The strobe shall be multi-candela and meet or exceed the requirements of the Americans with Disabilities Act (ADA). The device shall be 24 VDC nominally and have an acceptable operating range of 18-31 VDC and shall draw no more than 0.225 amps. It shall flush mount to a single or double gang back box. Gentex model GEC3-24WR. Set at minimum 75 candela.
2 Strobes only shall be Gentex GES3-24WR. Set at minimum 75 candela.

PARTS 3 EXCUTION

3.0 1 INSTALLATION

A Installation shall be in strict compliance with manufacturer's recommendations. Consult manufacture for all wiring diagram, schematics, sizes, outlets, etc. before installing conduits and pulling wires.

B Conduit and Conductors: Provide complete wiring and conduit between all equipment. Unless specified otherwise herein, all wire shall be minimum #16 Type TFN (solid) or #14 Type THHN/THWN is separate raceway, maximum 40 % full, or approved fire alarm cable as recommended by manufacturer. If cable used, conduits or proper size shall be installed from all equipment and devices into accessible space; all devices shall be mounted upon and all splices made in Listed Boxes. Wiring splices are to be avoided to the extent possible and transposing or changing colors will not be permitted. All junction boxes shall be labeled as "Fire Alarm System" with decal or approved markings. Comply with all local, state and national codes.

C All equipment shall be held firmly in place. Fastening and supports shall be adequate to support the load with a safety factor or five.

D Fire Alarm Control Panel shall be connected to a separate dedicated branch circuit, maximum 20 amperes. Circuit shall be labeled as "Fire Alarm"

E All field wiring shall be completely supervised. In the event of a primary power failure, disconnected standby battery, disarrangement of any components, or any open circuits in the system; an audible and visual trouble signal will be activated until the system is restored to normal.

F As indicated on the drawings, each zone shall be labeled within the operational program memory of the Fire Alarm Control Panel. Names of the zones shall be coordinated with the Owner, and shall meet with the Owner's approval.

G Fire Sprinkler System(s) shall each be indicated on a separate zone, if applicable.

3.0 2 TESTS AND REPORTS

A The system will be accepted only after a satisfactory test of the entire system has been accomplished by a factory-trained distributor in the presence of a representative of the Authority Having Jurisdiction and the Owner's Representative.

B Contractor shall provide the on-site services of an authorized technical representative of the manufacturer, to supervise all connections and fully test all devices and components of the system as installed. Owner's representative shall be instructed in the proper use and testing of the system.

3.0 2 WARRANTY

A Provide one-year warranty on the entire system including on-site labor during normal working hours at no additional cost to the Owner for a period of twelve (12) months from the date of acceptance.

B Guarantee response to a trouble call within one normal business day after receipt of such call.

3.0 3 FINAL

A Protect finished installation from damage by other trades.
B Remove rubbish and leftover materials from the site.

END OF SECTION

ELECTRICAL SPECIFICATIONS

I. GENERAL

A. PROVIDE ALL LABOR, MATERIALS, EQUIPMENT AND NECESSARY ITEMS AND OBTAIN AND PAY FOR ALL FEES AND PERMITS REQUIRED TO INSTALL A COMPLETE ELECTRICAL SYSTEM.

B. IT IS THE INTENT OF THESE PLANS TO PROVIDE A COMPLETE ELECTRICAL SYSTEM, REGARDLESS OF WHETHER EACH INDIVIDUAL COMPONENT IS MENTIONED OR NOT.

C. THE WORK SHALL COMPLY WITH THE STANDARDS OF THE FOLLOWING CODES AND ORDINANCES:

1. NFPA NO. 70, "NATIONAL ELECTRIC CODE," LATEST ED.
2. NECA "STANDARD OF INSTALLATION"
3. THE ELECTRICAL UTILITY COMPANY SERVICE STANDARDS
4. UNDERWRITER'S LABORATORY STANDARDS
5. OTHER LOCAL CODES, ORDINANCES AND LAWS APPLICABLE TO THE LOCATION OF THIS PROJECT.

D. ELECTRICAL CONTRACTOR SHALL COORDINATE WITH TELEPHONE SYSTEM, CABLE TV, AND SECURITY SYSTEM INSTALLATIONS.

II. MATERIALS AND WORKMANSHIP:

A. THE ELECTRICAL CONTRACTOR SHALL BE RESPONSIBLE FOR TIMELY PLACEMENT OF ALL CONDUITS, OUTLET BOXES, CABINETS, AND OTHER WIRING DEVICES IN FLOORS, WALLS, CEILINGS, ETC. AS THE CONSTRUCTION PROGRESSES.

B. OUTLET BOXES SHALL BE LOCATED AS FOLLOWS:

1. WALL SWITCHES - 4'-0" ABOVE FINISH FLOOR.
2. CONVENIENCE OUTLETS - 16" A.F.F.
3. EQUIPMENT OUTLETS AS REQUIRED (VERIFY)

C. WIRING SYSTEM SHALL BE AS FOLLOWS:

1. RIGID CONDUIT-GALVANIZED STEEL OR RIGID ALUMINUM AS PERMITTED BY N. E. C.

2. EMT- ELECTRIC METALLIC TUBING CONDUIT MAY BE USED ONLY WHERE IT IS NOT SUBJECT TO MECHANICAL DAMAGE AND WHERE PERMITTED BY THE N. E. C. AND LOCAL CODES.

3. FLEXIBLE METAL TUBING - TO BE USED AT CONNECTIONS WHERE REQUIRED. CONNECTIONS SHALL BE MADE WITH GROUND. ALL SUCH CONNECTIONS SHALL BE LIQUID TIGHT.

4. UNDERGROUND CIRCUIT SHALL BE SCHEDULE 40 PVC.

D. CONDUCTORS SHALL BE COPPER, TYPE THWN/THHN.

E. CONVENIENCE RECEPTACLES SHALL BE 15 (20)AMP., 125 VOLT NEMA 5-15(20)R.

F. WALL SWITCHES SHALL BE 20 AMP. 120/277 V. AC, SINGLE POLE OR AS INDICATED ON THE DRAWING.

G. PANELBOARDS SHALL BE BY SQUARE D, SIEMENS, OR GENERAL ELECTRIC.

H. GROUNDING OF ELECTRICAL SYSTEMS SHALL BE IN ACCORDANCE WITH THE NEC AND LOCAL REQUIREMENTS.

I. ELECTRICAL CONTRACTOR SHALL MAKE FINAL CONNECTIONS TO ITEMS SHOWN AS PART OF THE GENERAL CONTRACT WHICH REQUIRE ELECTRICITY-INCLUDING ALL SIGNAGE, BUILDING LIGHTING, AND CONTROL WIRING.

J. FUSES SHALL BE DUEL-ELEMENT CURRENT LIMITING FUSES IN ALL DISCONNECT SWITCHES OR OTHER FUSIBLE DEVICES. FURNISH A SPARE FUSE OF EACH TYPE USED ON THE JOB.

K. ELECTRICAL CONTRACTOR SHALL INSTALL AND CONNECT MOTOR STARTERS, RELAYS, SWITCHES, AND RELATED ITEMS WHICH ARE SUPPLIED BY OTHERS.

L. ALL MATERIAL SHALL BE NEW AND U.L APPROVED AND LABELED.

M. ALL ELECTRICAL EQUIPMENT AND SYSTEMS SHALL BE TESTED AND ADJUSTED FOR PROPER OPERATION. COMPLETE WIRING SYSTEM SHALL BE FREE OF SHORT CIRCUITS.

N. CONTRACTOR SHALL MAKE COMPLETE CONNECTIONS TO ALL EQUIPMENT. COORDINATE WITH EQUIPMENT SUPPLIER FOR EXACT LOCATIONS AND REQUIREMENTS.

O. RUN 3/4"C W/PULL WIRE FROM TV, TELEPHONE AND DATA OUTLETS TO COMPUTER ROOM.

P. RUN 2-4"PVC CONDUITS W/PULL WIRE TO PROPERTY LINE FOR TELEPHONE. COORDINATE W/TELEPHONE UTILITY.

Q. RUN 4" PVC PULL WIRE TO PROPERTY LINE FOR TV CABLE. COORDINATE W/CABLE SUPPLIER.

R. CONTRACTOR MUST SUBMIT EQUIPMENT DATA FOR APPROVAL TO ENGINEER.

ISSUED FOR CONSTRUCTION. DATE: 00 / 00 / 14

REVISIONS

Number	Date:	Remarks:	Number	Date:	Remarks:
X	00-00-00	N/A			

CONSULTANTS

Date Plotted : Nov 24, 2014 - 11:44am
file: 2014-024E2-112014R.DWG

ATLANTA MANAGEMENT AND ENGINEERING CONSULTANTS, INC.
2081 LULLWATER PLACE, LAWRENCEVILLE, GA. 30043
Tel. (770)-962-3636

CARTER WATKINS ASSOCIATES
ARCHITECTS, INC.
POST OFFICE BOX 1004
137 EAST WASHINGTON STREET
MONROE, GEORGIA 30655
Fax: 770/267-1064
email@carterwatkins.com www.carterwatkins.com

SEAL

GEORGIA REGISTERED PROFESSIONAL ENGINEER

BARTOW COUNTY
FIRE STATION NO. 9
Battalion Headquarters
171 BROWN FARM ROAD, CARTERSVILLE, GEORGIA

SHEET TITLE: ELECTRICAL NOTES

PRINTED: Nov 24, 2014

NUMBER: E-4